Oxford Cambridge and RSA

Wednesday 22 May 2024 – Afternoon

AS Level Physics A

H156/02 Depth in physics

Time allowed: 1 hour 30 minutes

You must have:
- the Data, Formulae and Relationships Booklet
- a ruler (cm/mm)

You can use:
- a scientific or graphical calculator

Please write clearly in black ink. **Do not write in the barcodes.**

Centre number | | | | | | Candidate number | | | | |

First name(s) _____

Last name _____

INSTRUCTIONS
- Use black ink. You can use an HB pencil, but only for graphs and diagrams.
- Write your answer to each question in the space provided. If you need extra space use the lined pages at the end of this booklet. The question numbers must be clearly shown.
- Answer **all** the questions.
- Where appropriate, your answer should be supported with working. Marks might be given for using a correct method, even if your answer is wrong.

INFORMATION
- The total mark for this paper is **70**.
- The marks for each question are shown in brackets **[ ]**.
- Quality of extended response will be assessed in questions marked with an asterisk (*).
- This document has **24** pages.

ADVICE
- Read each question carefully before you start your answer.

© OCR 2024 [601/4742/8]
DC (WW/FC) 343584/3
OCR is an exempt Charity

Answer **all** the questions.

1 In space, Asteroid A, called Dimorphos travels at constant speed in a circle around a larger Asteroid B, called Didymos. The diagram shows Asteroid A at position P.

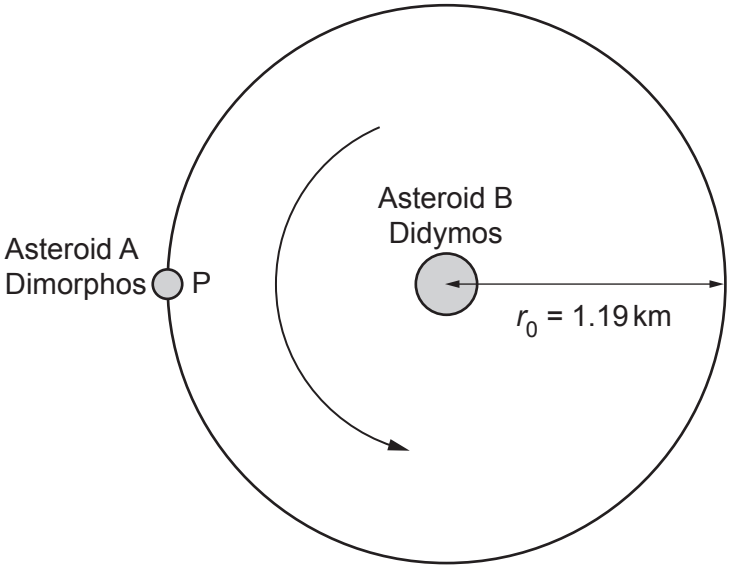

The distance r_0 between Asteroid A and Asteroid B is 1.19 km.
The time T_0 for Asteroid A to travel once around Asteroid B is 4.29×10^4 s (11 hours 55 minutes).

(a) Calculate the average speed v, in $m\,s^{-1}$, of Asteroid A.

v = ... $m\,s^{-1}$ **[2]**

(b) Explain **one** similarity and **one** difference between the velocity of Asteroid A at P and its velocity six hours later.

similarity .....

.....

difference .....

.....

[2]

© OCR 2024

(c) In 2022, the NASA DART mission impact caused Asteroid A to follow a different circular path round Asteroid B.

The new time T_N for Asteroid A to travel once around Asteroid B was reduced by 30 minutes.

(i) Show that the ratio

$$\frac{\text{new time to travel around Asteroid B } T_N}{\text{original time to travel around Asteroid B } T_0}$$

is approximately 0.958.

[1]

(ii) The relationship between the distance r from the centre of Asteroid B to the centre of Asteroid A and the time T for Asteroid A to travel around Asteroid B is

$r^3 \propto T^2$

Calculate the new distance r_N from the centre of Asteroid B to the centre of Asteroid A.
Give your answer in km and to **3** significant figures.

r_N = ... km **[3]**

© OCR 2024

2 In ice hockey, players use a stick to hit an object called a puck, across the surface of the ice. Assume that the frictional force between the ice and the puck is negligible.
The mass of each puck is 0.16 kg.

(a) State Newton's second law of motion.

.....

..... **[1]**

(b) A player hits a single, stationary, puck. The stick is in contact with the puck for a time of 0.033 s and the puck moves at a velocity of 20 m s^{-1} across the ice.

Calculate:

(i) the impulse of the force applied to the puck. Include an appropriate unit.

impulse = ... unit ..... **[2]**

(ii) the average force *F* that the stick exerts on the puck.

F = ... N **[1]**

© OCR 2024

(c) A mass *m* is stuck on top of a second puck B. Puck B is stationary. The single puck travels across the surface of the ice towards B as shown in the diagram.

The single puck collides **elastically** head-on with B.

(i) Explain what is meant by a perfectly elastic collision.

.....

..... **[1]**

(ii) After the collision B travels across the surface of the ice with a velocity of $8.0\,\mathrm{m\,s^{-1}}$.
The velocity of the single puck after the collision is $-12\,\mathrm{m\,s^{-1}}$.
Determine *m*.

m = ... kg **[3]**

© OCR 2024

3* In an experiment, a trapdoor and electromagnet are used to determine the acceleration of free fall of a ball.

The distance the ball falls is h and the time taken for the ball to fall is t.

The experiment is repeated for different values of h.

The table shows the results. Values of $\sqrt{h}$ have been included.

h / m	$\sqrt{h}$ / $m^{\frac{1}{2}}$	t / ms
0.650	0.806	370 ± 5
0.755	0.869	395 ± 5
0.865	0.930	425 ± 5
0.985	0.992	450 ± 5
1.070	1.034	470 ± 5
1.160	1.077	495 ± 5

It is suggested that the relationship between t and h is

$$t = \sqrt{\frac{2}{g}}\sqrt{h} + k$$

where g is the acceleration of free fall and k is a constant.

A graph of t / ms on the y-axis against $\sqrt{h}$ / $m^{\frac{1}{2}}$ on the x-axis is plotted.

QUESTION 3 CONTINUES ON PAGE 8

© OCR 2024

BLANK PAGE

PLEASE DO NOT WRITE ON THIS PAGE

© OCR 2024

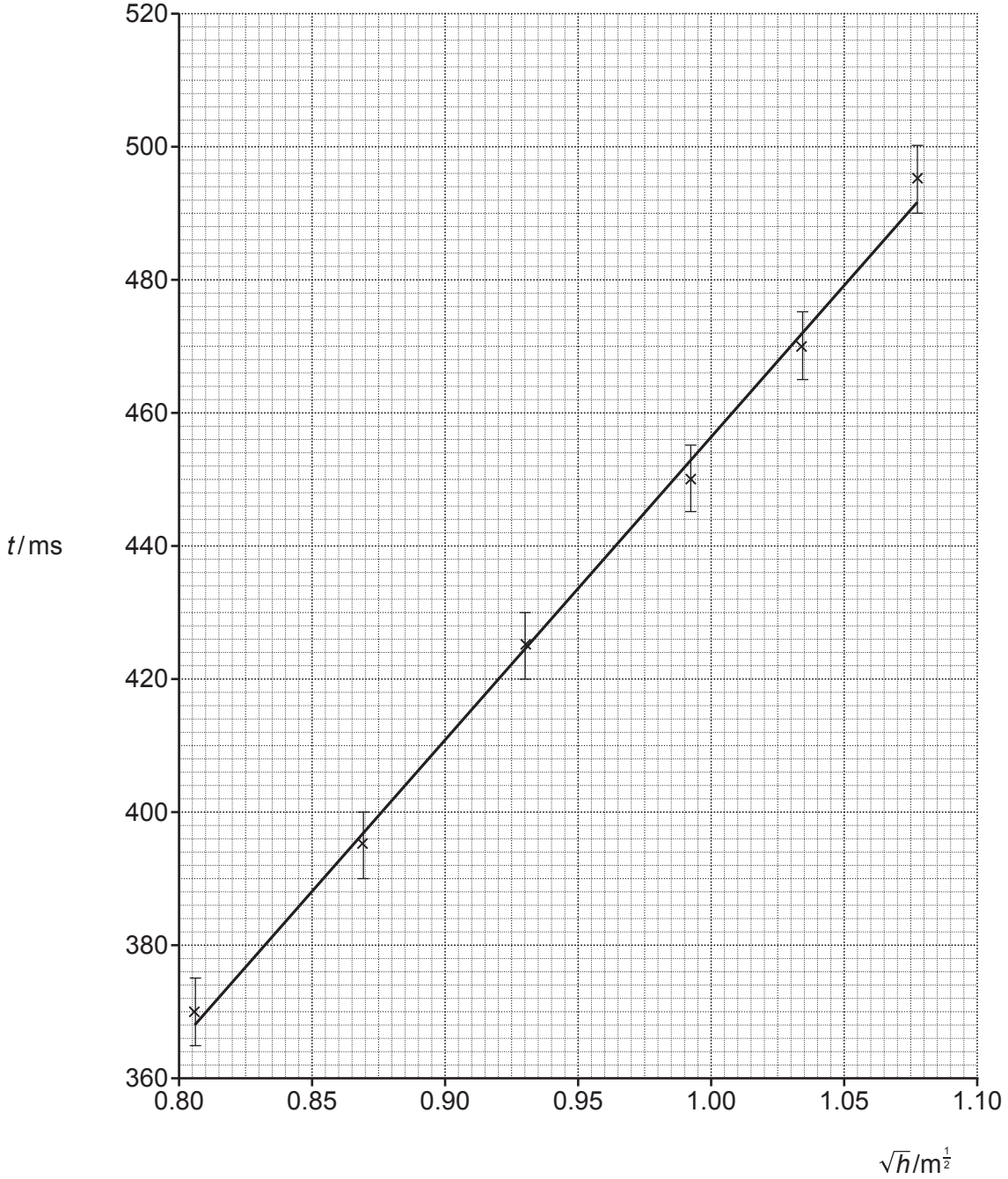

- Describe how to measure *h* and *t*.
- Use the graph to determine *g*, including the percentage uncertainty.

[6]

.....

.....

.....

.....

.....

.....

© OCR 2024

Additional answer space if required

© OCR 2024

4 A solid uniform wooden isosceles prism has a mass of 3.98 kg. The corners of one of the triangular faces are P, Q and R.

Fig. 4.1 (not to scale)

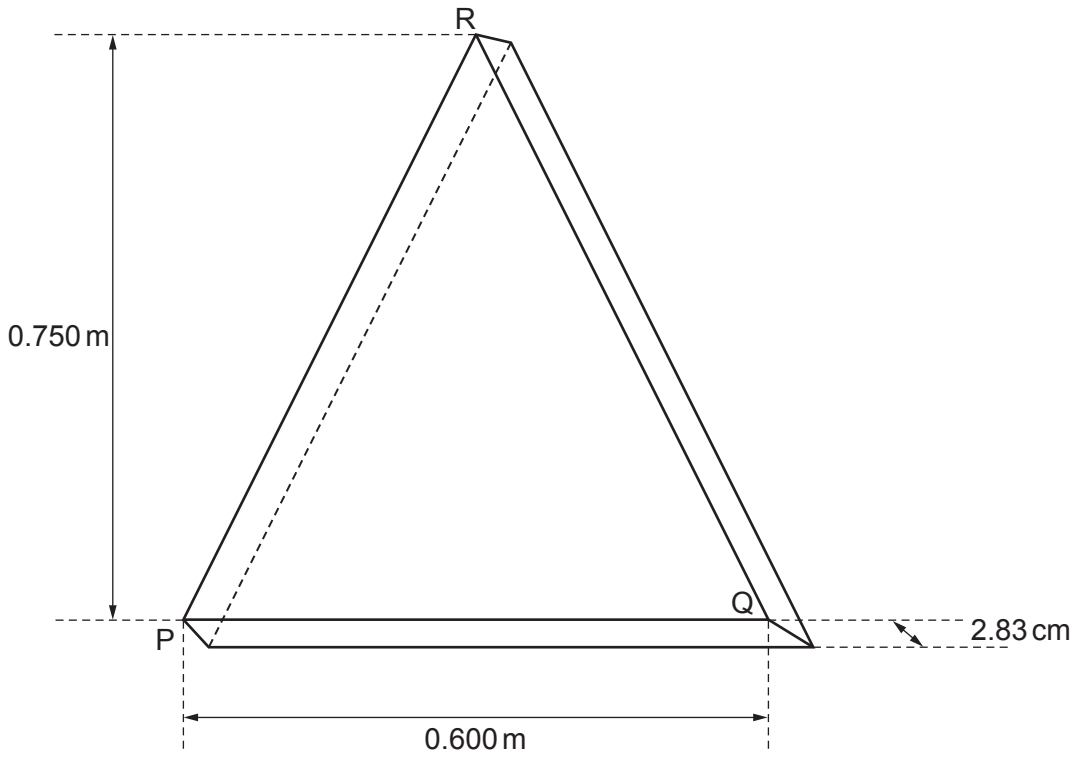

A student determines the thickness of the prism to be 2.83 cm.

(a)
(i) Explain how to determine the thickness of the prism accurately in the laboratory.

.....

.....

..... **[2]**

(ii) Calculate the density ρ of the wood.

ρ = ... kg m^{-3} **[2]**

(b)
(i) Explain what is meant by centre of gravity.

.....

..... **[1]**

© OCR 2024

(ii) **Fig. 4.2** shows a scale drawing of the triangular face.

Fig. 4.2

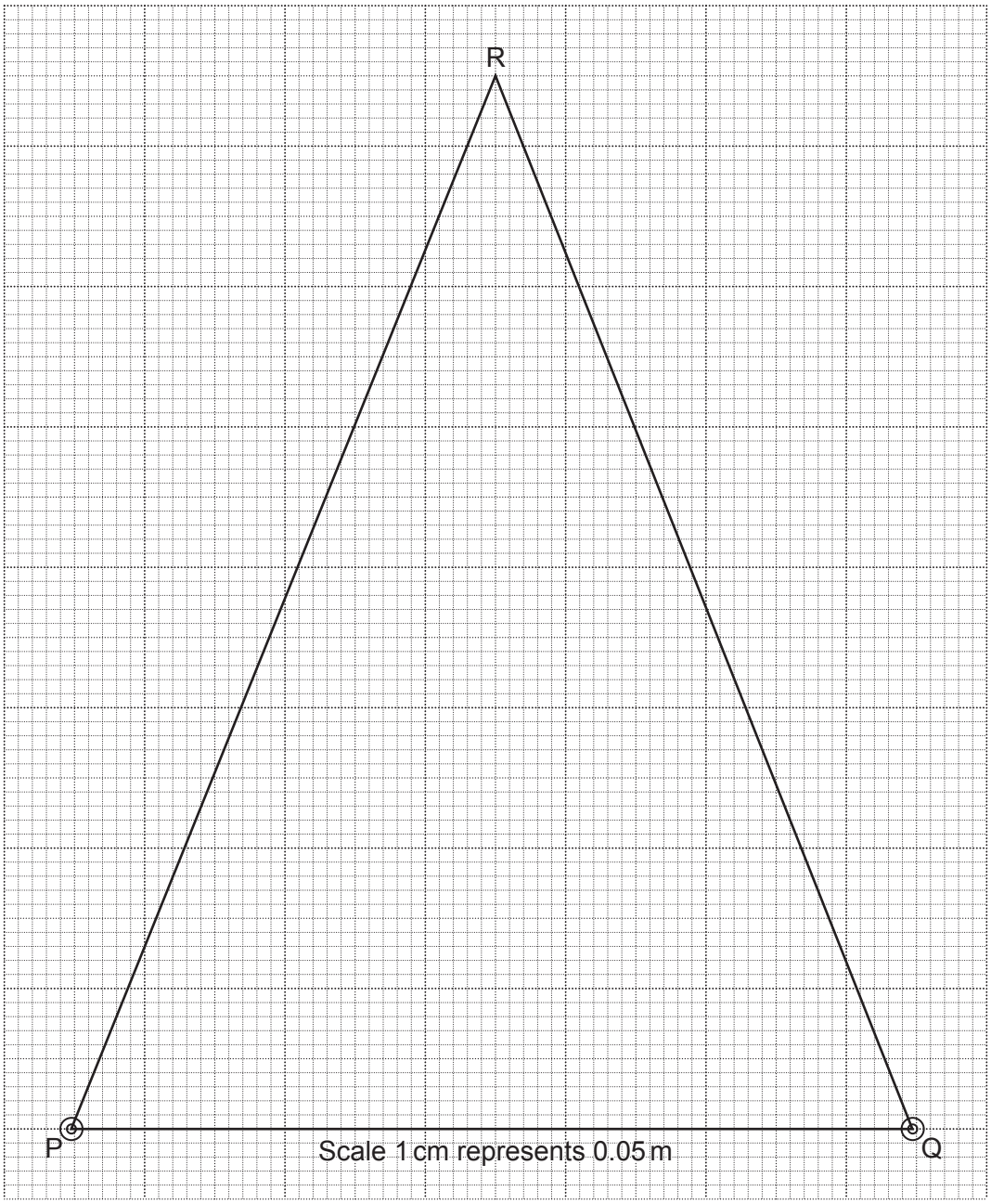

Show that the centre of gravity on the wooden prism is about 0.25 m perpendicularly from the edge of PQ.

In your answer, **draw lines** on **Fig. 4.2**, and label the position of the centre of gravity C on the scale drawing.

[3]

© OCR 2024

(c) The prism rests on a support along edge PQ. **Fig. 4.3** shows a top view and **Fig. 4.4** shows a side view.

Fig. 4.3 (not to scale) top view

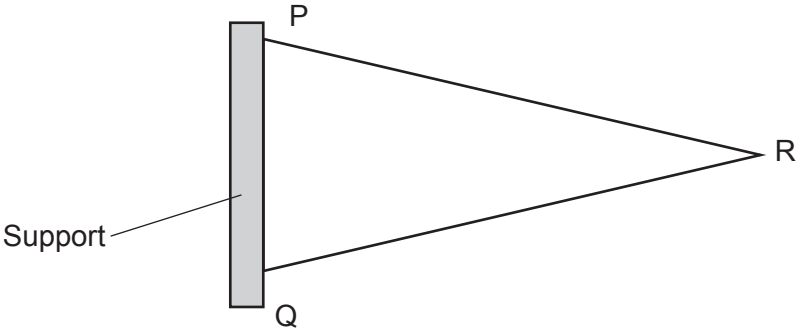

Fig. 4.4 (not to scale) side view

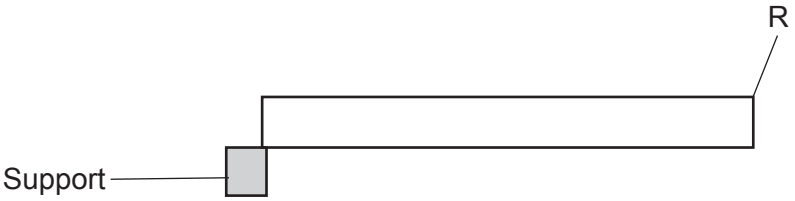

The student applies a force *F* at point R so that the prism is in equilibrium.

(i) State the **two** conditions for the equilibrium of the prism.

1 .....

.....

2 .....

.....

[3]

(ii) Calculate the force *F*.

F = ... N **[3]**

© OCR 2024

BLANK PAGE

PLEASE DO NOT WRITE ON THIS PAGE

© OCR 2024

5 The table shows the speed and wavelength of yellow light in air.

Quantity	Air	Glass
Speed of light / m s^{-1}	3.00×10^8	.....
Wavelength / nm	588	.....
Frequency / THz	.....	.....

The refractive index at the air glass boundary is 1.52.

(a)
(i) Calculate the frequency, in THz, of yellow light in air.

Record your answer in the table.

[1]

(ii) Complete the table for yellow light in glass.

[2]

(b) A student uses a ray box to investigate the refraction of the yellow light in a rectangular glass block.

Fig. 5.1 shows the path the yellow light travels as it enters the block at point P and travels to point Q.

Fig. 5.1

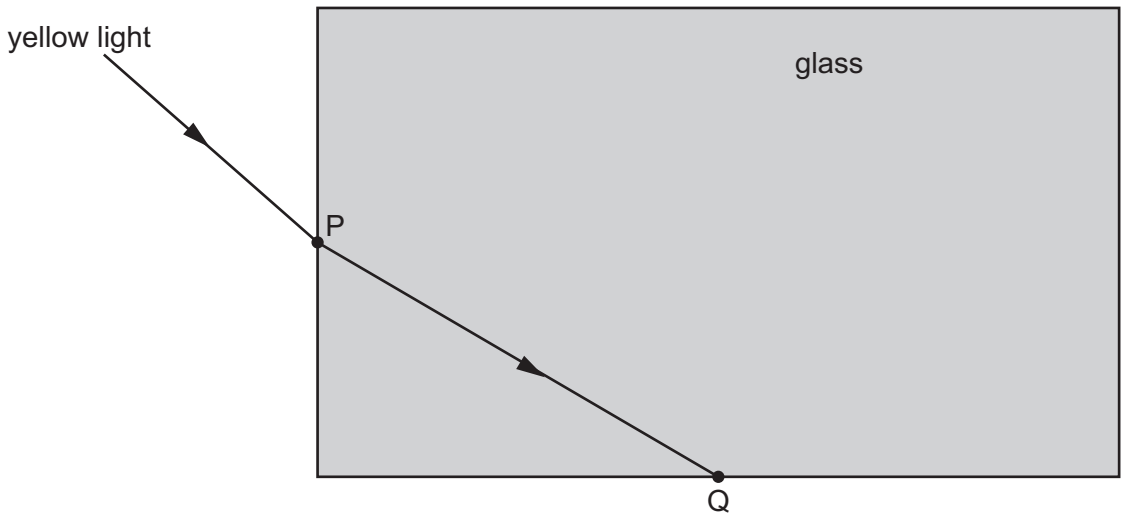

© OCR 2024

(i) **Draw on Fig. 5.1** the angle of incidence *i* and the angle of refraction *r* at point P.
Label the angles *i* and *r*.

[1]

(ii) Describe how the student produces **Fig. 5.1** experimentally using a ray box.

.....

.....

.....

.....

.....

.....

.....

..... **[4]**

(iii) The angle of incidence *i* is 49.9°.

Show that the angle of refraction *r* is approximately 30°.

[1]

(iv) Show that total internal reflection occurs at point Q.

[3]

(v) **Draw on Fig. 5.1** the path of the light as it travels from point Q back into the air.

[1]

© OCR 2024

6 A stationary sound wave is set up in a closed resonance tube as shown in **Fig. 6.1**.

Fig. 6.1

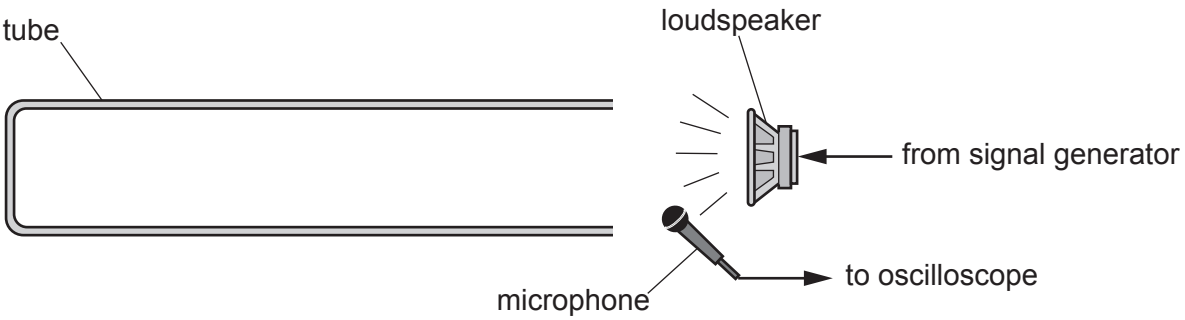

Sound is produced by a signal generator connected to a loudspeaker. The sound is detected by a microphone connected to an oscilloscope.

The time-base setting on the oscilloscope is $1\,\text{ms}\,\text{cm}^{-1}$.

The signal generator is adjusted until the fundamental mode of vibration is detected. **Fig. 6.2** shows the trace on the oscilloscope.

Fig. 6.2

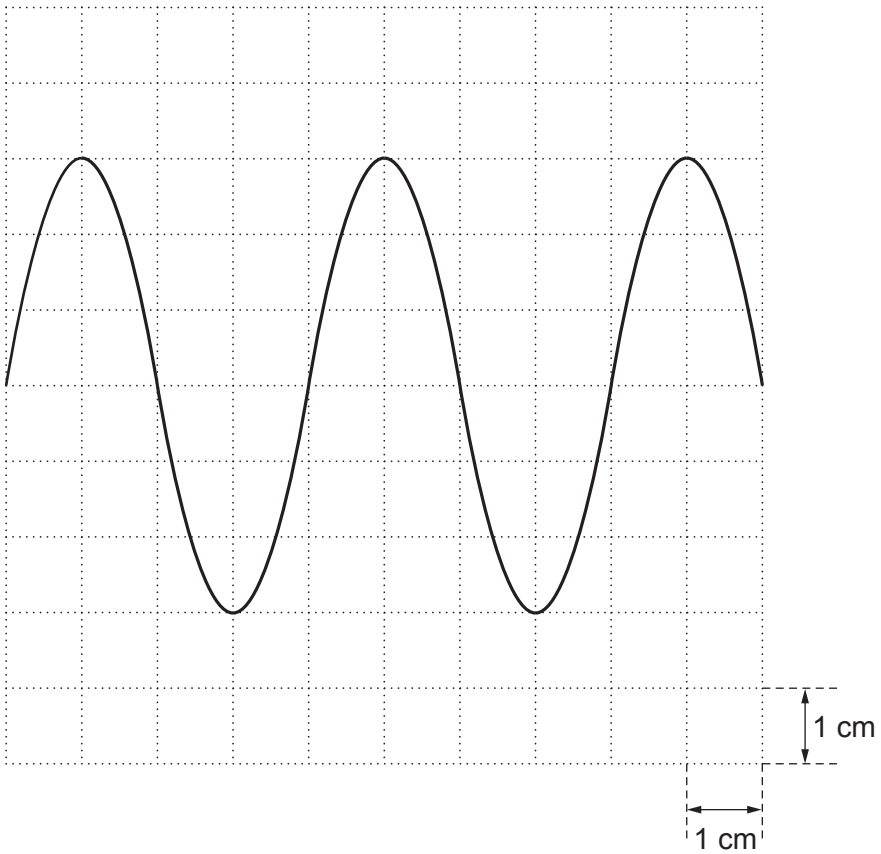

© OCR 2024

(a) Use **Fig. 6.2** to determine the frequency f_0 of the fundamental mode of vibration.

f_0 = ... Hz **[2]**

(b) **Draw on Fig. 6.3** the stationary wave pattern for the fundamental mode of vibration.

Label on **Fig. 6.3** the positions, if any, of any nodes **N** and any antinodes **A**.

Fig. 6.3

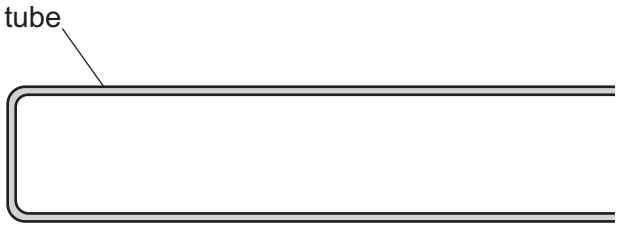

[2]

(c) The frequency of the signal generator is increased until the next harmonic is displayed on the oscilloscope.

Calculate the frequency f_n of the next harmonic.

f_n = ... Hz **[1]**

© OCR 2024

7 A battery of electromotive force (e.m.f.) ε and internal resistance r is connected to five identical wire wound resistors in a circuit.

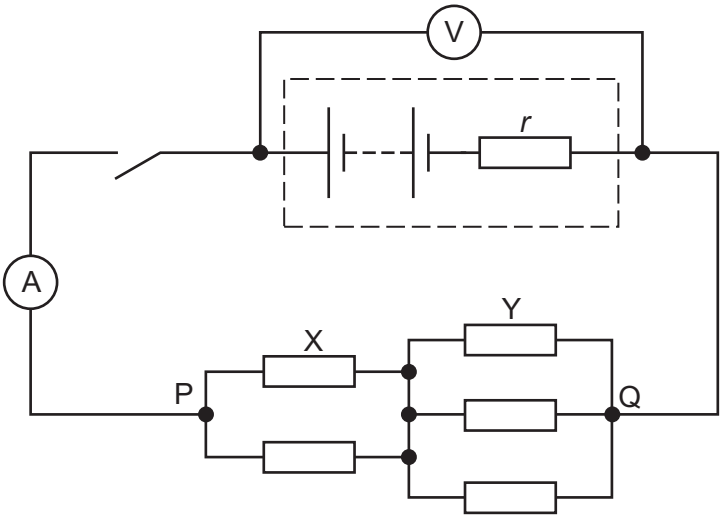

Each resistor between points P and Q has a resistance of 300 Ω. Two of the resistors are labelled X and Y as shown.

The table shows the ammeter and voltmeter readings when the switch is open and when the switch is closed.

Switch position	Ammeter reading	Voltmeter reading
open	0.0 mA	4.57 V
closed	18.0 mA	4.50 V

(a)
(i) Suggest why a student deduces that the e.m.f. ε of the battery has the value of 4.57 V.

.....

..... **[1]**

(ii) Show that the resistance r is approximately 3.9 Ω.

[1]

(iii) Show that the total resistance of the resistors between P and Q is 250 Ω.

[1]

© OCR 2024

(b) The switch is closed for 300 s.

Calculate:

(i) the energy *E* dissipated in *r*.

E = ... J **[1]**

(ii) the number of electrons *N* passing through *r*.

N = ... **[2]**

(iii) the ratio

$$\frac{\text{mean drift speed of electrons in resistor X}}{\text{mean drift speed of electrons in resistor Y}}.$$

ratio = ... **[2]**

(c) Resistor Y is removed from the circuit.

The switch is closed.

Complete the sentences to state the change, if any, in the meter readings.

Choose from **increases**, **decreases**, or **stays the same**.

(i) The ammeter reading

..... **[1]**

(ii) The voltmeter reading

..... **[1]**

© OCR 2024

8* In 1929, the Nobel prize was awarded to Louis de Broglie for his discovery of the wave nature of electrons.

Describe, with the aid of a suitable diagram:

- how an experiment can be safely conducted to demonstrate the wave nature of electrons
- how the observations indicate the wave nature of electrons
- how an estimate of the de Broglie wavelength of the electrons compares with an estimate of the de Broglie wavelength for a car travelling at a speed of 110 Km / h on a motorway.

[6]

Diagram

.....

.....

.....

.....

.....

.....

.....

.....

.....

.....

.....

.....

© OCR 2024

.....

.....

.....

Additional answer space if required

.....

.....

.....

.....

.....

END OF QUESTION PAPER

© OCR 2024

EXTRA ANSWER SPACE

If you need extra space use these lined pages. You must write the question numbers clearly in the margin.

© OCR 2024

© OCR 2024

OCR
Oxford Cambridge and RSA

Copyright Information

OCR is committed to seeking permission to reproduce all third-party content that it uses in its assessment materials. OCR has attempted to identify and contact all copyright holders whose work is used in this paper. To avoid the issue of disclosure of answer-related information to candidates, all copyright acknowledgements are reproduced in the OCR Copyright Acknowledgements Booklet. This is produced for each series of examinations and is freely available to download from our public website (www.ocr.org.uk) after the live examination series.

If OCR has unwittingly failed to correctly acknowledge or clear any third-party content in this assessment material, OCR will be happy to correct its mistake at the earliest possible opportunity.

For queries or further information please contact The OCR Copyright Team, The Triangle Building, Shaftesbury Road, Cambridge CB2 8EA.

OCR is part of Cambridge University Press & Assessment, which is itself a department of the University of Cambridge.

© OCR 2024