Oxford Cambridge and RSA

Wednesday 15 May 2024 – Morning

AS Level Physics A

H156/01 Breadth in physics

Time allowed: 1 hour 30 minutes

You must have:
- the Data, Formulae and Relationships Booklet

You can use:
- a scientific or graphical calculator
- a ruler (cm/mm)
- an HB pencil

Please write clearly in black ink. **Do not write in the barcodes.**

Centre number | | | | | | Candidate number | | | | |

First name(s) _____

Last name _____

INSTRUCTIONS
- Use black ink. You can use an HB pencil, but only for graphs and diagrams.
- Write your answer to each question in the space provided. If you need extra space use the lined pages at the end of this booklet. The question numbers must be clearly shown.
- Answer **all** the questions.
- Where appropriate, your answer should be supported with working. Marks might be given for using a correct method, even if your answer is wrong.

INFORMATION
- The total mark for this paper is **70**.
- The marks for each question are shown in brackets **[ ]**.
- This document has **28** pages.

ADVICE
- Read each question carefully before you start your answer.

© OCR 2024 [601/4742/8]
DC (PQ/SW) 342424/4
OCR is an exempt Charity

Section A

You should spend a maximum of **25 minutes** on this section.

Write your answer to each question in the box provided.

1 Which is an S.I. base unit?

A amp

B coulomb

C ohm

D volt

Your answer ☐ **[1]**

2 Two waves, of wavelength λ, undergo constructive interference.

What is a possible path difference between the two waves?

A $\frac{\lambda}{4}$

B $\frac{\lambda}{2}$

C $\frac{3\lambda}{2}$

D λ

Your answer ☐ **[1]**

© OCR 2024

3 A copper wire **P** has electrical resistance R and number density of charge carriers n.

A copper wire **Q** has:

- area of cross section equal to **P**
- twice the length of **P**.

Which row gives the correct values of resistance and number density of charge carriers for **Q**?

	Resistance of Q	**Number density of charge carriers in Q**
A	$\frac{R}{2}$	n
B	$\frac{R}{2}$	$2n$
C	$2R$	n
D	$2R$	$2n$

Your answer ☐ **[1]**

4 The light emitted by a laptop screen is polarised.

The laptop screen is viewed through a polarising filter.

Initially the brightness of the screen appears normal.

The filter is rotated gradually through an angle of 180°.

How does the brightness of the laptop screen appear after the filter has been rotated by 90°, and then by 180°?

	After a rotation of 90°	**After a rotation of 180°**
A	Dark	Dark
B	Dark	Normal
C	Normal	Dark
D	Normal	Normal

Your answer ☐ **[1]**

© OCR 2024

5 The diagram below shows a network of four resistors.

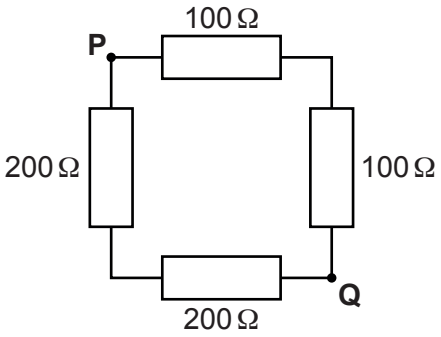

What is the total resistance between the points **P** and **Q**?

A 50 Ω

B 133 Ω

C 150 Ω

D 600 Ω

Your answer ☐ **[1]**

6 The diagram shows a stationary wave on a string.

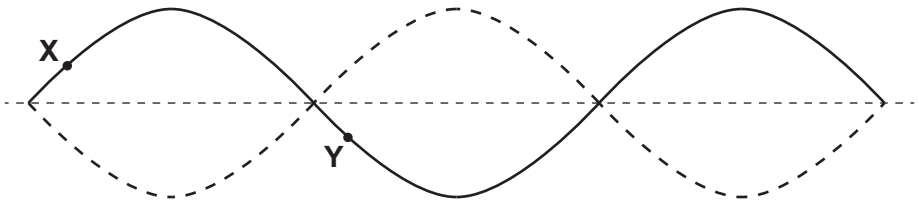

What is the phase difference between the points on the wave labelled **X** and **Y**?

A 0

B $\frac{\pi}{4}$

C $\frac{\pi}{2}$

D π

Your answer ☐ **[1]**

© OCR 2024

7 In a demonstration of the photoelectric effect the clean surface of a metal is radiated with photons of electromagnetic radiation.

Electrons are released from the surface of the metal.

The intensity of the radiation is then increased.

Which statement is correct?

A The energy of the photons increases.

B The rate of emission of electrons increases.

C The maximum kinetic energy of the emitted electrons increases.

D There is no change to the emitted electrons.

Your answer ☐ **[1]**

8 Electromagnetic waves pass through a gap of approximately 3 cm.

Which of the following will undergo a significant amount of diffraction?

A microwaves

B ultraviolet waves

C visible light waves

D X-rays

Your answer ☐ **[1]**

9 According to Newton's third law, forces always occur in pairs.

Which statement is **not** true for a Newton's third law force pair?

A The forces are acting in opposite directions.

B The forces are acting on the same body.

C The forces have the same magnitude.

D The forces are the same type.

Your answer ☐ **[1]**

© OCR 2024

10 A particle **X** collides with a stationary particle **Y**.

No external forces act and the collision is inelastic.

Which quantity is conserved in the collision?

A momentum of **X**

B momentum of **Y**

C momentum of **X** + momentum of **Y**

D kinetic energy of **X** + kinetic energy of **Y**

Your answer ☐ **[1]**

11 The diagrams show the currents entering and leaving a junction in an electric circuit.

Which diagram could be correct?

A

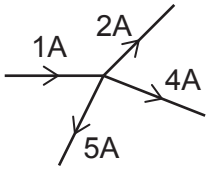

B

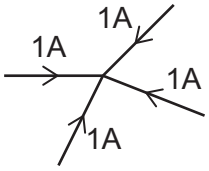

C

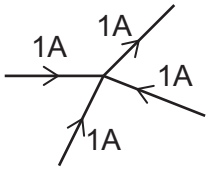

D

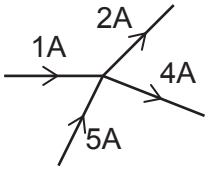

Your answer ☐ **[1]**

12 In the Young double-slit experiment, light passes through two narrow slits and a pattern of light is observed on a screen.

Which property of light is **not** demonstrated by this experiment?

A diffraction

B refraction

C wave nature

D superposition

Your answer ☐ **[1]**

© OCR 2024

13 In a Young double-slit experiment, electromagnetic radiation is incident on a double slit. The following results are obtained.

distance from slits to screen = 3.5 m
distance between slits = 1.5 mm
distance between central fringe and 6th order fringe = 9 mm

What is the wavelength of the radiation?

A 6.4×10^{-7} m

B 3.9×10^{-6} m

C 6.4×10^{-1} m

D 2.3×10^{-5} m

Your answer ☐ **[1]**

14 A stationary sound wave is created in air.

The distance between two adjacent nodes of the stationary wave is 0.7 m.

What is the frequency of the sound wave?

Speed of sound in air = 340 m s^{-1}

A 243 Hz

B 476 Hz

C 486 Hz

D 971 Hz

Your answer ☐ **[1]**

15 A spring has a force constant of 4900 N m^{-1}.

A force is applied to the spring, causing it to compress by 0.50 m.

What is the change in the elastic potential energy stored in the spring?

A decreases by 610 J

B decreases by 1200 J

C increases by 610 J

D increases by 1200 J

Your answer ☐ **[1]**

© OCR 2024

16 Which graph shows the stress-strain characteristics of a brittle material?

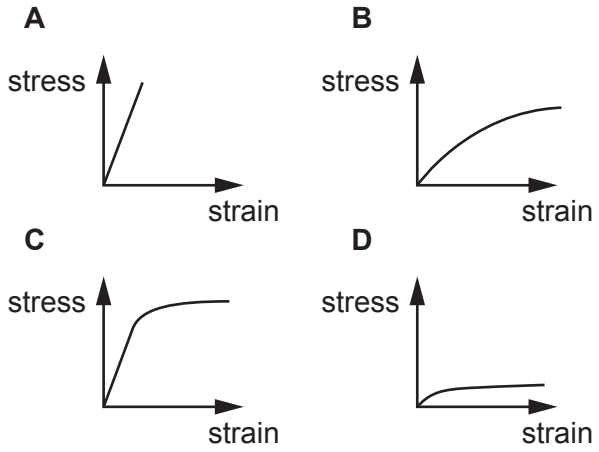

Your answer ☐ **[1]**

17 Which of the following is a correct statement about the e.m.f. of a cell?

A It is equal to the energy transferred from chemical energy per volt.

B It is equal to the energy transferred to thermal energy in the load resistance.

C It is equal to the p.d. measured across the internal resistance of the cell.

D It is equal to the p.d. measured across the terminals of the cell when there is no current.

Your answer ☐ **[1]**

18 The diagram shows a semi-circular glass block with a refractive index of 1.5.

The glass block is surrounded by air.

A ray of light follows the path shown from **X** to **P**.

Which path will the ray follow after it arrives at **P**?

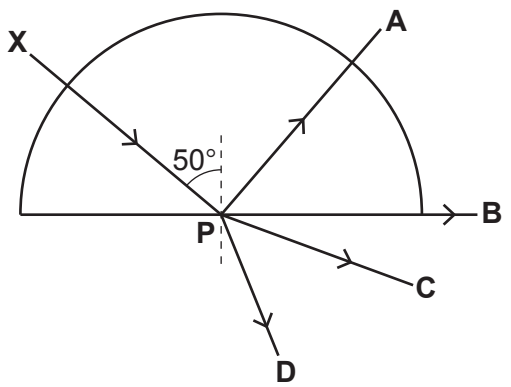

Not to scale

Your answer ☐ **[1]**

© OCR 2024

19 A student makes measurements to determine the total energy *W* transferred by a filament lamp.

They record the measurements shown below.

Potential difference / V	12 ± 0.20
Current / mA	80 ± 1.0
Time / s	60 ± 0.01

What is the percentage uncertainty in their calculated value of *W*?

A 0.2%

B 1.2%

C 2.9%

D 7.2%

Your answer ☐ **[1]**

20 An object is completely immersed in water.

Upthrust acts on the object.

Which calculation will correctly give the magnitude of the upthrust?

A density of the object × *g*

B density of the water × *g*

C mass of water displaced × *g*

D volume of object × *g*

Your answer ☐ **[1]**

© OCR 2024

BLANK PAGE

PLEASE DO NOT WRITE ON THIS PAGE

© OCR 2024

Section B

21 A torch uses three identical cells connected in series to a bulb.

Each cell has e.m.f. ε and internal resistance r.

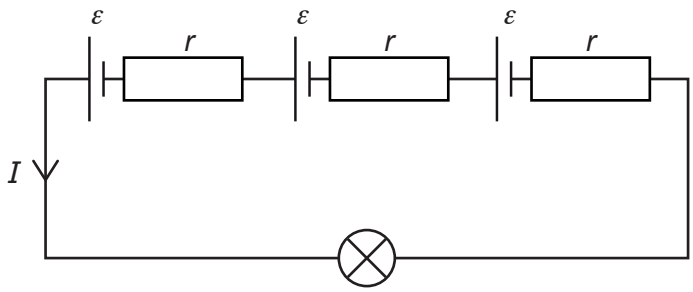

(a) The current in the circuit is I.

Show that the power P delivered to the bulb is given by

$P = 3I(\varepsilon - Ir)$

[3]

(b) Suggest why a torch battery with a large internal resistance may be undesirable.

.....

.....

.....

..... **[2]**

© OCR 2024

22 A lab technician is moving boxes.

(a) The technician pulls a box using a rope with a force of 32 N.

The force acts at an angle of 50° to the horizontal.

The box moves a horizontal distance of 3.5 m along the floor in a time of 6 s.

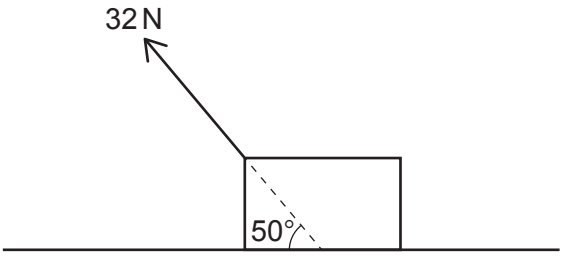

Calculate the power of the technician as they move the box along the floor.

power = ... W **[3]**

(b) The technician lifts a box from the floor without bending their knees.

The diagram shows the force *W* due to the weight of the box.

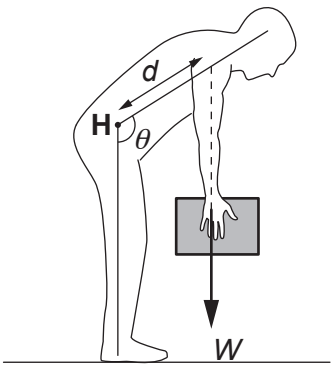

© OCR 2024

The box has a mass of 5 kg.

The distance *d* is 0.6 m and can be assumed to remain constant.

Calculate the moment about the point **H**, due to the weight of the box, when $\theta = 90°$.

State the unit.

moment = ... unit ..... **[2]**

(c) The diagrams show how the technician can pick up the box while bending their knees.

This keeps their spine more vertical.

Explain why bending the knees is less likely to cause damage to the spine.

.....

.....

.....

.....

.....

..... **[3]**

© OCR 2024

BLANK PAGE

PLEASE DO NOT WRITE ON THIS PAGE

© OCR 2024

23 A thermistor has a resistance that decreases as temperature increases.

(a) A student makes measurements to plot the variation of resistance with temperature of the thermistor.

They submerge the thermistor into distilled water at 50 °C.

They then record measurements from a voltmeter and ammeter as the temperature of the water falls to about 20 °C.

Describe how the student obtains sufficient data to plot a graph of resistance against temperature.

Your answer should include a circuit diagram.

.....

.....

.....

.....

.....

..... **[4]**

© OCR 2024

(b) The circuit diagram shows a potential divider circuit using a thermistor to detect changes in temperature.

The LED switches on to indicate when the temperature is above 30 °C.

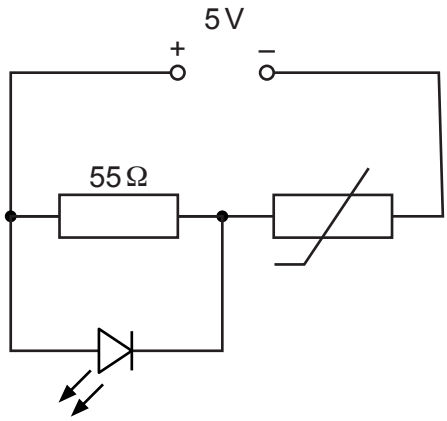

The variation of the resistance *R* of the thermistor with temperature θ is shown below.

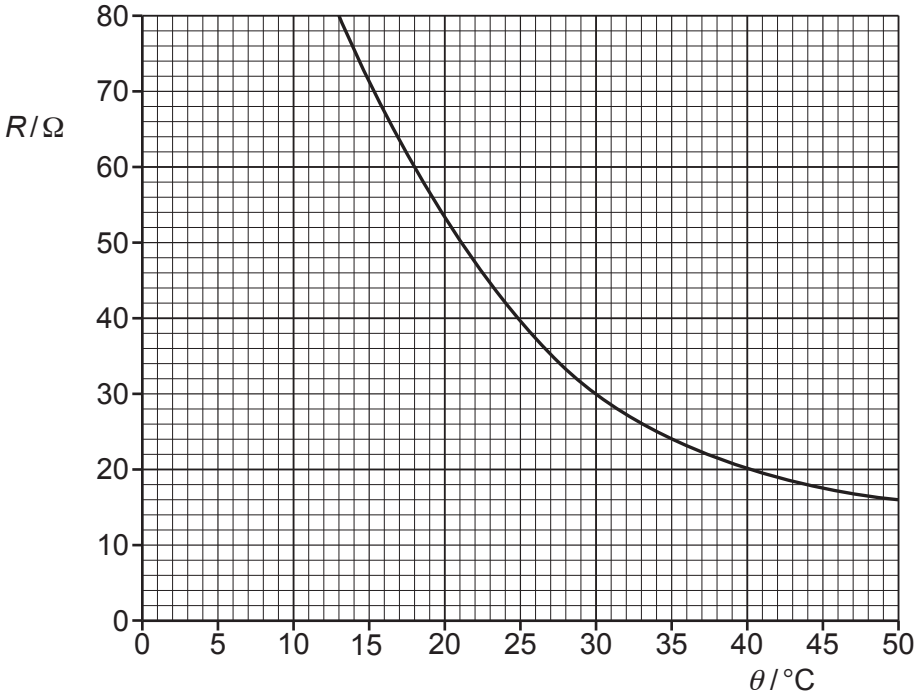

© OCR 2024

The I–V characteristic of the LED, within its operating range, is shown below.

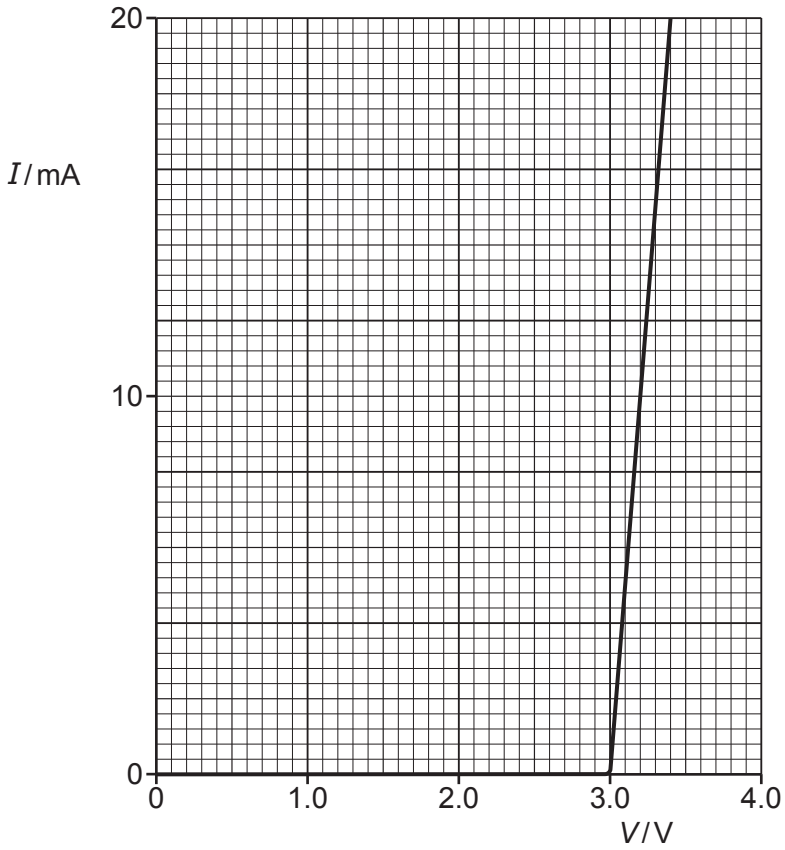

Explain why the LED will switch on when the temperature of the thermistor is above 30 °C.

You may assume that the resistance of the LED is always much greater than 55 Ω.

.....

.....

.....

.....

.....

.....

.....

..... **[4]**

© OCR 2024

24 A student investigates the motion of falling objects.

(a) The student releases a feather in air and allows it to fall.

The feather reaches a terminal velocity.

Explain this observation.

.....

.....

.....

.....

.....

..... **[3]**

(b) The student now releases a heavy ball and allows it to fall from a height of 2.0 m.

Calculate its expected speed when it hits the ground.

Assume that air resistance is negligible.

speed = ... $m\,s^{-1}$ **[3]**

© OCR 2024

(c) The student measures the time for the heavy ball to fall from a height of 2.0 m.

They release the ball and, at the same time, start a stopwatch.

They stop the stopwatch when the ball hits the floor.

The student repeats the measurement and records their results.

Time to fall / s	0.62	0.68	0.60

Calculate a value for g using the student's results.

g = ... $m\,s^{-2}$ **[3]**

(d) Suggest **one** improvement the student could make to the investigation described in **(c)**.

.....

.....

.....

..... **[2]**

(e) The ball bounces when it hits the floor.

On the axes below, sketch a graph of height, h, against time, t, to represent the motion of the ball from the time, $t = 0$ when it is released to the time $t = t_{max}$ when it reaches its maximum height **after** hitting the floor. **[2]**

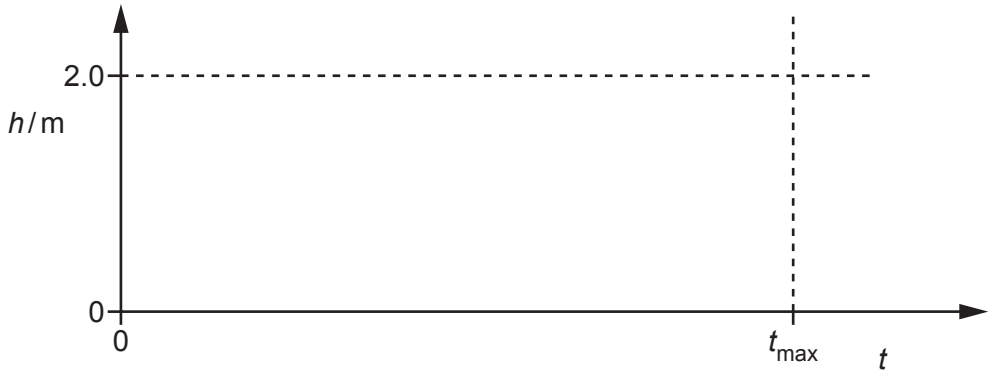

© OCR 2024

25 Einstein's photoelectric equation can be used to explain the photoelectric effect.

$hf = \varphi + KE_{max}$

(a) State what is meant by the quantity KE_{max}.

.....

..... **[1]**

(b) The photoelectric effect can be demonstrated using a gold leaf electroscope.

The electroscope consists of a metal plate attached to a metal rod.

A thin gold leaf is attached to the metal rod.

When the electroscope is charged the leaf rises.

Initially the electroscope has an excess of electrons.

The electroscope is negatively charged and the leaf rises to the position shown below.

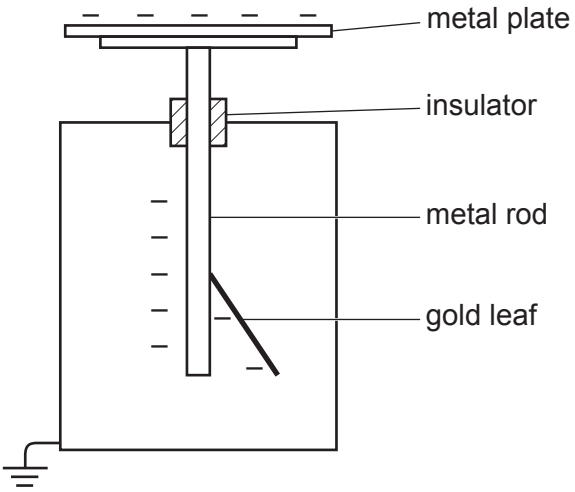

© OCR 2024

Electromagnetic radiation is then directed at the metal plate.

The leaf falls to the position shown below.

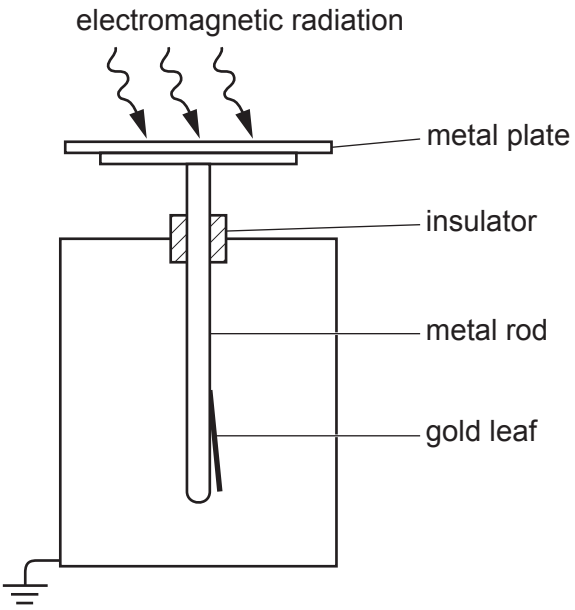

Explain this observation.

.....

.....

.....

.....

.....

..... **[3]**

(c) The investigation is repeated using electromagnetic radiation with a frequency lower than the threshold frequency for the metal.

The leaf does **not** fall.

Explain why.

.....

.....

.....

..... **[2]**

© OCR 2024

BLANK PAGE

PLEASE DO NOT WRITE ON THIS PAGE

© OCR 2024

26 A student carries out an investigation to determine the value of the Planck constant, *h*.

They use the circuit shown below.

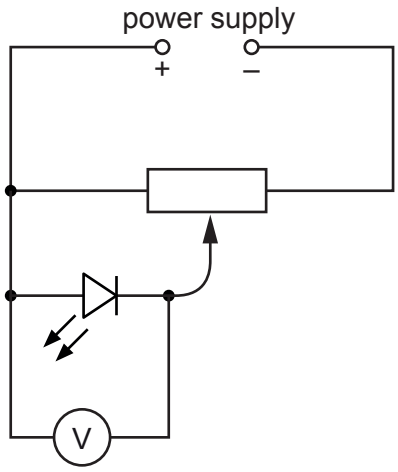

Initially the LED emits no light.

The student slowly increases the p.d. across the LED.

They record the p.d. *V* on the voltmeter when the LED just starts to emit light.

The measurement is repeated for LEDs that emit light with different frequencies *f*.

(a) The student views the LED through a cardboard tube when making each measurement.

Explain how this can help to improve the accuracy of each measurement.

.....

.....

.....

..... **[2]**

© OCR 2024

(b) The student plots a graph of *V* against *f*, as shown below.

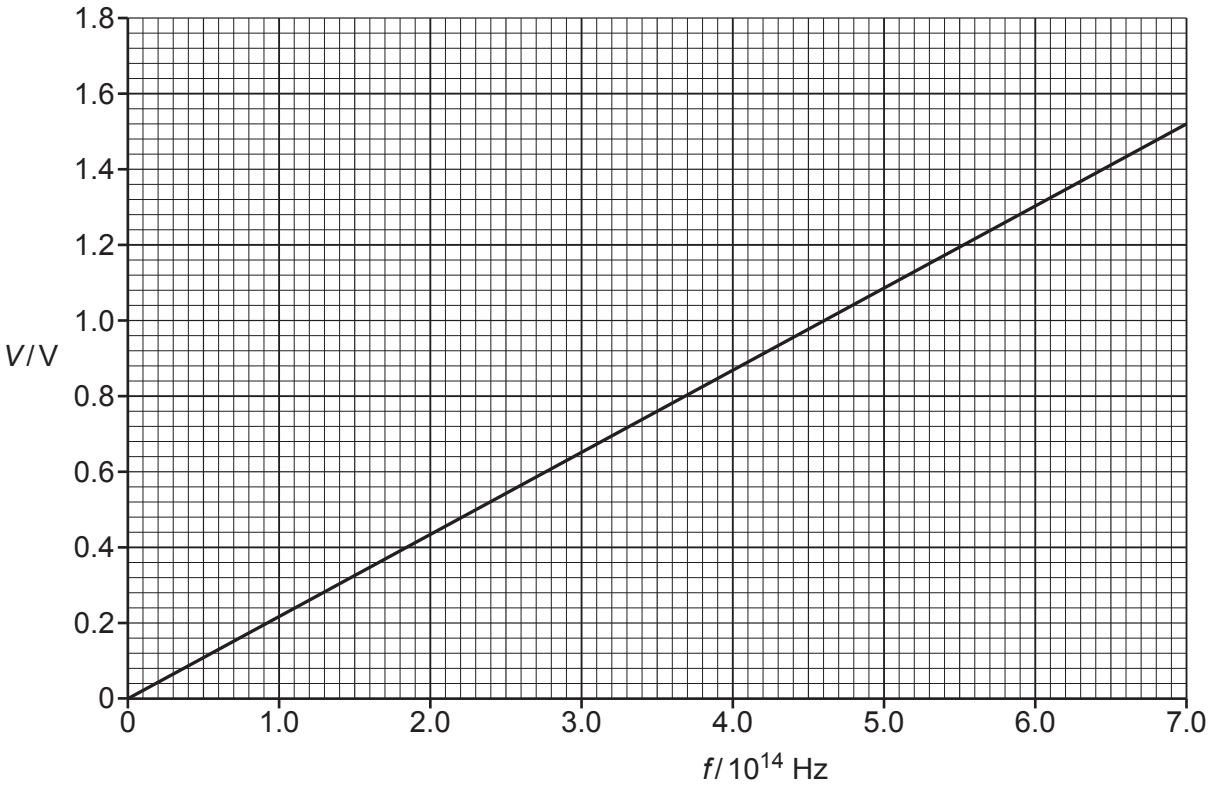

Calculate a value for the Planck constant using the graph.

Planck constant = ...J s **[3]**

© OCR 2024

(c) An accepted value for the Planck constant is 6.63×10^{-34} J s.

Calculate the percentage uncertainty in the student's results.

percentage uncertainty = ... % **[2]**

(d) One of the LEDs emits red light. Another of the LEDs emits blue light.

The red LED emits 3.3×10^{15} photons per second.

The blue LED emits light with frequency 6.38×10^{14} Hz.

The manufacturer lists the power rating of each of the LEDs as 1 mW.

The student states that there are more photons emitted per second from the blue LED than from the red LED.

Deduce, by calculation, whether the student is correct.

Use $h = 6.63 \times 10^{-34}$ J s.

[3]

END OF QUESTION PAPER

© OCR 2024

EXTRA ANSWER SPACE

If you need extra space use these lined pages. You must write the question numbers clearly in the margin.

© OCR 2024

© OCR 2024

OCR
Oxford Cambridge and RSA

Copyright Information

OCR is committed to seeking permission to reproduce all third-party content that it uses in its assessment materials. OCR has attempted to identify and contact all copyright holders whose work is used in this paper. To avoid the issue of disclosure of answer-related information to candidates, all copyright acknowledgements are reproduced in the OCR Copyright Acknowledgements Booklet. This is produced for each series of examinations and is freely available to download from our public website (www.ocr.org.uk) after the live examination series.

If OCR has unwittingly failed to correctly acknowledge or clear any third-party content in this assessment material, OCR will be happy to correct its mistake at the earliest possible opportunity.

For queries or further information please contact The OCR Copyright Team, The Triangle Building, Shaftesbury Road, Cambridge CB2 8EA.

OCR is part of Cambridge University Press & Assessment, which is itself a department of the University of Cambridge.

© OCR 2024