Oxford Cambridge and RSA

Tuesday 14 May 2019 – Morning

AS Level Physics A

H156/01 Breadth in physics

Time allowed: 1 hour 30 minutes

You must have:
- the Data, Formulae and Relationships Booklet (sent with general stationery)

You may use:
- a scientific or graphical calculator
- a ruler (cm/mm)

Please write clearly in black ink. **Do not write in the barcodes.**

Centre number | | | | | | Candidate number | | | | |

First name(s) _____

Last name StemUp Model Solution

INSTRUCTIONS
- Use black ink. HB pencil may be used for graphs and diagrams.
- Answer **all** the questions.
- Where appropriate, your answers should be supported with working. Marks may be given for a correct method even if the answer is incorrect.
- Write your answer to each question in the space provided. If additional space is required, use the lined page(s) at the end of this booklet. The question number(s) must be clearly shown.

INFORMATION
- The total mark for this paper is **70**.
- The marks for each question are shown in brackets **[ ]**.
- This document consists of **20** pages.

© OCR 2019 [601/4742/8]
DC (NF/CB) 173366/5
OCR is an exempt Charity

stemup.co.uk

SECTION A

You should spend a maximum of 25 minutes on this section.

Answer **all** the questions.

Write your answer to each question in the box provided.

1 The table below shows four physical quantities and their units.

Which row is correct?

	Physical quantity	**Unit**
A	strain	pascal
B	charge	coulomb
C	power	joule
D	force constant	newton

Your answer B **[1]**

2 Four students each carry out an experiment to determine the acceleration of free fall *g*.

Which is the **least** accurate value?

A $(9.0 \pm 1.0)\,\mathrm{m\,s^{-2}}$

B $(9.5 \pm 0.1)\,\mathrm{m\,s^{-2}}$

C $(9.6 \pm 0.4)\,\mathrm{m\,s^{-2}}$

D $(9.7 \pm 0.2)\,\mathrm{m\,s^{-2}}$

Your answer A **[1]**

3 A uniform concrete slab is placed on two supports. The slab sags due to its own weight.

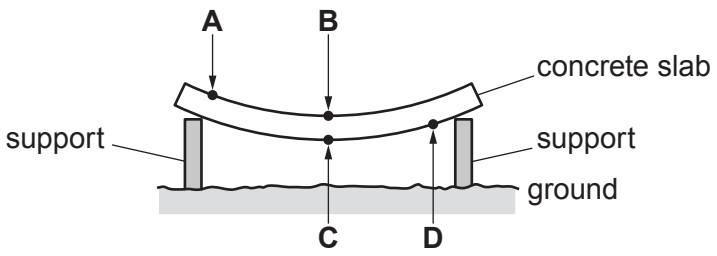

Which point, **A**, **B**, **C** or **D**, of the slab is under maximum compression?

Your answer B **[1]**

© OCR 2019

4 The variation with time t of the force F acting on a ball is shown below.

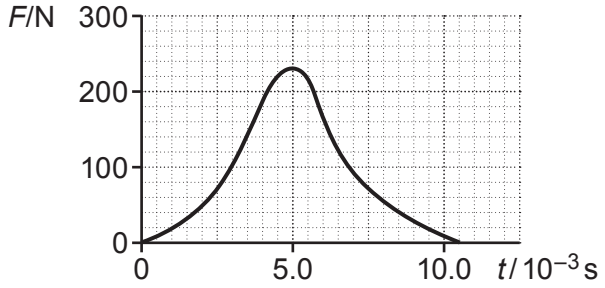

Which statement is **not** correct?

A The area under the graph is equal to the work done by the force F.

B The ball has maximum acceleration at $t = 5.0 \times 10^{-3}$ s.

C The area under the graph is equal to impulse.

D The area under the graph has units kg m s^{-1}.

Your answer A **[1]**

5 The diagram below shows a rotating steam generator.

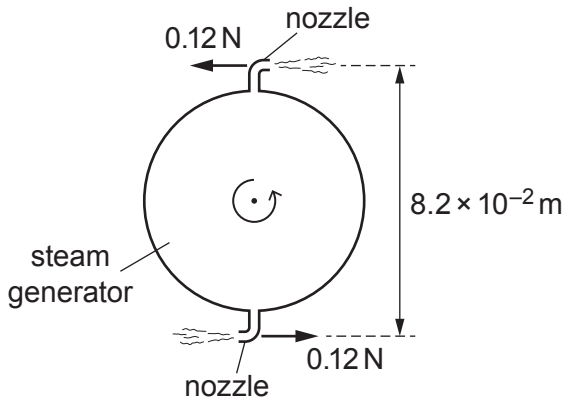

The steam ejected from the nozzles provides a couple. The force at each nozzle is 0.12 N. The perpendicular distance between the nozzles is 8.2×10^{-2} m.

What is the work done by the forces as the steam generator completes one revolution?

A 0 J

B 9.8×10^{-3} J

C 3.1×10^{-2} J

D 6.2×10^{-2} J

Your answer D **[1]**

© OCR 2019

stemup.co.uk

6 Which circuit below can be used to monitor the variation of light intensity in a room?

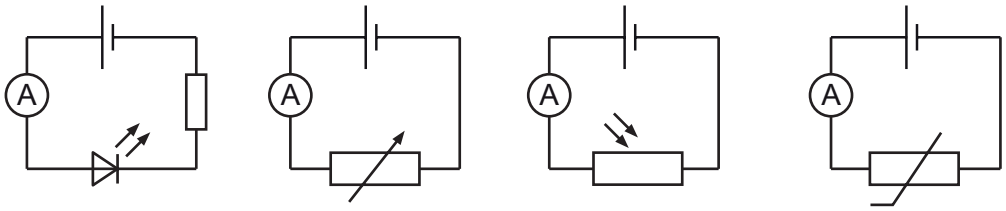

A **B** **C** **D**

Your answer C **[1]**

7 A household is planning to change all their 60 W filament bulbs to 12 W LED bulbs.
The household has a total of 10 bulbs.
Each bulb will be used for about 2000 hours in one year.
The cost of 1 kWh is 15.4 p.

What would the annual saving be?

A £7.39

B £36.96

C £147.84

D £184.80

Your answer C **[1]**

8 A force of 12 N moves an object at an angle θ to the force. The object travels 9.6 m and the work done by the force is 52 J.

What is the angle θ?

A 1.1°

B 27°

C 63°

D 90°

Your answer C **[1]**

© OCR 2019

9 The resistance of a wire of length L is 3.00 Ω.
The wire is extended so that its length becomes 1.50L. Its volume remains the same.

What is the resistance of the extended wire?

A 2.00 Ω

B 3.00 Ω

C 4.50 Ω

D 6.75 Ω

Your answer D **[1]**

10 The diagram below shows a potential divider circuit.

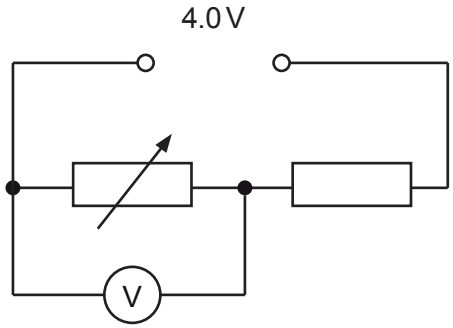

The minimum resistance of the variable resistor is zero and its maximum resistance is 3R, where R is the resistance of the fixed resistor.
The power supply has electromotive force (e.m.f.) 4.0 V and negligible internal resistance. The voltmeter has infinite resistance.

The resistance of the variable resistor is changed from its minimum to its maximum value.

How does the voltmeter reading change?

A from 0 V to 1.0 V

B from 0 V to 3.0 V

C from 1.0 V to 4.0 V

D from 3.0 V to 4.0 V

Your answer B **[1]**

© OCR 2019

stemup.co.uk

11 The waves from the sources **X** and **Y** are coherent and have wavelength 10.0 cm.
The waves are in phase at **X** and **Y**.

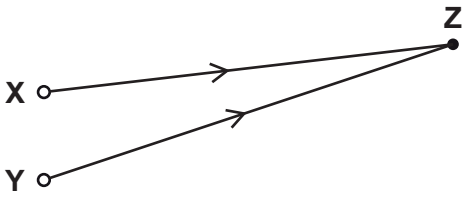

Which row gives the correct conditions for constructive interference at point **Z**?

	Distance XZ / cm	Distance YZ / cm
A	60.0	75.0
B	75.0	95.0
C	90.0	65.0
D	100.0	135.0

Your answer B **[1]**

12 The table shows the refractive index *n* of four transparent materials **A**, **B**, **C** and **D**.

Which material has the **smallest** critical angle?

Material	**A**	**B**	**C**	**D**
n	2.01	1.87	1.60	1.33

Your answer A **[1]**

13 The frictional force acting on an object falling vertically through water is directly proportional to its speed squared.

What is the correct relationship between *P*, the rate of work done against the frictional force, and the speed *v* of the object?

A $P \propto v^{-1}$

B $P \propto v$

C $P \propto v^2$

D $P \propto v^3$

Your answer D **[1]**

© OCR 2019

14 In a particle-accelerator electrons are accelerated through a potential difference of 120 kV. The electron beam current is 8.0 μA.

What is the total energy transferred to the electrons in a time of 2.0 hours?

A 0.96 J

B 120 J

C 1900 J

D 6900 J

Your answer D **[1]**

15 The electric charge on particles is quantised and a multiple of the elementary charge.

Which charge on a particle is possible?

A 1.0×10^{-19} C

B 4.0×10^{-19} C

C 8.0×10^{-19} C

D 8.8×10^{-19} C

Your answer C **[1]**

© OCR 2019

stemup.co.uk

16 Two forces act in the plane of this paper.
The magnitude and direction of the two forces are shown below.

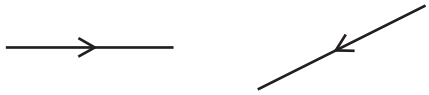

The two forces are added together.

Which diagram shows the correct resultant?

A

B

C

D

Your answer A **[1]**

17 Power has base units $kg\,m^2\,s^{-3}$.

What are the base units for intensity?

A $kg\,s^{-3}$

B $kg\,m\,s^{-3}$

C $kg\,m^2\,s^{-3}$

D $kg\,m^4\,s^{-3}$

Your answer A **[1]**

© OCR 2019

18 A ball of diameter 2.50 cm is held above the ground. The bottom of the ball is 10.2 cm above the ground. The ball is released from rest.
Air resistance has negligible effect on the motion of the ball.

What is the time taken for the ball to reach the ground?

A 0.021 s

B 0.144 s

C 0.152 s

D 0.161 s

Your answer B **[1]**

19 Which of the following waves can be polarised and has a typical wavelength of about a few centimetres?

A microwaves

B ultraviolet

C sound

D visible light

Your answer A **[1]**

20 Stationary sound waves are produced in the air inside a tube. The tube is closed at one end.

Which pattern of nodes (N) and antinodes (A) is likely to be correct?

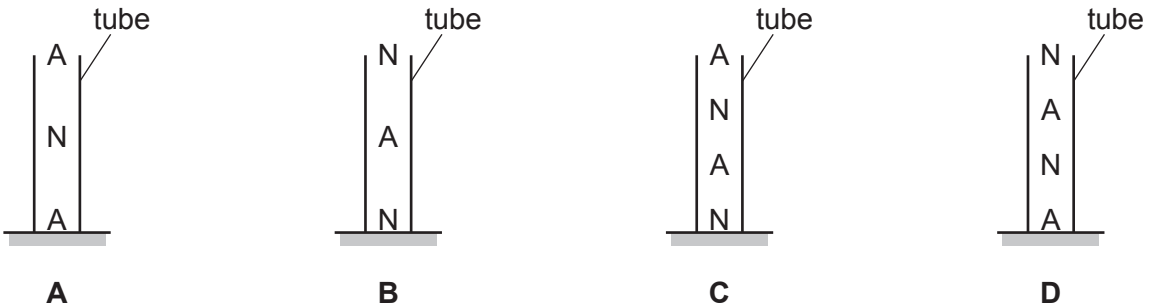

Your answer C **[1]**

© OCR 2019

stemup.co.uk

SECTION B

Answer **all** the questions.

21 **(a)** For a system to be in equilibrium, the resultant force must be zero.

State another condition that must be satisfied for the system to be in equilibrium.

The resultant (net) moment about any point must be zero. ..... **[1]**

(b) Fig. 21.1 shows a ball at **rest** on a horizontal table.

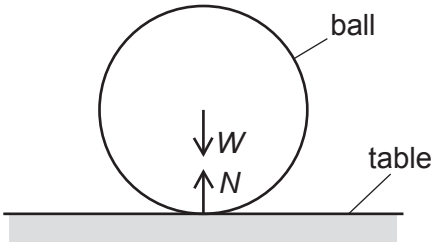

Fig. 21.1

The weight of the ball is *W* and the normal contact force on the ball is *N*.

(i) According to Newton's third law of motion, *W* is one of the forces in a pair of equal and opposite forces.

Name the object that experiences a force of magnitude *W* but in the opposite direction to *W*.

The Earth ..... **[1]**

(ii) According to a student, *W* = *N* is a consequence of Newton's third law of motion.

State why this is incorrect.

The two forces act on the same object (the ball). ..... **[1]**

(c) Fig. 21.2 shows a model dolphin in a museum. The dolphin is held in equilibrium by two cables **A** and **B**.

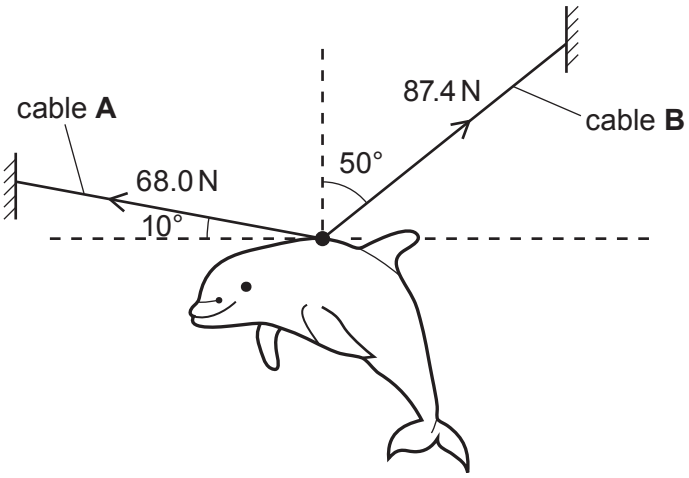

Fig. 21.2

© OCR 2019

The tension in cable **A** is 68.0 N and it makes an angle of 10° to the horizontal. The tension in cable **B** is 87.4 N and it makes an angle of 50° to the vertical.

(i) Calculate the **total** vertical force *F* supplied by cables **A** and **B** by resolving the tensions in cables **A** and **B**.

vertical component of A = 68.0 sin10° = 11.8 N

vertical component of B = 87.4 cos50° = 56.2 N

F = 11.8 + 56.2 = 68.0 N

F = ...68.0..... N **[2]**

(ii) Use your answer from **(i)** to calculate the mass *m* of the dolphin.

in equilibrium, F = weight = mg

68.0 = m × 9.81

m = 68.0 / 9.81 = 6.93 kg

m = ...6.9..... kg **[2]**

(iii) The cables **A** and **B** have the same length and cross-sectional area.
The material of cable **B** has Young modulus 1.29*E*, where *E* is the Young modulus of the material of cable **A**.
Both cables obey Hooke's law.

Calculate the ratio $\frac{\text{extension of cable } \mathbf{B}}{\text{extension of cable } \mathbf{A}}$.

E = stress / strain = (T / A) / (x / L), so x = TL / AE

L and A are the same for both cables

x_B / x_A = (87.4 / 1.29E) / (68.0 / E)

= 87.4 / (1.29 × 68.0) = 0.996

ratio = ...1.0..... **[2]**

© OCR 2019

stemup.co.uk

22 A metal ball is released from rest. It falls vertically towards the ground.
Fig. 22 shows the variation with time t of the displacement s of the ball.

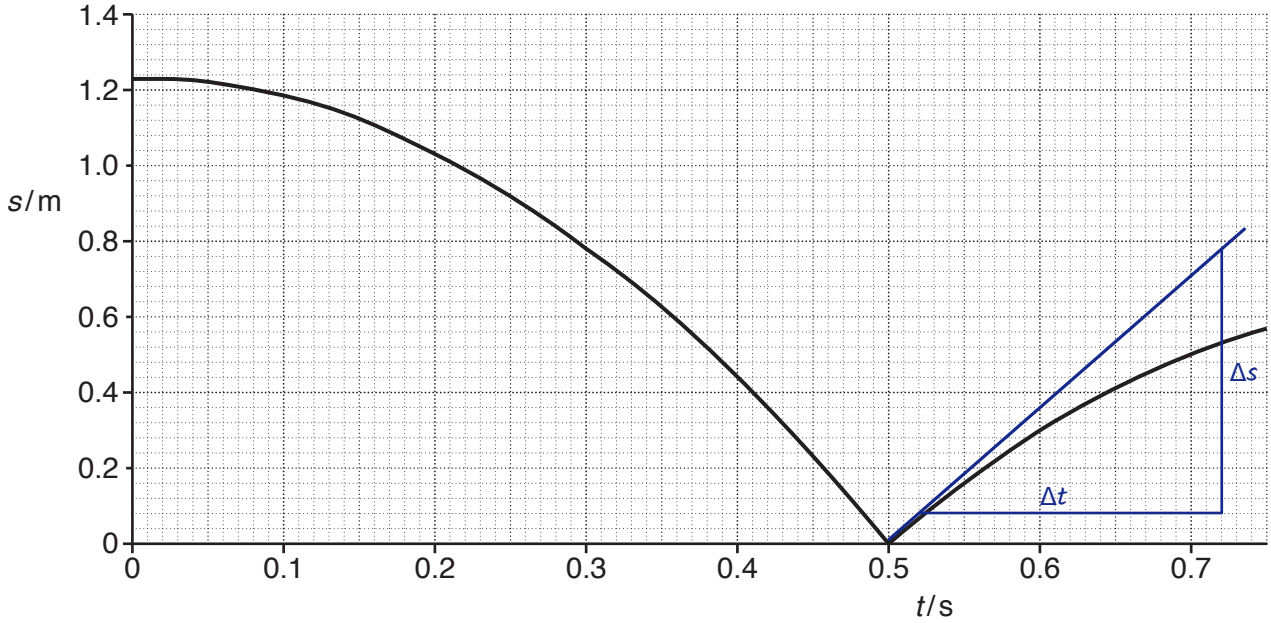

Fig. 22

Air resistance has negligible effect on the motion of the ball.

The ball hits the ground at t = 0.50 s.
During the collision, the ball is in contact with the ground for a time of 1.8 ms.
The mass of the ball is 56 g.

(a) Describe and explain the variation of the velocity of the ball from t = 0.20 s to t = 0.70 s.

No calculations are required.

Velocity = gradient of the s against t graph.

From 0.20 s to 0.50 s the gradient gets steeper, so the speed increases (the ball accelerates).

At 0.50 s the ball hits the ground and the direction of the velocity changes (it bounces up).

After 0.50 s the gradient decreases, so the speed decreases (decelerates).

The speed just after impact is smaller than just before impact.

..... **[4]**

© OCR 2019

(b) Use an equation of motion to show that the speed of the ball is $4.9\,m\,s^{-1}$ just before it hits the ground.

from Fig. 22, distance fallen $s = 1.23$ m, $u = 0$

$v^2 = u^2 + 2as$

$v^2 = 0 + 2 \times 9.81 \times 1.23 = 24.1$

$v = \sqrt{24.1} = 4.9\ m\ s^{-1}$

[2]

(c) Draw a suitable tangent to the curve in Fig. 22 and show that the **rebound** speed of the ball is about $3.5\,m\,s^{-1}$.

tangent drawn to the curve at $t = 0.50$ s (after the bounce)

points on tangent: (0.52 s, 0.07 m) and (0.72 s, 0.77 m)

rebound speed = gradient = $\Delta s / \Delta t$

$= (0.77 - 0.07) / (0.72 - 0.52) = 0.70 / 0.20$

$= 3.5\ m\ s^{-1}$

[3]

(d) Calculate the average resultant force acting on the ball during the collision.

change in velocity $\Delta v = 4.9 + 3.5 = 8.4\ m\ s^{-1}$ (direction reverses)

$F = \Delta p / \Delta t = m\Delta v / \Delta t$

$F = (0.056 \times 8.4) / 1.8 \times 10^{-3} = 261$ N

force = ...260..... N **[2]**

© OCR 2019

stemup.co.uk

23 **(a)** A cell of electromotive force (e.m.f.) 1.4 V and internal resistance 0.62 Ω is connected to resistor **A** and wire **B** as shown in Fig. 23.1.

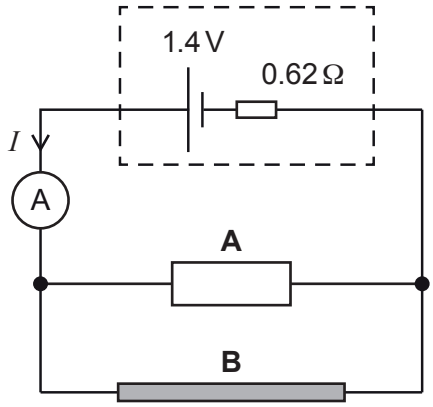

Fig. 23.1

The resistance of resistor **A** is 1.8 Ω and resistance per unit length of wire **B** is 9.5 Ω m^{-1}.
The length of wire **B** is 40 cm.

(i) Calculate the current I in the circuit. Write your value to an appropriate number of significant figures.

$R_B = 9.5 \times 0.40 = 3.8\ \Omega$

parallel: $1/R = 1/3.8 + 1/1.8$, so $R = 1.22\ \Omega$

total resistance $= 1.22 + 0.62 = 1.84\ \Omega$

$I = E / R_{total} = 1.4 / 1.84 = 0.760$ A

(2 s.f., as the data are given to 2 s.f.)

I = ...0.76... A **[4]**

(ii) Calculate the ratio $\dfrac{\text{power dissipated in the internal resistance}}{\text{total power supplied by cell}}$.

$P_{internal} = I^2 r = 0.76^2 \times 0.62 = 0.358$ W

$P_{total} = EI = 1.4 \times 0.76 = 1.064$ W

ratio $= 0.358 / 1.064 = 0.34$

ratio = ...0.34... **[2]**

© OCR 2019

(b) This question is about two identical filament lamps. Fig. 23.2 shows the I-V characteristic of each lamp.

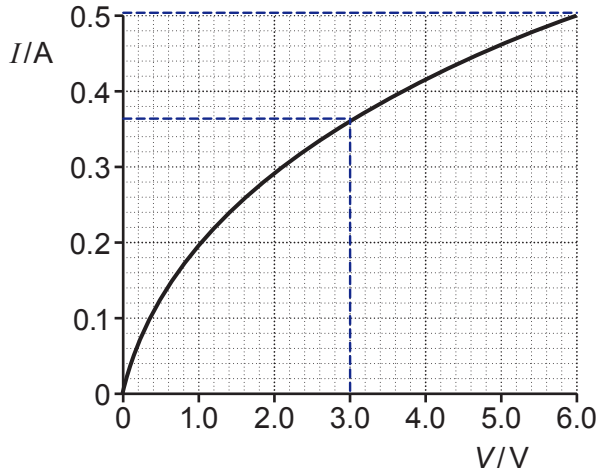

Fig. 23.2

The lamps are connected to a 6.0 V supply of negligible internal resistance in **series**, as shown in Fig. 23.3, and then in **parallel**, as shown in Fig. 23.4.

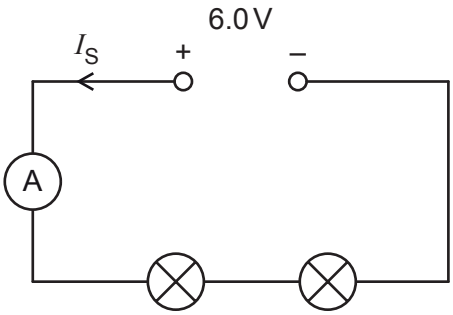

Fig. 23.3

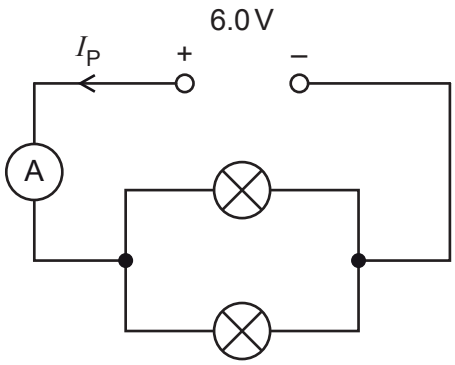

Fig. 23.4

The current from the supply in the series circuit is I_S and the current from the supply in the parallel circuit is I_P.
I_P is found to be almost 3 times greater than I_S.

Use Fig. 23.2 to explain why I_P is almost 3 times greater than I_S.
Show any calculations and your reasoning below.

Fig. 23.3

p.d. is shared equally:

V = 3.0 V across each lamp

from Fig. 23.2, I = 0.36 A

so I_S = 0.36 A

(R = 3.0 / 0.36 = 8.3 Ω each)

Fig. 23.4

p.d. across each lamp = 6.0 V

from Fig. 23.2, I = 0.50 A each

I_P = 2 × 0.50 = 1.0 A

(R = 6.0 / 0.50 = 12 Ω each)

3 × I_S = 3 × 0.36 = 1.08 A ≈ 1.0 A

so I_P ≈ 3 I_S. Not exactly 3, as

lamp R rises with temperature.

[4]

© OCR 2019

stemup.co.uk

24 **(a)** You are provided with a rectangular block of plastic.

Describe how you can use a ray-box (or a laser beam), together with other equipment available in the laboratory, to accurately determine the refractive index of the plastic block.

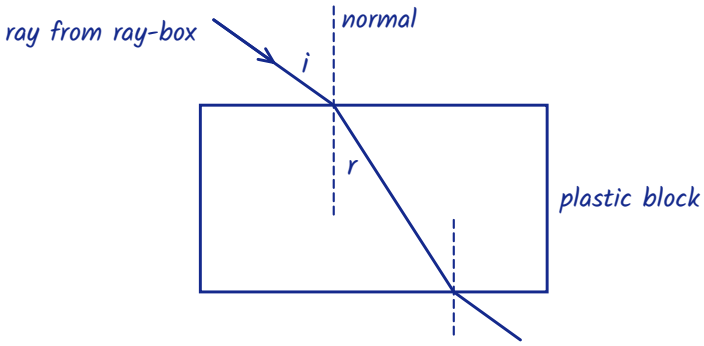

Draw round the block on paper. Shine a narrow ray at the side of the block (in a darkened room) and mark the incident and emergent rays with thin pencil lines; join them to give the refracted ray.

Draw the normal where the ray enters and measure the angle of incidence i and angle of refraction r from the normal using a protractor.

Refractive index n = sin i / sin r. Repeat for several values of i, plot sin i against sin r; n = gradient. **[3]**

(b) The speed of sound in air can be determined by forming stationary waves in the laboratory. Fig. 24.1 shows an arrangement used by a student to determine the speed of sound *v*.

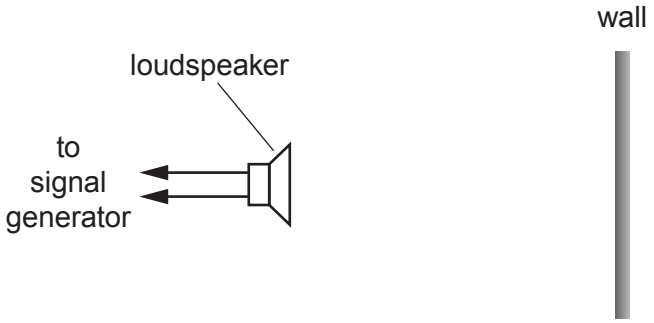

Fig. 24.1

A loudspeaker is placed in front of a smooth vertical wall in the laboratory. The loudspeaker is connected to a signal generator.
Stationary waves of frequency *f* are formed in the space between the wall and the loudspeaker.

A microphone is used to determine the mean separation *L* between adjacent nodes.

© OCR 2019

Fig. 24.2 shows the data plotted by the student.

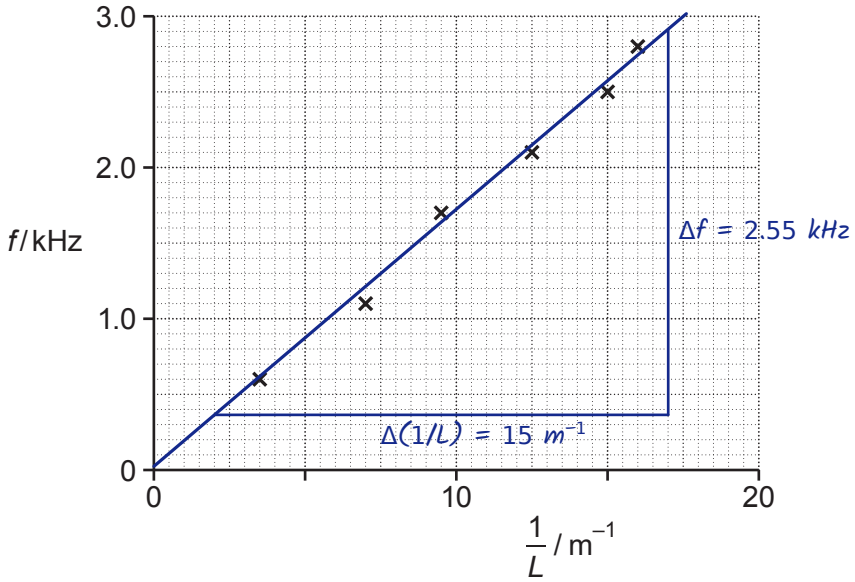

Fig. 24.2

(i) Draw a straight line of best fit and determine the gradient of this line.

gradient = Δf / Δ(1/L)

= (2.89 − 0.34) × 10^3 / (17 − 2)

= 2550 / 15

= 170 Hz m

gradient = ...170..... Hz m **[2]**

(ii) Explain why the gradient of the line is $\frac{v}{2}$, where v is the speed of sound.

v = fλ, and adjacent nodes are λ/2 apart, so λ = 2L

v = 2fL, so f = (v/2) × (1/L)

Compare with y = mx (f against 1/L): a straight line through the origin with gradient = v/2. **[2]**

Question 24 continues on the next page.

© OCR 2019

stemup.co.uk

(iii) Use your answer in **(i)** and the information given in **(ii)** to determine *v*.

$v / 2$ = gradient, so $v = 2 \times$ gradient

$v = 2 \times 170 = 340\ m\ s^{-1}$

v = 340 $m\,s^{-1}$ **[1]**

(iv) The smaller values of *L* are much more difficult to determine with the microphone in this experiment and this produces large percentage uncertainty in the values of $\frac{1}{L}$.
Suggest how this percentage uncertainty may be reduced in this experiment.

Decrease the frequency f of the signal generator, so the wavelength and L increase. A larger L gives a smaller percentage uncertainty (or measure across several nodes and divide). **[2]**

25 **(a)** State **one** piece of evidence for the wave-like behaviour of electrons.

Electron diffraction (by a thin layer of graphite / matter). **[1]**

(b) In an electron-gun, each electron is accelerated to a maximum kinetic energy of 210 eV.

(i) Show that the final speed of each electron is about $9 \times 10^6\,m\,s^{-1}$.

$KE = 210\ eV = 210 \times 1.60 \times 10^{-19} = 3.36 \times 10^{-17}\ J$

$\frac{1}{2}mv^2 = KE$

$\frac{1}{2} \times 9.11 \times 10^{-31} \times v^2 = 3.36 \times 10^{-17}$

$v^2 = 7.38 \times 10^{13}$

$v = 8.6 \times 10^6\ m\ s^{-1}$ (about $9 \times 10^6\ m\ s^{-1}$)

[3]

© OCR 2019

(ii) Calculate the de Broglie wavelength λ of each electron.

$\lambda = h / mv$

$\lambda = 6.63 \times 10^{-34} / (9.11 \times 10^{-31} \times 8.6 \times 10^{6})$

$\lambda = 8.5 \times 10^{-11}$ m

λ = 8.5×10^{-11} m **[2]**

(c) Electromagnetic waves interact with matter as photons.

Explain the photoelectric effect using ideas of **photons**, **conservation of energy** and **work function**.

Electromagnetic radiation is made of photons, each with energy $E = hf$. One photon interacts with one electron at the surface of the metal and transfers all of its energy to it.

The work function φ is the minimum energy needed to remove an electron from the surface of the metal.

By conservation of energy: energy of photon = work function + maximum kinetic energy of the electron, $hf = \varphi + KE_{max}$.

So an electron is only removed (photoelectric effect occurs) when the energy of the photon is greater than or equal to the work function ($hf \geq \varphi$); if $hf < \varphi$ no electrons are emitted, however intense the radiation.

[4]

END OF QUESTION PAPER

© OCR 2019

ADDITIONAL ANSWER SPACE

If additional space is required, you should use the following lined page(s). The question number(s) must be clearly shown in the margin(s).

OCR
Oxford Cambridge and RSA

Copyright Information

OCR is committed to seeking permission to reproduce all third-party content that it uses in its assessment materials. OCR has attempted to identify and contact all copyright holders whose work is used in this paper. To avoid the issue of disclosure of answer-related information to candidates, all copyright acknowledgements are reproduced in the OCR Copyright Acknowledgements Booklet. This is produced for each series of examinations and is freely available to download from our public website (www.ocr.org.uk) after the live examination series.

If OCR has unwittingly failed to correctly acknowledge or clear any third-party content in this assessment material, OCR will be happy to correct its mistake at the earliest possible opportunity.

For queries or further information please contact The OCR Copyright Team, The Triangle Building, Shaftesbury Road, Cambridge CB2 8EA.

OCR is part of the Cambridge Assessment Group; Cambridge Assessment is the brand name of University of Cambridge Local Examinations Syndicate (UCLES), which is itself a department of the University of Cambridge.

© OCR 2019