Oxford Cambridge and RSA

Monday 12 October 2020 – Morning

AS Level Biology B (Advancing Biology)

H022/01 Foundations of biology

Time allowed: 1 hour 30 minutes

You can use:
- a scientific or graphical calculator
- a ruler (cm/mm)

Please write clearly in black ink. **Do not write in the barcodes.**

Centre number | | | | | | Candidate number | | | | |

First name(s) _____

Last name _____

INSTRUCTIONS
- Use black ink. You can use an HB pencil, but only for graphs and diagrams.
- Write your answer to each question in the space provided. If you need extra space use the lined pages at the end of this booklet. The question numbers must be clearly shown.
- Answer **all** the questions.
- Where appropriate, your answer should be supported with working. Marks might be given for using a correct method, even if your answer is wrong.

INFORMATION
- The total mark for this paper is **70**.
- The marks for each question are shown in brackets **[ ]**.
- This document has **28** pages.

ADVICE
- Read each question carefully before you start your answer.

© OCR 2020 [601/4721/0]
DC (CJ/CGW) 206463/6 **R**
OCR is an exempt Charity

BLANK PAGE

PLEASE DO NOT WRITE ON THIS PAGE

© OCR 2020

SECTION A

You should spend a maximum of 25 minutes on this section.

Write your answer for each question in the box provided.

Answer **all** the questions.

1 Which of the following cell structures, **A** to **D**, are present in prokaryotic cells?

A lysosomes

B vacuoles

C ribosomes

D starch grains

Your answer ☐

[1]

2 A student observed a stained blood smear using a light microscope and wrote the following description about one of the blood cells:

- large cell
- nucleus with three lobes stained dark blue
- cytoplasm stained pale blue
- cell surface membrane present.

Which of the blood cells, **A** to **D**, is being described?

A monocyte

B neutrophil

C lymphocyte

D erythrocyte

Your answer ☐

[1]

© OCR 2020

3 The diagram shows an eyepiece graticule and stage micrometer used to measure the length of a mitochondrion.

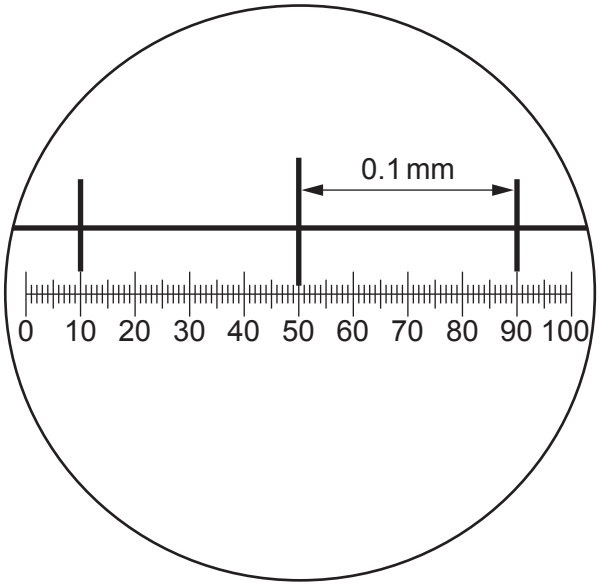

The mitochondrion was measured at 4 eyepiece graticule units.

Which of the options, **A** to **D**, is the **actual** length of the mitochondrion?

A 10 mm

B 10 μm

C 0.4 mm

D 40 μm

Your answer ☐

[1]

© OCR 2020

4 A student was investigating the effect of cell size on the rate of diffusion using four different model cells.

He calculated the surface area of each cell as:

cell **A** = 24 cm^2
cell **B** = 40 cm^2
cell **C** = 13 cm^2
cell **D** = 31 cm^2

volume of cylinder = $\pi r^2 l$
volume of cuboid = $h b l$

Which of the model cells, **A** to **D**, has a surface area to volume ratio of **4 : 1**?

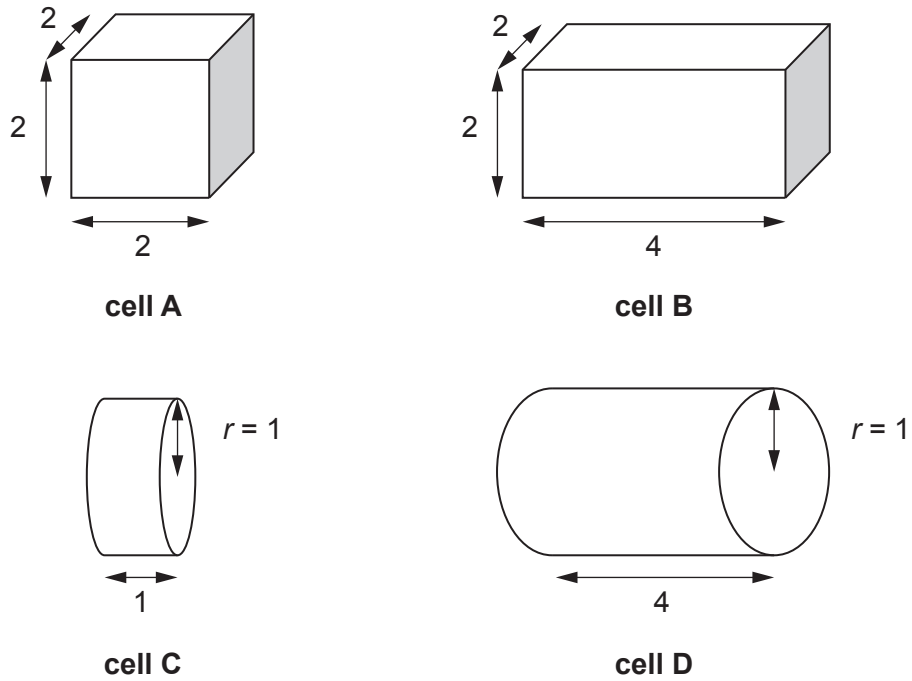

Your answer ☐

[1]

© OCR 2020

5 The diagram shows the pressure changes in the left side of the heart during one cardiac cycle. The state of the valves in the heart are shown at points **W** and **X**.

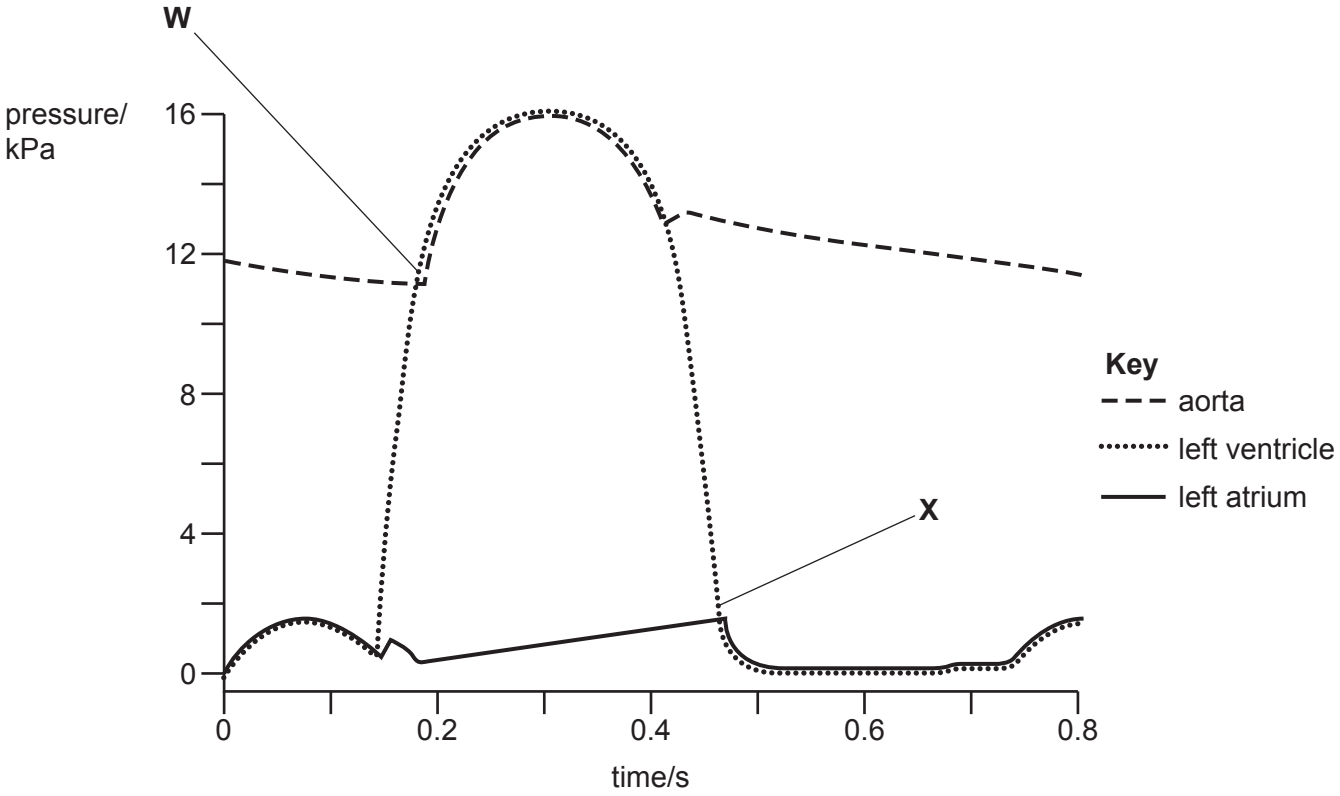

Which of the rows, **A** to **D**, is correct for points **W** and **X**?

Key: SL = semi-lunar
AV = atrio-ventricular

	W	**X**
A	closed SL valve	open AV valve
B	open SL valve	closed AV valve
C	closed SL valve	closed AV valve
D	open SL valve	open AV valve

Your answer ☐

[1]

© OCR 2020

6 The following stages are part of the expired air resuscitation (EAR) procedure:

1. Place your lips around the victim's mouth and create a seal
2. Pinch the nostrils closed
3. Tilt the head back and lift the chin
4. Watch to see if the chest rises
5. Blow gently into the mouth.

Which of the options, **A** to **D**, is the correct order for the EAR procedure?

A 3, 2, 1, 5, 4

B 2, 3, 4, 1, 5

C 1, 2, 3, 5, 4

D 4, 3, 1, 2, 5

Your answer ☐

[1]

7 Which of the molecules, **A** to **D**, is **not** involved in transcription?

A mRNA

B DNA

C tRNA

D RNA polymerase

Your answer ☐

[1]

© OCR 2020

8 In which of the stages of meiosis, **A** to **D**, are homologous chromosomes pulled to opposite poles of the cell?

A metaphase I

B anaphase I

C metaphase II

D anaphase II

Your answer ☐

[1]

9 The diagram shows one mechanism of transporting molecules through a plant.

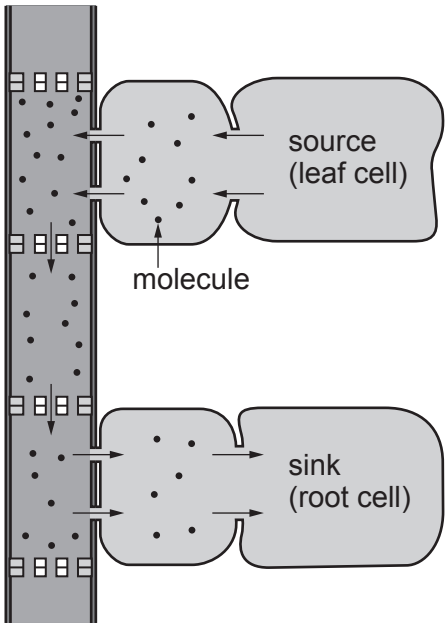

Which of the statements, **A** to **D**, describes what is occurring in the diagram?

A sucrose is being moved by translocation through xylem vessels

B water is being moved by translocation through phloem tubes

C water is being moved by transpiration pull through xylem vessels

D sucrose is being moved by translocation through phloem tubes

Your answer ☐

[1]

© OCR 2020

10 The following procedure was used to calculate the number of bacteria in a culture:

- $10\,cm^3$ of the bacterial culture was put into a test-tube
- serial dilution was used to make $10\,cm^3$ of a 1×10^{-3} dilution
- $0.1\,cm^3$ of this dilution was spread onto an agar plate and incubated.

The resulting number of bacterial colonies was 15.

Which of the options, **A** to **D**, is the correctly calculated number of bacteria in the original $10\,cm^3$ bacterial culture?

A 1.5×10^6

B 1.5×10^5

C 1.5×10^4

D 1.5×10^3

Your answer ☐

[1]

© OCR 2020

11 The diagram shows the results of cell cycle analysis using flow cytometry.

Fluorescence intensity indicates the DNA content of the cells.

Item removed due to third party copyright restrictions. Link to material: https://www.nexcelom.com/nexcelom-products/cellometer-and-celigo-image-cytometers/cellometer-vision-cba-imagecytometer/

Which of the areas, **A** to **D**, represents cells at the end of G_2 phase of the cell cycle?

Your answer ☐

[1]

12 Which of the options, **A** to **D**, can directly cause the production of abnormally high quantities of the growth factors that activate DNA replication genes?

A oncogene

B proto-oncogene

C tumour suppressor gene

D mutagen

Your answer ☐

[1]

© OCR 2020

13 The following shows part of a sequence of events that can take place inside cells:

- the cell shrinks and the nucleus condenses
- enzymes breakdown the cytoskeleton
- the nucleus breaks down.

Which of the processes, **A** to **D**, is being described in this sequence of events?

A mitosis

B cytokinesis

C apoptosis

D meiosis

Your answer ☐

[1]

14 The table shows the features of some of the screening methods used to detect cancer.

	Uses x-rays	**Uses a radioactive tracer**	**Can produce a 3-D image**
A	✗	✗	✓
B	✓	✗	✗
C	✗	✓	✓
D	✓	✓	✗

Which of the rows, **A** to **D**, is correct for magnetic resonance imaging (MRI)?

Your answer ☐

[1]

© OCR 2020

15 The table shows some of the data for patients with different stages of bowel cancer. The total number of patients diagnosed with bowel cancer was 40 000.

Stage at diagnosis	Percentage of patients diagnosed (%)	Percentage of diagnosed patients receiving chemotherapy (%)
Stage unknown	16	24
Stage 1	16	12
Stage 2	22	32
Stage 3	25	46
Stage 4	21	38

Which of the options, **A** to **D**, is the correctly calculated number of people with Stage 1 cancer receiving chemotherapy?

A 6 400 patients

B 768 patients

C 1 586 patients

D 4 800 patients

Your answer ☐

[1]

16 ATP contains three phosphate groups, a nitrogenous base and a pentose sugar.

Which of the rows, **A** to **D**, is correct for ATP?

	Nitrogenous base	Pentose sugar
A	adenosine	ribose
B	adenine	ribose
C	adenine	deoxyribose
D	adenosine	deoxyribose

Your answer ☐

[1]

© OCR 2020

17 α-glucose is an example of a monosaccharide sugar.

Which of the options, **A** to **D**, is **not** a property of monosaccharides?

A general formula $C_nH_{2n}O_n$

B soluble in water

C can be hydrolysed into simpler molecules

D have OH groups that can form hydrogen bonds with other molecules

Your answer ☐

[1]

18 The diagram below shows an antibody molecule.

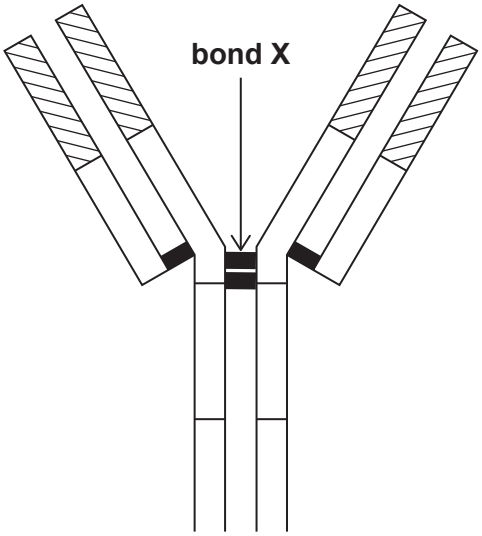

Which of the bonds, **A** to **D**, is the type of bond labelled **X** in the diagram?

A peptide

B hydrogen

C ionic

D disulfide

Your answer ☐

[1]

© OCR 2020

19 The diagram shows an enzyme with its substrate before and after the attachment of molecule **Q**.

Which of the options, **A** to **D**, is molecule **Q**?

A competitive inhibitor

B non-competitive inhibitor

C cofactor

D prosthetic group

Your answer ☐

[1]

20 Which of the structures, **A** to **D**, would **not** be found in Gram-positive bacteria?

A lipopolysaccharide envelope

B plasmid

C peptidoglycan cell wall

D flagellum

Your answer ☐

[1]

© OCR 2020

SECTION B

Answer **all** the questions.

21 A group of students set up the apparatus in Fig. 21.1 to estimate the rate of transpiration.

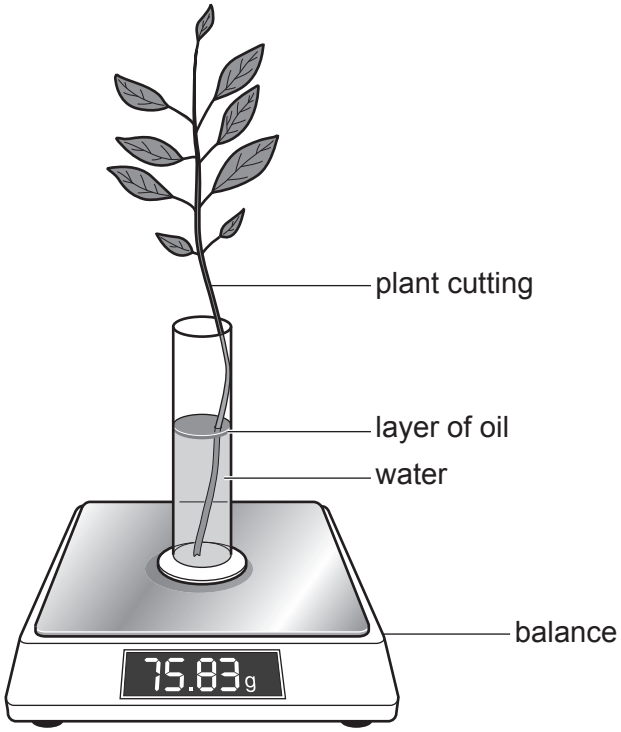

Fig. 21.1

(a) The apparatus in Fig. 21.1 is designed to estimate rate of transpiration in the plant cutting by recording changes in mass over several days.

Explain why this method may not give a true measurement of the rate of transpiration.

.....

.....

.....

.....

..... **[2]**

© OCR 2020

(b) The students decided to investigate the effect of wind speed on the rate of transpiration using the apparatus in Fig. 21.1.

(i) The students maintained constant environmental factors such as temperature and light intensity throughout the investigation.

Name **one** other factor regarding plant structure that needed to be controlled during this investigation and explain why it needs to be controlled.

.....

.....

.....

.....

..... **[2]**

(ii) Evaluate the method of estimating transpiration rate shown in Fig. 21.1 compared to using a standard potometer.

.....

.....

.....

.....

.....

.....

.....

.....

.....

..... **[4]**

© OCR 2020

(c) The students compared their data to a set of secondary data that had been obtained using the same method with the same controlled variables.

The data are shown in the table.

Wind speed (ms^{-1})	**Mean estimated rate of transpiration (a.u.)**	
	Student data	**Secondary data**
1.0	0.15	0.10
2.0	0.23	0.15
3.0	0.35	0.24
4.0	0.36	0.26
5.0	0.28	0.19

(i) Suggest **one** reason why the students' data showed much higher rates of transpiration than those shown by the secondary data.

.....

.....

..... **[1]**

(ii) Calculate the percentage change in the mean rate of transpiration estimated by the students as wind speed is increased from 2.0 to 4.0 ms^{-1}.

Give your answer to **3** significant figures.

percentage change = ... % **[2]**

© OCR 2020

(d) Fig. 21.2 shows two stomata, **X** and **Y**, on the under-side of a leaf.

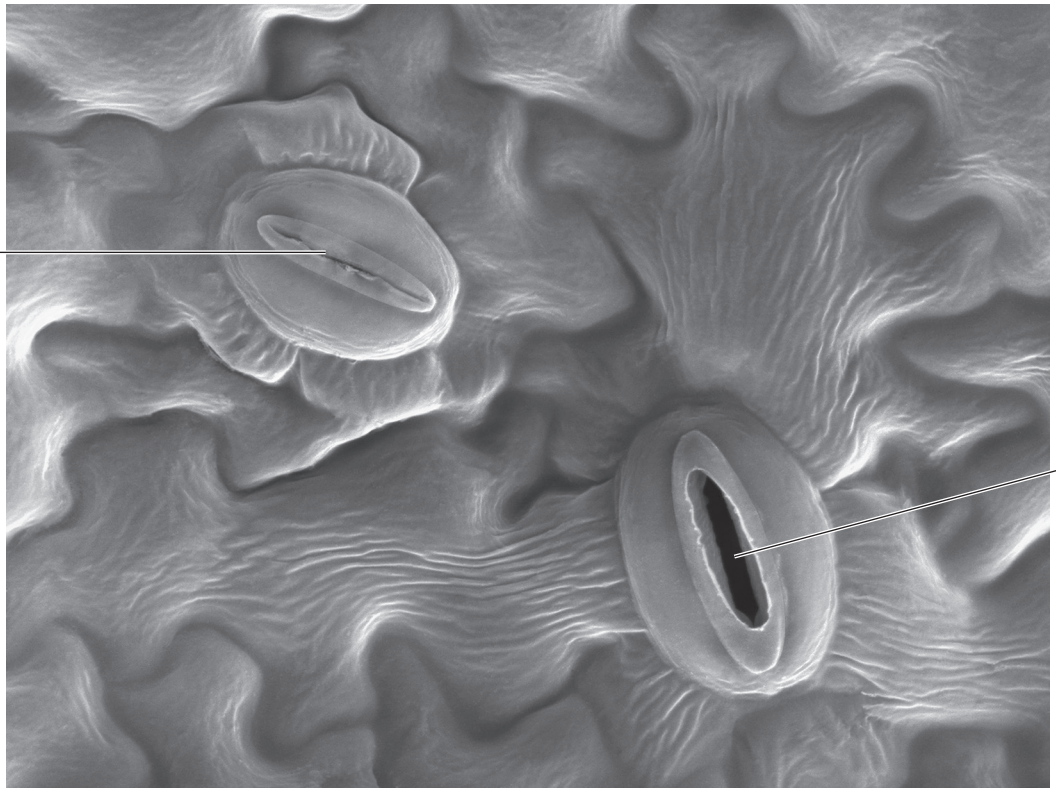

Magnification × 2000

Fig. 21.2

(i) Explain the difference in appearance of the stomata shown in Fig. 21.2.

.....

.....

.....

.....

.....

.....

.....

..... **[3]**

© OCR 2020

(ii) Calculate the actual length of stoma **X**.

Give your answer to **2** significant figures.

length = ... unit ..... **[3]**

Turn over for the next question

© OCR 2020

22 It has been hypothesised that there is a causal relationship between sensitivity to allergens and the development of asthma.

One study measured allergic responses in a group of young people from infancy to early adulthood to see if sensitivity to allergens increased the risk for developing asthma.

(a) **(i)** Explain what is meant by an allergic response.

.....

.....

.....

.....

..... **[2]**

(ii) Five allergens, including cow's milk and pollen, were used during the study to test for sensitivity.

Name **two** other allergens that could have been used to trigger an allergic response.

1 .....

2 .....
[1]

(b) Some of the data from asthmatics in the study are shown in the graph.

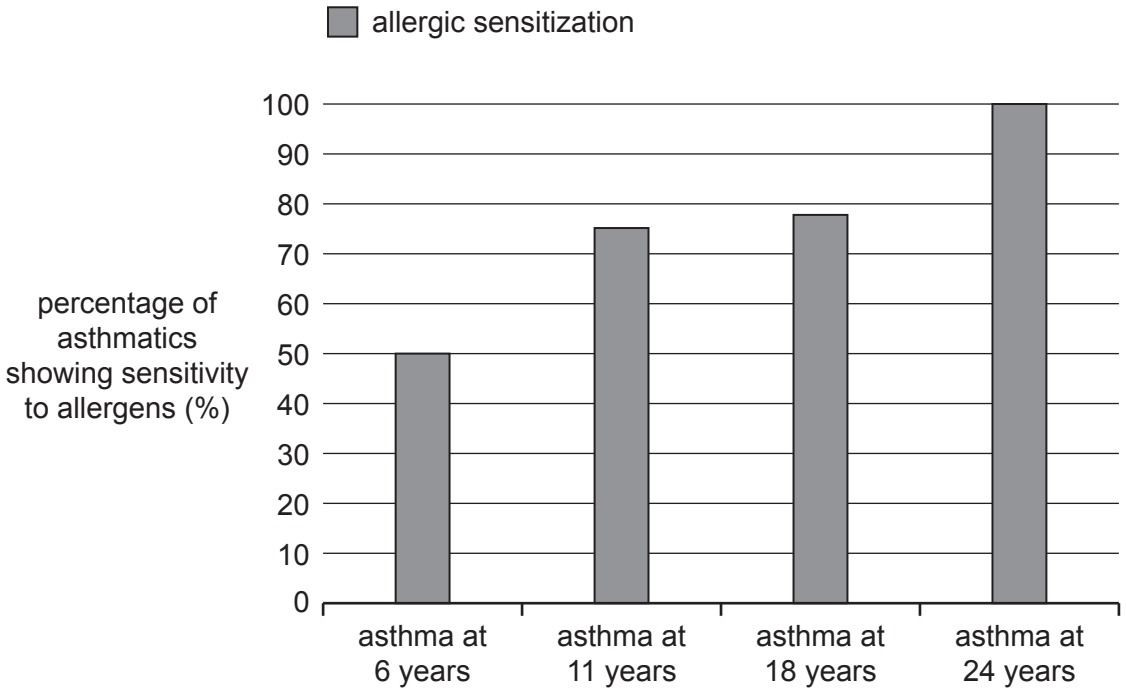

© OCR 2020

The following conclusion was made:

'The data in the graph show that there is a causal relationship between allergen sensitivity and probability of developing asthma'.

Evaluate this conclusion.

.....

.....

.....

.....

.....

.....

.....

.....

.....

..... **[4]**

(c) Explain why asthma is a condition that can be chronic but also sometimes acute.

.....

.....

.....

.....

.....

.....

.....

..... **[3]**

© OCR 2020

23 Hypoplastic Heart Syndrome (HHS) is a rare condition seen in newborn babies. HHS affects the internal structure of the heart.

The diagrams show a normal heart and the heart of a baby with HHS.

Normal Heart **Hypoplastic Heart Syndrome**

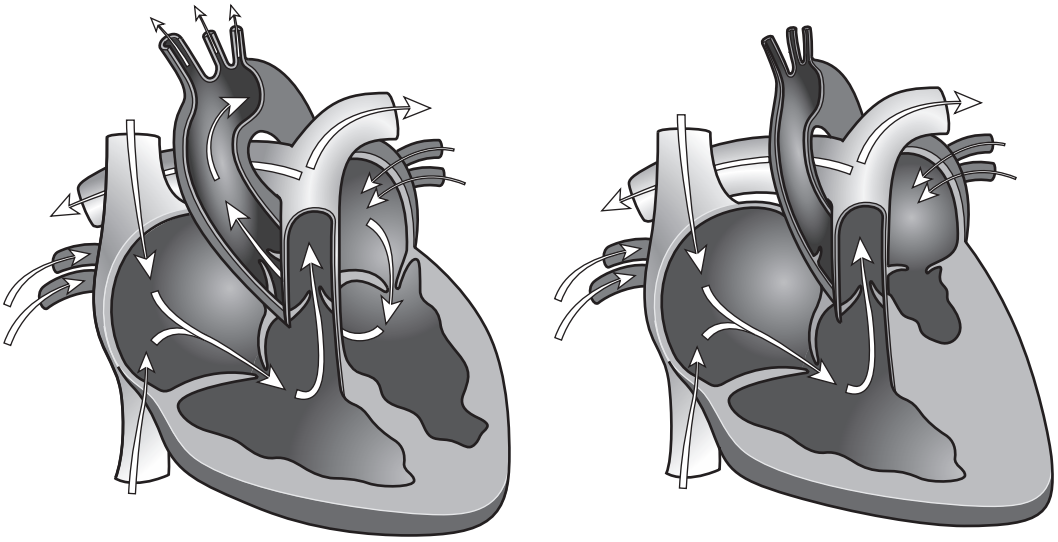

(a) Using your knowledge and the diagrams, describe how the structure of the heart has been affected by HHS.

.....

.....

.....

.....

..... **[2]**

(b) In babies with HHS, blood flow through the coronary artery is reduced.

(i) Suggest **one** effect on heart function that could be caused by reduced blood flow in the coronary artery. Give a reason for your suggestion.

suggestion .....

.....

reason .....

.....

[2]

© OCR 2020

(ii) The heart is the 'pumping' mechanism of the mass flow transport system in mammals.

Describe the advantages of a mass flow transport system.

.....

.....

.....

.....

..... **[2]**

Turn over for the next question

© OCR 2020

24 Karyotyping is a technique used to produce images of chromosomes extracted from fetal cells. An example is shown below.

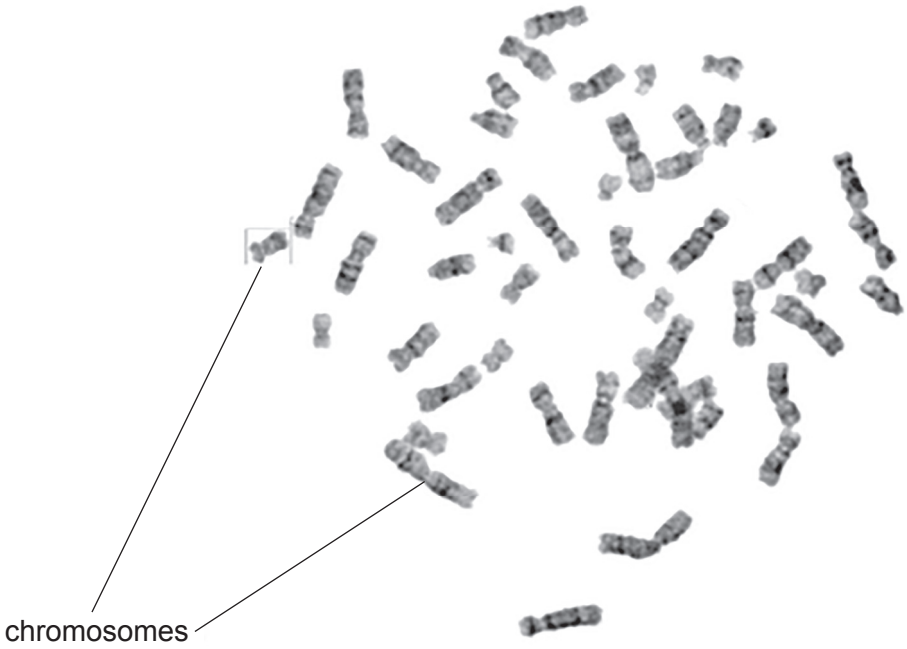

(a) Karyotyping involves many stages.

Complete the table giving reasons for each of the stages used in producing the karyotype image.

Stage	Reason
ultrasound scan	....
addition of colchicine	....
addition of a fluorescent stain	....

[3]

© OCR 2020

(b) Describe the final stages of this technique which are needed to produce a karyogram from the image.

.....

.....

.....

.....

..... **[2]**

(c) A 25 year old woman is fifteen weeks pregnant. It is her second pregnancy and she has been advised to have amniocentesis to extract fetal cells for karyotyping.

(i) Suggest why karyotyping may have been advised in this case.

.....

.....

.....

.....

..... **[2]**

(ii) Explain why amniocentesis was the preferred method of extracting fetal cells.

.....

.....

.....

.....

..... **[2]**

© OCR 2020

25 Catalase is an enzyme found in some mammalian cells.

(a) Using your knowledge, complete the passage about the enzyme catalase using the most appropriate term(s).

Catalase is spherical, meaning it is a ..... protein. It has

..... structure consisting of four polypeptide chains with a haem

..... group attached to each chain. The haem groups contain

..... which are important to its enzymatic function. The folding of the

polypeptide chains gives the enzyme its three-dimensional shape providing an active site

which is ..... to its substrate. **[5]**

(b) The polypeptide chains in catalase can be broken down to produce amino acids.

(i) Name the reaction involved **and** the bond that is broken during this process.

reaction.....

bond.....

[1]

(ii) Part of the amino acid valine is shown below.

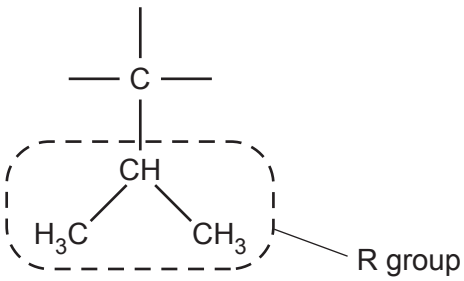

Complete the diagram by drawing the full structure of the amino acid, valine. **[2]**

END OF QUESTION PAPER

© OCR 2020

ADDITIONAL ANSWER SPACE

If additional space is required, you should use the following lined page(s). The question number(s) must be clearly shown in the margin(s).

© OCR 2020

OCR
Oxford Cambridge and RSA

Copyright Information

OCR is committed to seeking permission to reproduce all third-party content that it uses in its assessment materials. OCR has attempted to identify and contact all copyright holders whose work is used in this paper. To avoid the issue of disclosure of answer-related information to candidates, all copyright acknowledgements are reproduced in the OCR Copyright Acknowledgements Booklet. This is produced for each series of examinations and is freely available to download from our public website (www.ocr.org.uk) after the live examination series.

If OCR has unwittingly failed to correctly acknowledge or clear any third-party content in this assessment material, OCR will be happy to correct its mistake at the earliest possible opportunity.

For queries or further information please contact The OCR Copyright Team, The Triangle Building, Shaftesbury Road, Cambridge CB2 8EA.

OCR is part of the Cambridge Assessment Group; Cambridge Assessment is the brand name of University of Cambridge Local Examinations Syndicate (UCLES), which is itself a department of the University of Cambridge.

© OCR 2020