Oxford Cambridge and RSA

# Monday 12 October 2020 – Morning

## AS Level Biology B (Advancing Biology)

### H022/01 Foundations of biology

**Time allowed: 1 hour 30 minutes**

**You can use:**
- a scientific or graphical calculator
- a ruler (cm/mm)

Please write clearly in black ink. **Do not write in the barcodes.**

Centre number | | | | | | Candidate number | | | | |

First name(s) _____

Last name StemUp Model Solution

**INSTRUCTIONS**
- Use black ink. You can use an HB pencil, but only for graphs and diagrams.
- Write your answer to each question in the space provided. If you need extra space use the lined pages at the end of this booklet. The question numbers must be clearly shown.
- Answer **all** the questions.
- Where appropriate, your answer should be supported with working. Marks might be given for using a correct method, even if your answer is wrong.

**INFORMATION**
- The total mark for this paper is **70**.
- The marks for each question are shown in brackets **[ ]**.
- This document has **28** pages.

**ADVICE**
- Read each question carefully before you start your answer.

© OCR 2020 [601/4721/0]
DC (CJ/CGW) 206463/6 **R**

OCR is an exempt Charity



stemup.co.uk

BLANK PAGE

PLEASE DO NOT WRITE ON THIS PAGE

© OCR 2020

## SECTION A

**You should spend a maximum of 25 minutes on this section.**

**Write your answer for each question in the box provided.**

Answer **all** the questions.

**1** Which of the following cell structures, **A** to **D**, are present in prokaryotic cells?

**A** lysosomes

**B** vacuoles

**C** ribosomes

**D** starch grains

Your answer C

**[1]**

**2** A student observed a stained blood smear using a light microscope and wrote the following description about one of the blood cells:

- large cell
- nucleus with three lobes stained dark blue
- cytoplasm stained pale blue
- cell surface membrane present.

Which of the blood cells, **A** to **D**, is being described?

**A** monocyte

**B** neutrophil

**C** lymphocyte

**D** erythrocyte

Your answer B

**[1]**

© OCR 2020



stemup.co.uk

**3** The diagram shows an eyepiece graticule and stage micrometer used to measure the length of a mitochondrion.

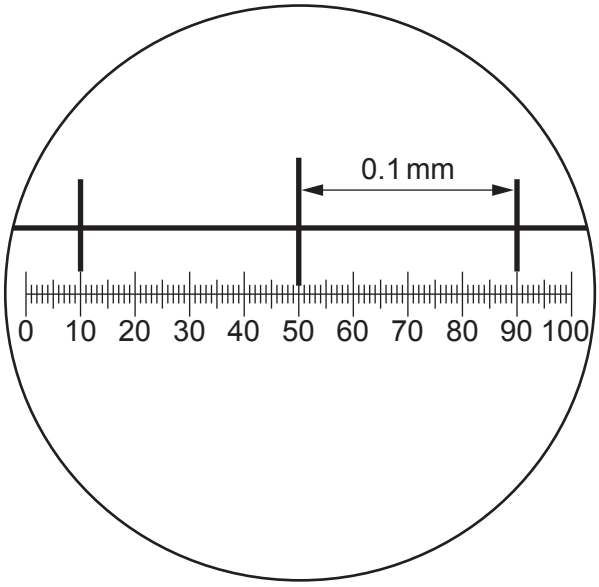


The mitochondrion was measured at 4 eyepiece graticule units.

Which of the options, **A** to **D**, is the **actual** length of the mitochondrion?

**A** 10 mm

**B** 10 μm

**C** 0.4 mm

**D** 40 μm

Your answer B

**[1]**

© OCR 2020

**4** A student was investigating the effect of cell size on the rate of diffusion using four different model cells.

He calculated the surface area of each cell as:

cell **A** = 24 $cm^2$
cell **B** = 40 $cm^2$
cell **C** = 13 $cm^2$
cell **D** = 31 $cm^2$

volume of cylinder = $\pi r^2 l$
volume of cuboid = $h b l$

Which of the model cells, **A** to **D**, has a surface area to volume ratio of **4 : 1**?

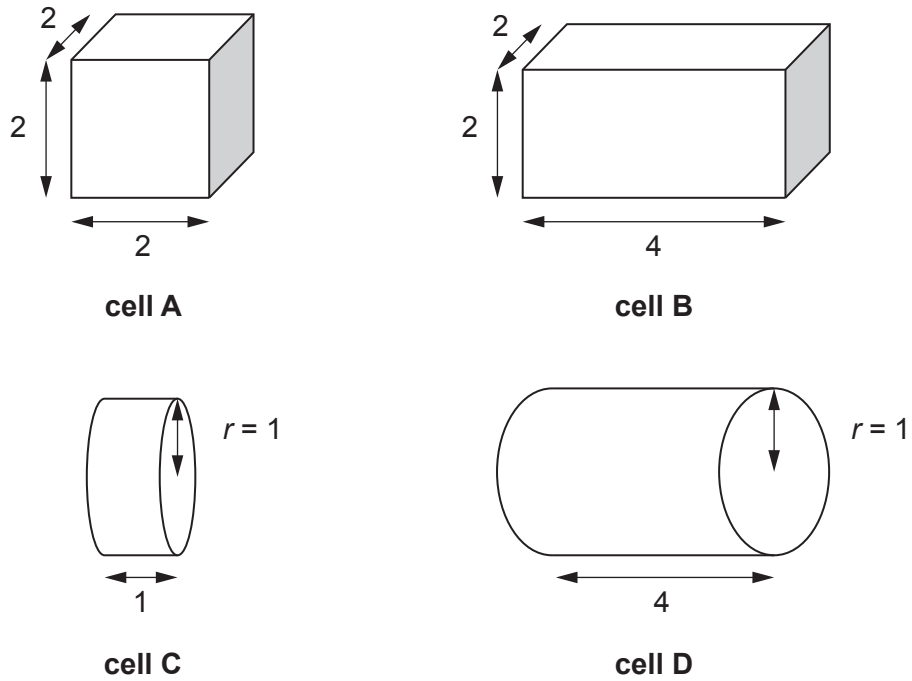


Your answer C

**[1]**

© OCR 2020



stemup.co.uk

**5** The diagram shows the pressure changes in the left side of the heart during one cardiac cycle. The state of the valves in the heart are shown at points **W** and **X**.

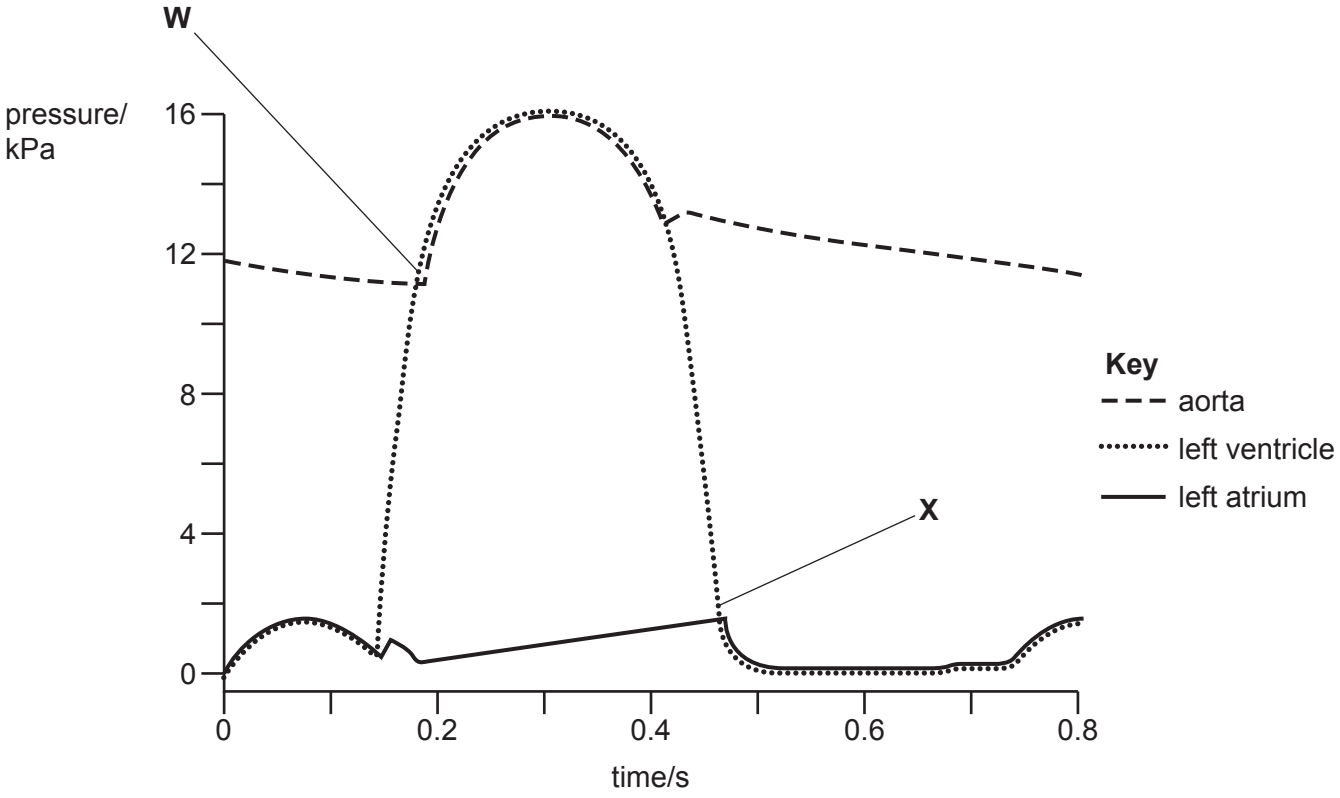


Which of the rows, **A** to **D**, is correct for points **W** and **X**?

Key: SL = semi-lunar
AV = atrio-ventricular

| | W | X |
|---|---|---|
| **A** | closed SL valve | open AV valve |
| **B** | open SL valve | closed AV valve |
| **C** | closed SL valve | closed AV valve |
| **D** | open SL valve | open AV valve |

Your answer B

**[1]**

© OCR 2020

**6** The following stages are part of the expired air resuscitation (EAR) procedure:

1. Place your lips around the victim's mouth and create a seal
2. Pinch the nostrils closed
3. Tilt the head back and lift the chin
4. Watch to see if the chest rises
5. Blow gently into the mouth.

Which of the options, **A** to **D**, is the correct order for the EAR procedure?

**A** 3, 2, 1, 5, 4

**B** 2, 3, 4, 1, 5

**C** 1, 2, 3, 5, 4

**D** 4, 3, 1, 2, 5

Your answer A

**[1]**

**7** Which of the molecules, **A** to **D**, is **not** involved in transcription?

**A** mRNA

**B** DNA

**C** tRNA

**D** RNA polymerase

Your answer C

**[1]**

© OCR 2020



stemup.co.uk

**8** In which of the stages of meiosis, **A** to **D**, are homologous chromosomes pulled to opposite poles of the cell?

**A** metaphase I

**B** anaphase I

**C** metaphase II

**D** anaphase II

Your answer B

**[1]**

**9** The diagram shows one mechanism of transporting molecules through a plant.

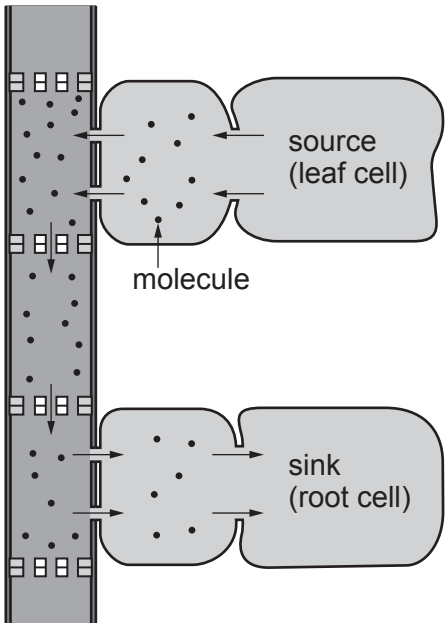


Which of the statements, **A** to **D**, describes what is occurring in the diagram?

**A** sucrose is being moved by translocation through xylem vessels

**B** water is being moved by translocation through phloem tubes

**C** water is being moved by transpiration pull through xylem vessels

**D** sucrose is being moved by translocation through phloem tubes

Your answer D

**[1]**

© OCR 2020

**10** The following procedure was used to calculate the number of bacteria in a culture:

- $10\,cm^3$ of the bacterial culture was put into a test-tube
- serial dilution was used to make $10\,cm^3$ of a $1 \times 10^{-3}$ dilution
- $0.1\,cm^3$ of this dilution was spread onto an agar plate and incubated.

The resulting number of bacterial colonies was 15.

Which of the options, **A** to **D**, is the correctly calculated number of bacteria in the original $10\,cm^3$ bacterial culture?

**A** $1.5 \times 10^6$

**B** $1.5 \times 10^5$

**C** $1.5 \times 10^4$

**D** $1.5 \times 10^3$

Your answer A

**[1]**

© OCR 2020



stemup.co.uk

**11** The diagram shows the results of cell cycle analysis using flow cytometry.

Fluorescence intensity indicates the DNA content of the cells.

Item removed due to third party copyright restrictions. Link to material: https://www.nexcelom.com/nexcelom-products/cellometer-and-celigo-image-cytometers/cellometer-vision-cba-imagecytometer/

Which of the areas, **A** to **D**, represents cells at the end of $G_2$ phase of the cell cycle?

Your answer D

**[1]**

**12** Which of the options, **A** to **D**, can directly cause the production of abnormally high quantities of the growth factors that activate DNA replication genes?

**A** oncogene

**B** proto-oncogene

**C** tumour suppressor gene

**D** mutagen

Your answer A

**[1]**

© OCR 2020

**13** The following shows part of a sequence of events that can take place inside cells:

- the cell shrinks and the nucleus condenses
- enzymes breakdown the cytoskeleton
- the nucleus breaks down.

Which of the processes, **A** to **D**, is being described in this sequence of events?

**A** mitosis

**B** cytokinesis

**C** apoptosis

**D** meiosis

Your answer C

**[1]**

**14** The table shows the features of some of the screening methods used to detect cancer.

| | **Uses x-rays** | **Uses a radioactive tracer** | **Can produce a 3-D image** |
|---|---|---|---|
| **A** | ✗ | ✗ | ✓ |
| **B** | ✓ | ✗ | ✗ |
| **C** | ✗ | ✓ | ✓ |
| **D** | ✓ | ✓ | ✗ |

Which of the rows, **A** to **D**, is correct for magnetic resonance imaging (MRI)?

Your answer A

**[1]**

© OCR 2020



stemup.co.uk

**15** The table shows some of the data for patients with different stages of bowel cancer. The total number of patients diagnosed with bowel cancer was 40 000.

| Stage at diagnosis | Percentage of patients diagnosed (%) | Percentage of diagnosed patients receiving chemotherapy (%) |
|---|---|---|
| Stage unknown | 16 | 24 |
| Stage 1 | 16 | 12 |
| Stage 2 | 22 | 32 |
| Stage 3 | 25 | 46 |
| Stage 4 | 21 | 38 |

Which of the options, **A** to **D**, is the correctly calculated number of people with Stage 1 cancer receiving chemotherapy?

**A** 6 400 patients

**B** 768 patients

**C** 1 586 patients

**D** 4 800 patients

Your answer B

**[1]**

**16** ATP contains three phosphate groups, a nitrogenous base and a pentose sugar.

Which of the rows, **A** to **D**, is correct for ATP?

| | Nitrogenous base | Pentose sugar |
|---|---|---|
| **A** | adenosine | ribose |
| **B** | adenine | ribose |
| **C** | adenine | deoxyribose |
| **D** | adenosine | deoxyribose |

Your answer B

**[1]**

© OCR 2020

**17** α-glucose is an example of a monosaccharide sugar.

Which of the options, **A** to **D**, is **not** a property of monosaccharides?

**A** general formula $C_nH_{2n}O_n$

**B** soluble in water

**C** can be hydrolysed into simpler molecules

**D** have OH groups that can form hydrogen bonds with other molecules

Your answer C

**[1]**

**18** The diagram below shows an antibody molecule.

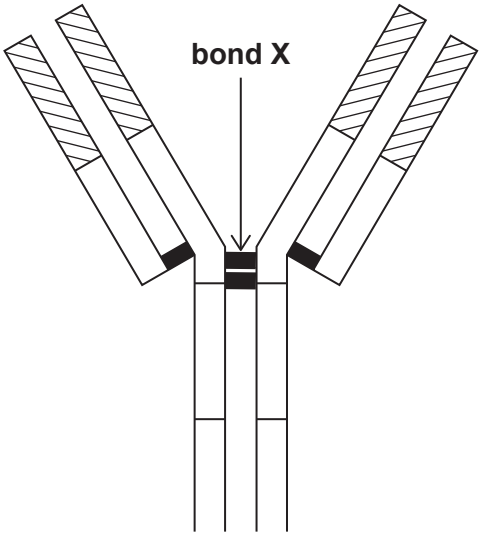


Which of the bonds, **A** to **D**, is the type of bond labelled **X** in the diagram?

**A** peptide

**B** hydrogen

**C** ionic

**D** disulfide

Your answer D

**[1]**

© OCR 2020



stemup.co.uk

**19** The diagram shows an enzyme with its substrate before and after the attachment of molecule **Q**.

Which of the options, **A** to **D**, is molecule **Q**?

**A** competitive inhibitor

**B** non-competitive inhibitor

**C** cofactor

**D** prosthetic group

Your answer B

**[1]**

**20** Which of the structures, **A** to **D**, would **not** be found in Gram-positive bacteria?

**A** lipopolysaccharide envelope

**B** plasmid

**C** peptidoglycan cell wall

**D** flagellum

Your answer A

**[1]**

© OCR 2020

## SECTION B

Answer **all** the questions.

**21** A group of students set up the apparatus in Fig. 21.1 to estimate the rate of transpiration.

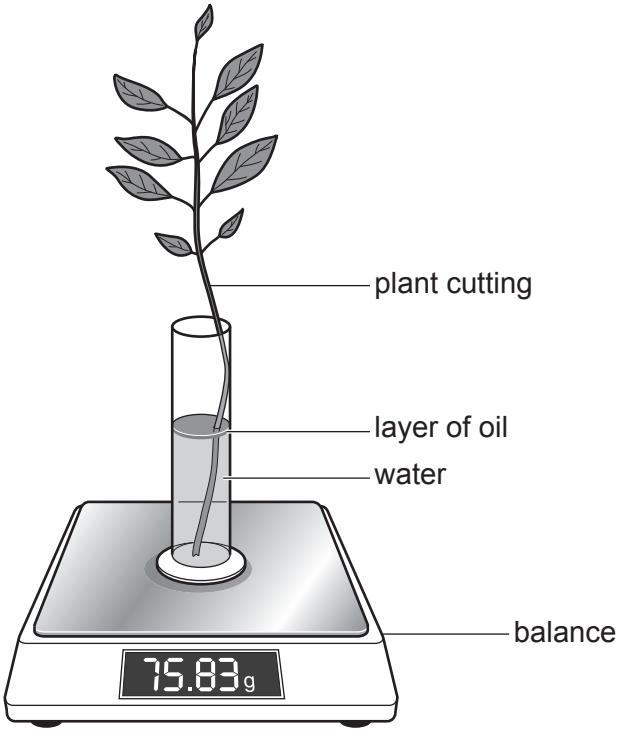


**Fig. 21.1**

**(a)** The apparatus in Fig. 21.1 is designed to estimate rate of transpiration in the plant cutting by recording changes in mass over several days.

Explain why this method may not give a true measurement of the rate of transpiration.

The mass lost may not be just water lost by transpiration, e.g. the plant may lose mass if leaves drop off or its dry mass changes. Some of the water taken up is used by the plant, e.g. in photosynthesis, so it is never transpired.

..... **[2]**

© OCR 2020



stemup.co.uk

**(b)** The students decided to investigate the effect of wind speed on the rate of transpiration using the apparatus in Fig. 21.1.

**(i)** The students maintained constant environmental factors such as temperature and light intensity throughout the investigation.

Name **one** other factor regarding plant structure that needed to be controlled during this investigation and explain why it needs to be controlled.

The number (total surface area) of leaves on the cutting.

A larger leaf surface area has more stomata, so it would increase the rate of transpiration, so it must be kept the same so only wind speed affects the rate.

..... **[2]**

**(ii)** Evaluate the method of estimating transpiration rate shown in Fig. 21.1 compared to using a standard potometer.

A potometer measures water uptake by timing how long it takes an air bubble to travel a fixed distance along the capillary tube (rate of movement of the bubble).

Advantage of the potometer: transpiration measurements are taken over a much shorter time scale (minutes rather than several days).

Disadvantages of the potometer: it is more difficult to set up (hard to cut the shoot under water and ensure there are no air bubbles or leaks), and it needs to be checked regularly, so it cannot be left for a long time, whereas the balance method is easy to set up and can be left for days.

..... **[4]**

© OCR 2020

**(c)** The students compared their data to a set of secondary data that had been obtained using the same method with the same controlled variables.

The data are shown in the table.

| Wind speed ($ms^{-1}$) | Mean estimated rate of transpiration (a.u.) | |
|---|---|---|
| | **Student data** | **Secondary data** |
| 1.0 | 0.15 | 0.10 |
| 2.0 | 0.23 | 0.15 |
| 3.0 | 0.35 | 0.24 |
| 4.0 | 0.36 | 0.26 |
| 5.0 | 0.28 | 0.19 |

**(i)** Suggest **one** reason why the students' data showed much higher rates of transpiration than those shown by the secondary data.

The students' plants could have lost extra mass due to leaf loss (leaves dropping off), which was wrongly recorded as water lost by transpiration.

..... **[1]**

**(ii)** Calculate the percentage change in the mean rate of transpiration estimated by the students as wind speed is increased from 2.0 to 4.0 $ms^{-1}$.

Give your answer to **3** significant figures.

change = 0.36 − 0.23 = 0.13

% change = (0.13 ÷ 0.23) × 100

= 56.52%

percentage change = .....56.5..... % **[2]**

© OCR 2020



stemup.co.uk

**(d)** Fig. 21.2 shows two stomata, **X** and **Y**, on the under-side of a leaf.

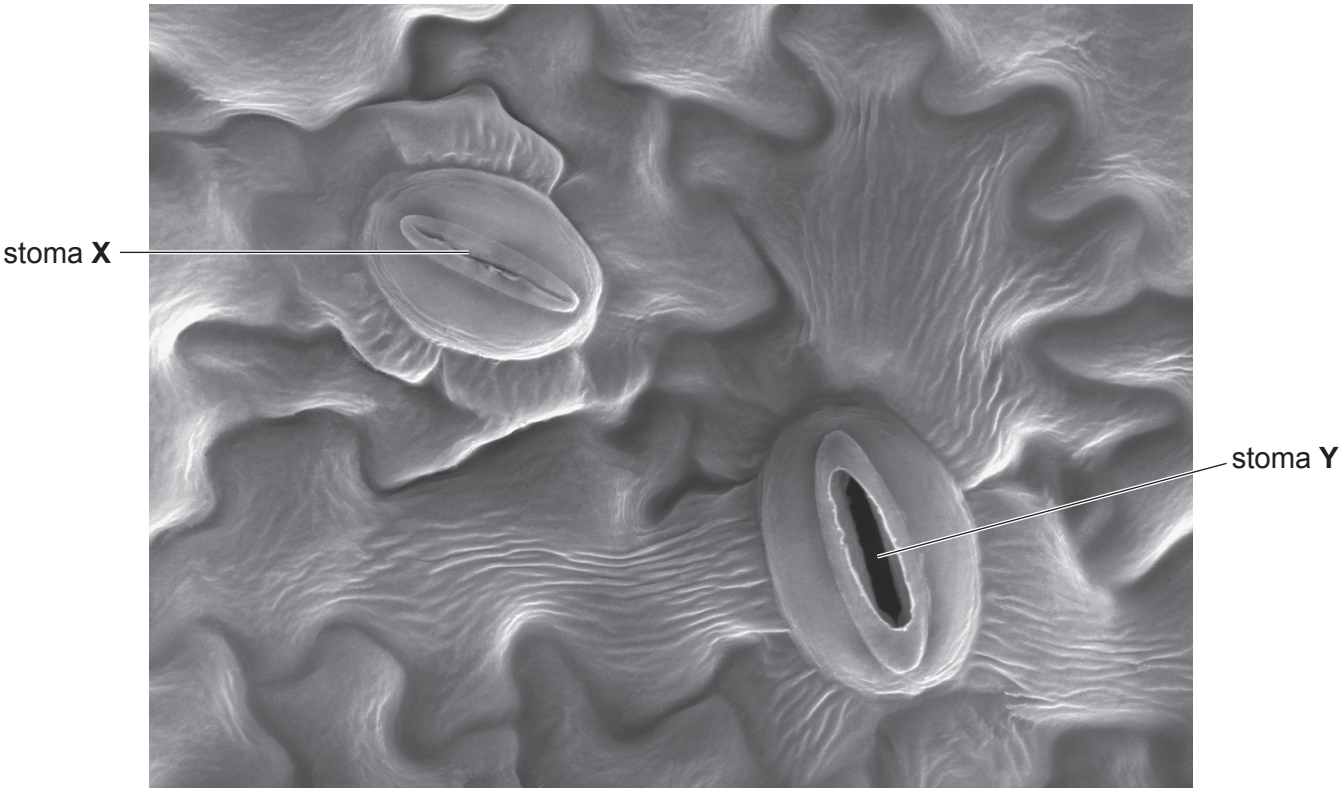


Magnification × 2000

**Fig. 21.2**

**(i)** Explain the difference in appearance of the stomata shown in Fig. 21.2.

Stoma Y is open and stoma X is closed.

In stoma Y the guard cells are turgid: ions ($K^+$) are actively moved into the guard cells, giving a lower water potential in the guard cell cytoplasm, so water moves into the guard cells by osmosis, down the water potential gradient.

The turgid guard cells swell and bend apart (thicker inner walls), opening the pore. The guard cells of stoma X have lost water by osmosis and are flaccid, so its pore is closed. **[3]**

© OCR 2020

**(ii)** Calculate the actual length of stoma **X**.

Give your answer to **2** significant figures.

measured length of stoma X = 26 mm

= 26 000 μm

actual length = 26 000 ÷ 2000 = 13 μm

length = .....13..... unit .....μm..... **[3]**

**Turn over for the next question**

© OCR 2020



stemup.co.uk

**22** It has been hypothesised that there is a causal relationship between sensitivity to allergens and the development of asthma.

One study measured allergic responses in a group of young people from infancy to early adulthood to see if sensitivity to allergens increased the risk for developing asthma.

**(a)** **(i)** Explain what is meant by an allergic response.

The immune system responds to a harmless substance (a harmless antigen called an allergen) as if it were a pathogen. Antibodies are produced to the allergen, and on later exposure an inflammatory response is triggered (histamine released), causing itching and inflammation. **[2]**

**(ii)** Five allergens, including cow's milk and pollen, were used during the study to test for sensitivity.

Name **two** other allergens that could have been used to trigger an allergic response.

1 house dust mites

2 animal hair (pet fur)

**[1]**

**(b)** Some of the data from asthmatics in the study are shown in the graph.

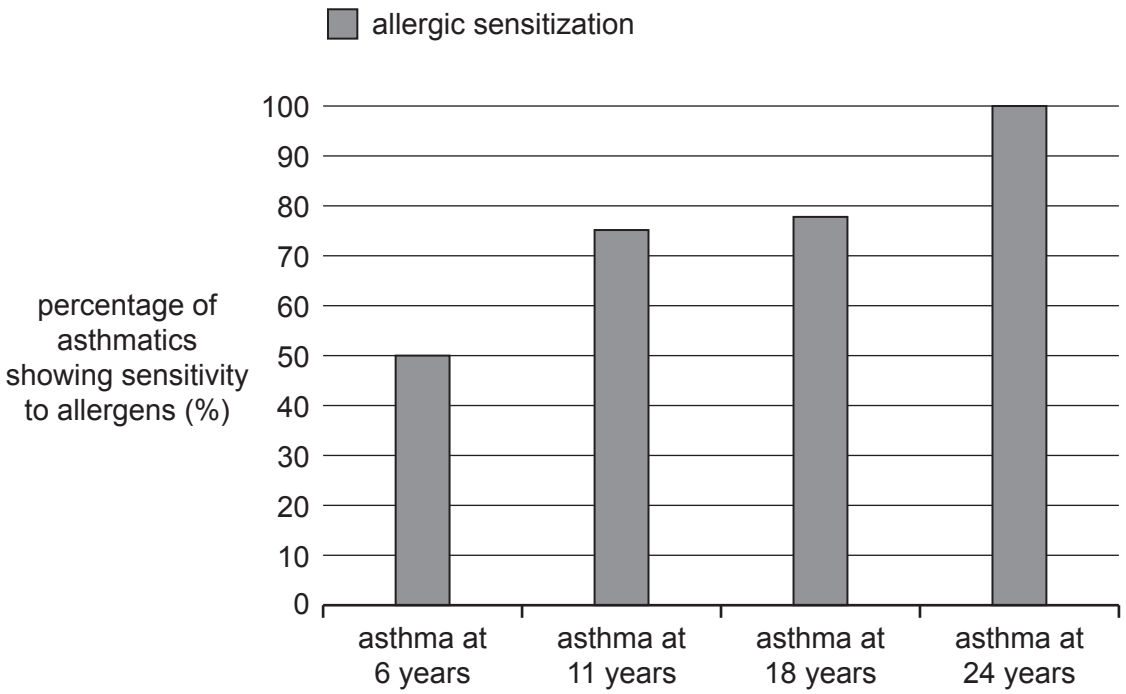


© OCR 2020

The following conclusion was made:

'The data in the graph show that there is a causal relationship between allergen sensitivity and probability of developing asthma'.

Evaluate this conclusion.

Supporting: 100% of asthmatics showed sensitivity to allergens by age 24, and as age increases there is increasing allergen sensitivity amongst asthmatics (50% at 6 years, about 75% at 11 and 78% at 18). So there is a positive correlation between asthma and allergen sensitivity.

Against: a correlation does not mean a causal relationship. Other factors, e.g. gender, smoking, air pollution or family history, were not considered, and there are no data for people without asthma, so the conclusion is not fully supported.

**[4]**

**(c)** Explain why asthma is a condition that can be chronic but also sometimes acute.

Asthma can be chronic because it is a long-term condition with a slow onset that lasts for years; the inflammation of the airways (bronchi and bronchioles) is chronic.

It can also be acute because an asthma attack has a sudden onset and is short lasting: bronchial spasm (contraction of smooth muscle) quickly narrows the airways, then subsides.

**[3]**

© OCR 2020



stemup.co.uk

**23** Hypoplastic Heart Syndrome (HHS) is a rare condition seen in newborn babies. HHS affects the internal structure of the heart.

The diagrams show a normal heart and the heart of a baby with HHS.

**Normal Heart** **Hypoplastic Heart Syndrome**

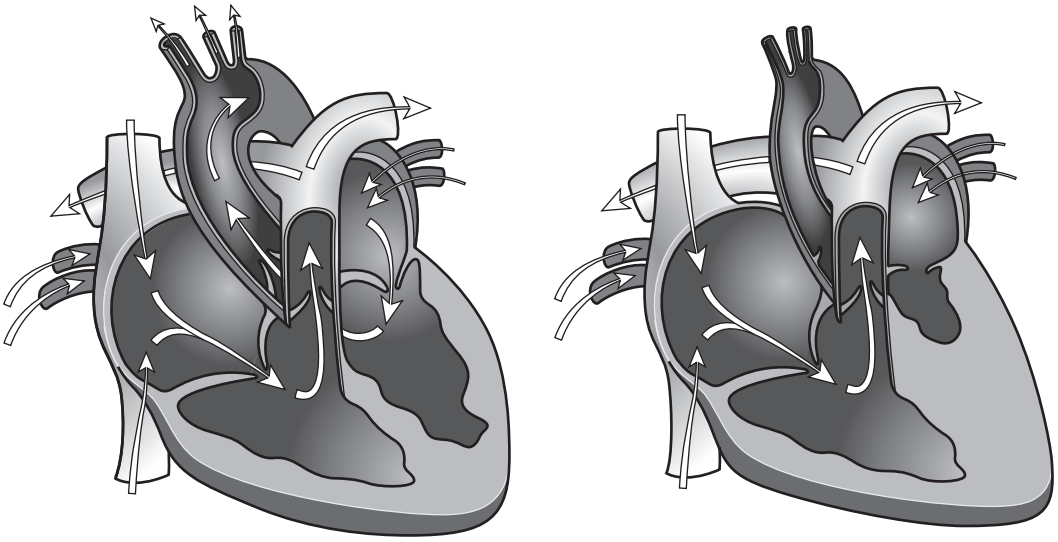

**(a)** Using your knowledge and the diagrams, describe how the structure of the heart has been affected by HHS.

In HHS the left ventricle is much smaller (a reduced volume) with an underdeveloped wall. The aorta is small and narrow, and the valves on the left side (bicuspid and aortic semi-lunar valves) are smaller.

**[2]**

**(b)** In babies with HHS, blood flow through the coronary artery is reduced.

**(i)** Suggest **one** effect on heart function that could be caused by reduced blood flow in the coronary artery. Give a reason for your suggestion.

suggestion reduced cardiac output (the heart pumps less blood per minute)

reason lack of oxygen and nutrients (glucose) reaching the heart (cardiac) muscle, so less ATP from aerobic respiration for contraction.

**[2]**

© OCR 2020

**(ii)** The heart is the 'pumping' mechanism of the mass flow transport system in mammals.

Describe the advantages of a mass flow transport system.

Mass flow moves substances (e.g. oxygen, glucose) quickly over long distances, and shortens the diffusion distance to every cell, so it allows organisms to grow larger (with a small surface area to volume ratio). **[2]**

**Turn over for the next question**

© OCR 2020



stemup.co.uk

**24** Karyotyping is a technique used to produce images of chromosomes extracted from fetal cells. An example is shown below.

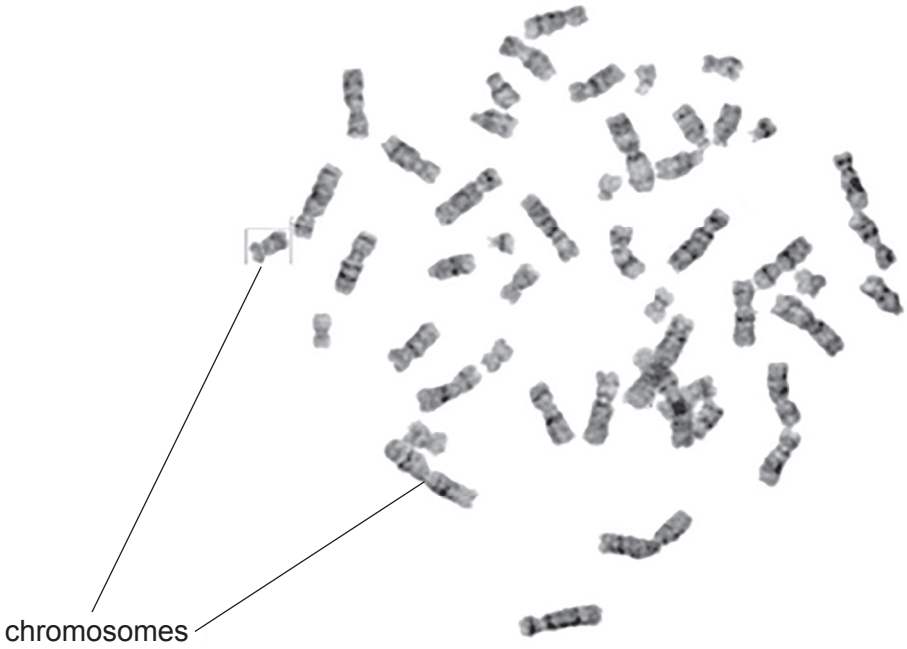


**(a)** Karyotyping involves many stages.

Complete the table giving reasons for each of the stages used in producing the karyotype image.

| Stage | Reason |
|---|---|
| ultrasound scan | locates the position of fetus and placenta, so the needle does not damage the fetus |
| addition of colchicine | stops mitosis (at metaphase, as no spindle forms), so chromosomes are condensed |
| addition of a fluorescent stain | allows the chromosomes (and their banding patterns) to be seen |

**[3]**

© OCR 2020

**(b)** Describe the final stages of this technique which are needed to produce a karyogram from the image.

A photograph (computerised image) of the chromosomes is taken and cut up. The chromosomes are arranged into homologous pairs and put in order of size (largest first), matching banding patterns and centromere positions.

..... **[2]**

**(c)** A 25 year old woman is fifteen weeks pregnant. It is her second pregnancy and she has been advised to have amniocentesis to extract fetal cells for karyotyping.

**(i)** Suggest why karyotyping may have been advised in this case.

Her first baby may have a syndrome caused by a chromosomal mutation (e.g. Down's syndrome), or there is a family history of such a syndrome. Or an abnormality was seen on the ultrasound scan, showing a need for further investigation.

..... **[2]**

**(ii)** Explain why amniocentesis was the preferred method of extracting fetal cells.

Amniocentesis can be done at 15 weeks (chorionic villus sampling, CVS, is done earlier, at 10 to 13 weeks). It has less chance of causing miscarriage than CVS, and less chance of causing fetal deformities than CVS.

..... **[2]**

© OCR 2020



stemup.co.uk

**25** Catalase is an enzyme found in some mammalian cells.

**(a)** Using your knowledge, complete the passage about the enzyme catalase using the most appropriate term(s).

Catalase is spherical, meaning it is a .....*globular*..... protein. It has

.....*quaternary*..... structure consisting of four polypeptide chains with a haem

.....*prosthetic*..... group attached to each chain. The haem groups contain

.....*iron ions*..... which are important to its enzymatic function. The folding of the

polypeptide chains gives the enzyme its three-dimensional shape providing an active site

which is ....*complementary*..... to its substrate. **[5]**

**(b)** The polypeptide chains in catalase can be broken down to produce amino acids.

**(i)** Name the reaction involved **and** the bond that is broken during this process.

reaction.....*hydrolysis*.....

bond.....*peptide*.....

**[1]**

**(ii)** Part of the amino acid valine is shown below.

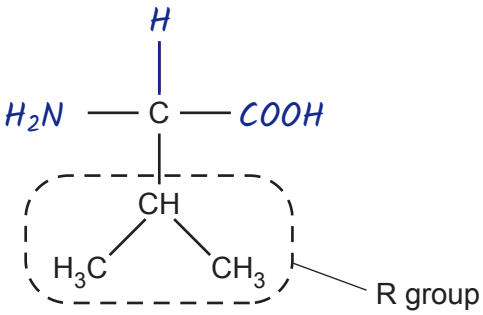


Complete the diagram by drawing the full structure of the amino acid, valine. **[2]**

**END OF QUESTION PAPER**

© OCR 2020

## ADDITIONAL ANSWER SPACE

If additional space is required, you should use the following lined page(s). The question number(s) must be clearly shown in the margin(s).

© OCR 2020

OCR
Oxford Cambridge and RSA

**Copyright Information**

OCR is committed to seeking permission to reproduce all third-party content that it uses in its assessment materials. OCR has attempted to identify and contact all copyright holders whose work is used in this paper. To avoid the issue of disclosure of answer-related information to candidates, all copyright acknowledgements are reproduced in the OCR Copyright Acknowledgements Booklet. This is produced for each series of examinations and is freely available to download from our public website (www.ocr.org.uk) after the live examination series.

If OCR has unwittingly failed to correctly acknowledge or clear any third-party content in this assessment material, OCR will be happy to correct its mistake at the earliest possible opportunity.

For queries or further information please contact The OCR Copyright Team, The Triangle Building, Shaftesbury Road, Cambridge CB2 8EA.

OCR is part of the Cambridge Assessment Group; Cambridge Assessment is the brand name of University of Cambridge Local Examinations Syndicate (UCLES), which is itself a department of the University of Cambridge.

© OCR 2020