Oxford Cambridge and RSA

Wednesday 20 October 2021 – Morning

A Level Physics B (Advancing Physics)

H557/03 Practical skills in physics

Time allowed: 1 hour 30 minutes

You must have:
- the Data, Formulae and Relationships Booklet

You can use:
- a scientific or graphical calculator
- a ruler (cm/mm)

Please write clearly in black ink. **Do not write in the barcodes.**

Centre number | | | | | | Candidate number | | | | |

First name(s) _____

Last name _____

INSTRUCTIONS
- Use black ink. You can use an HB pencil, but only for graphs and diagrams.
- Write your answer to each question in the space provided. If you need extra space use the lined pages at the end of this booklet. The question numbers must be clearly shown.
- Answer **all** the questions.
- Where appropriate, your answer should be supported with working. Marks might be given for using a correct method, even if your answer is wrong.

INFORMATION
- The total mark for this paper is **60**.
- The marks for each question are shown in brackets **[ ]**.
- Quality of extended response will be assessed in questions marked with an asterisk (*).
- This document has **20** pages.

ADVICE
- Read each question carefully before you start your answer.

© OCR 2021 [601/4745/3]
DC (CJ/CGW) 300558/5
OCR is an exempt Charity

SECTION A

Answer **all** the questions.

1 This question is about measuring the acceleration of free fall.

(a) Some students use a g-ball to record the time taken to fall from different heights. A g-ball is a ball with a timer inserted. The timer starts automatically when the ball is released from rest and stops when it hits the floor.

The results are recorded in **Table 1.1**.

Height / m ± 0.02	Time to fall, t / s				t^2 / s^2
	First attempt	Second attempt	Third attempt	Average time	
2.00	0.64	0.66	0.67	0.66	0.43
3.00	0.78	0.79	0.78	0.78	0.61
4.00	0.90	0.91	0.88	0.90	0.80
5.00	1.01	1.00	1.03		
6.00	1.11	1.08	1.13		
7.00	1.20	1.18	1.23	1.20	1.45
8.00	1.28	1.30	1.27	1.28	1.65

Table 1.1

(i) Complete the last two columns in **Table 1.1**. **[2]**

(ii) Plot these **two** points to complete the graph of height against t^2 in **Fig. 1.1**. Add horizontal error bars to **all** the plotted points. **[3]**

© OCR 2021

(iii) Draw the line of best fit on the graph and calculate the gradient.

gradient = ... **[2]**

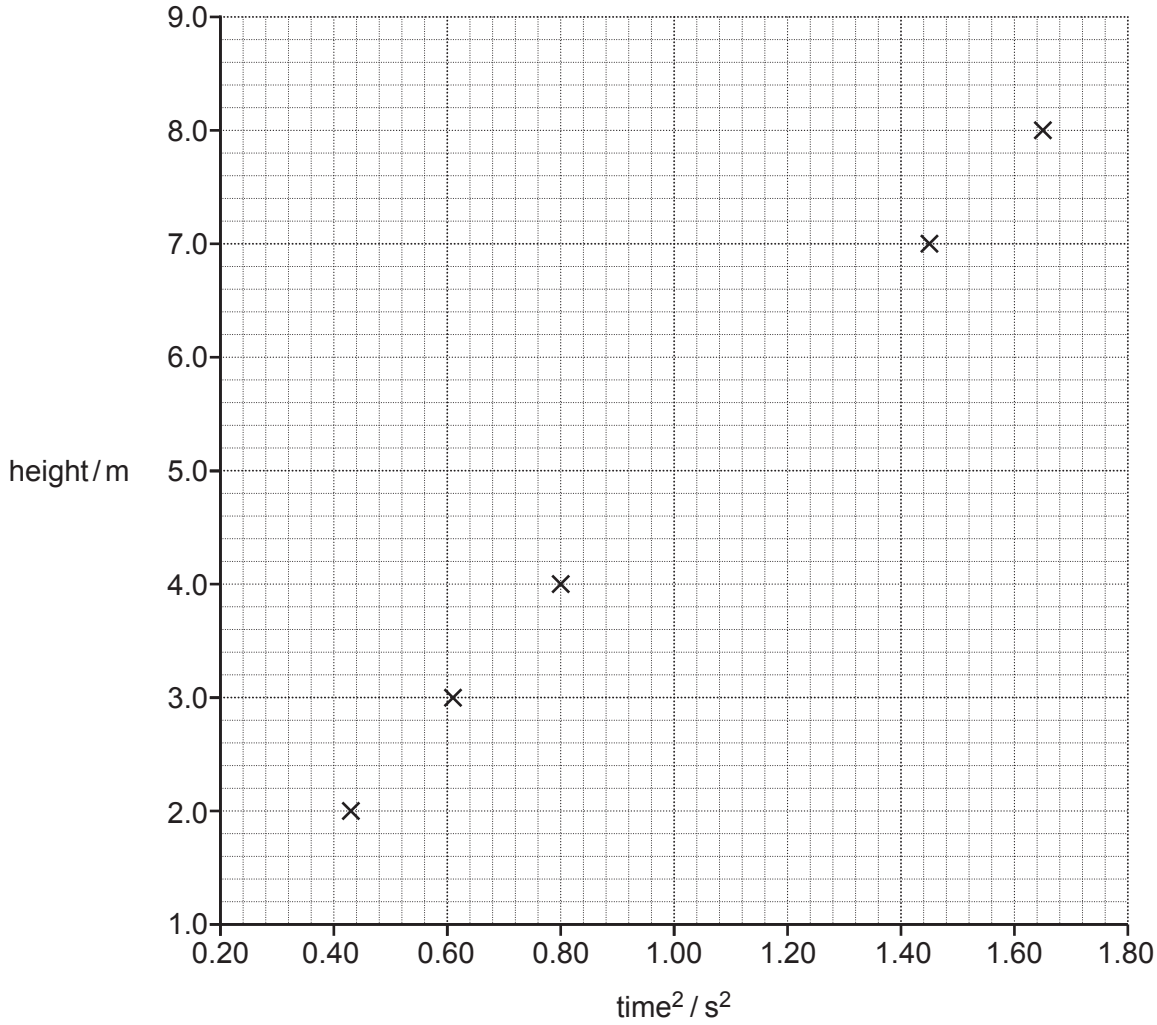

Fig. 1.1

(iv) Use the gradient to calculate the value for the acceleration of free fall. Include the uncertainty in your answer.

acceleration of free fall = ... ± ..... m s^{-2} **[4]**

© OCR 2021

(b) Another way to calculate the acceleration of free fall is to drop a weighted card through two light gates connected to a datalogger in a laboratory as shown in **Fig. 1.2**.

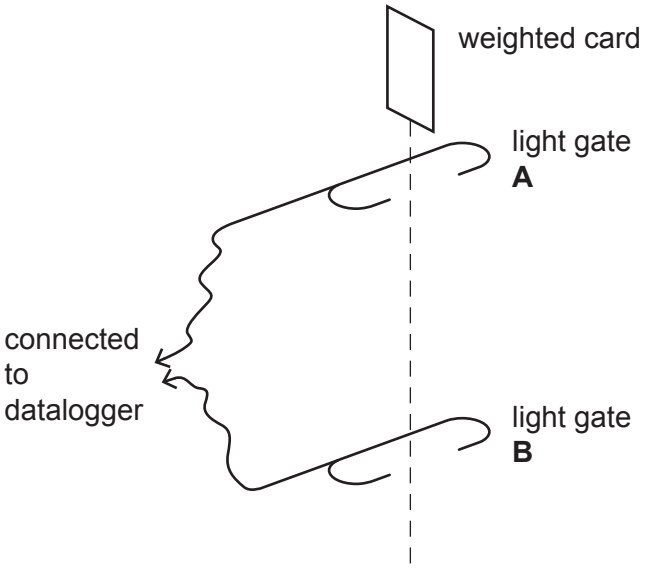

Fig. 1.2

(i) State the minimum initial data you would need to have in order to obtain a value of *g* by this method.

.....

..... **[1]**

© OCR 2021

(ii) Describe the sources of error in this method. Discuss whether you consider the g-ball or the light-gate method would give a more accurate value for *g*, the acceleration of free fall.

.....

.....

.....

.....

.....

.....

.....

.....

.....

.....

.....

.....

.....

.....

..... **[3]**

© OCR 2021

2 The wavelength of light can be measured using Young's double slit experiment.

A filament lamp is used to illuminate the double slits in the centre of a square section drainpipe as shown in **Fig. 2.1**. Interference fringes are observed on a ground glass screen at the other end of the drainpipe. The distance between the slits and the screen is measured using a tape measure as 1.50 m.

The double slits are manufactured to have a separation of 8.5×10^{-5} m with an uncertainty of ±10%.

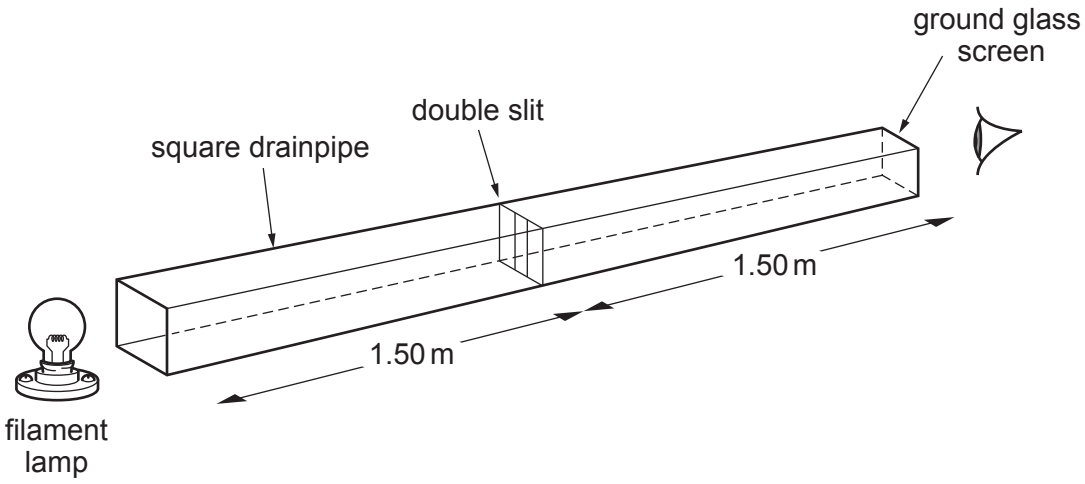

Fig. 2.1

(a) Describe how the fringe separation could be measured in a school laboratory.

.....

.....

.....

..... **[2]**

(b) The distance between neighbouring fringes is measured as 1.02 cm ± 2%.

(i) Calculate the wavelength of the light.

wavelength = ... m **[3]**

© OCR 2021

(ii) Estimate the uncertainty in the measurement of the distance between the slits and the screen and hence calculate the absolute uncertainty in the calculated value of wavelength.

absolute uncertainty = ... m **[3]**

(c) The experiment is repeated using a red laser light instead of a filament bulb.

Describe and explain the effect this will have on the experimental **uncertainties**.

.....

.....

.....

.....

.....

..... **[3]**

© OCR 2021

3 This question is about the oscillations of hacksaw blades.

(a) **Table 3.1** shows how the period varies with the length of a hacksaw blade.

Length / cm	Period / s
28.0	0.734
26.0	0.677
24.0	0.623
22.0	0.569
20.0	0.511

Table 3.1

(i) Apply a test to the data to show that length is proportional to period. Explain the method.

[2]

(ii) Calculate the natural frequency for a blade with a length of 24.0 cm.

frequency = ... Hz **[1]**

© OCR 2021

(b) The same hacksaw blade is then used in an experiment to investigate resonance. The hacksaw blade is connected by a string to a vibration generator which is attached to a signal generator as shown in **Fig. 3.1**.

(i) What is resonance?

.....

.....

.....

..... **[2]**

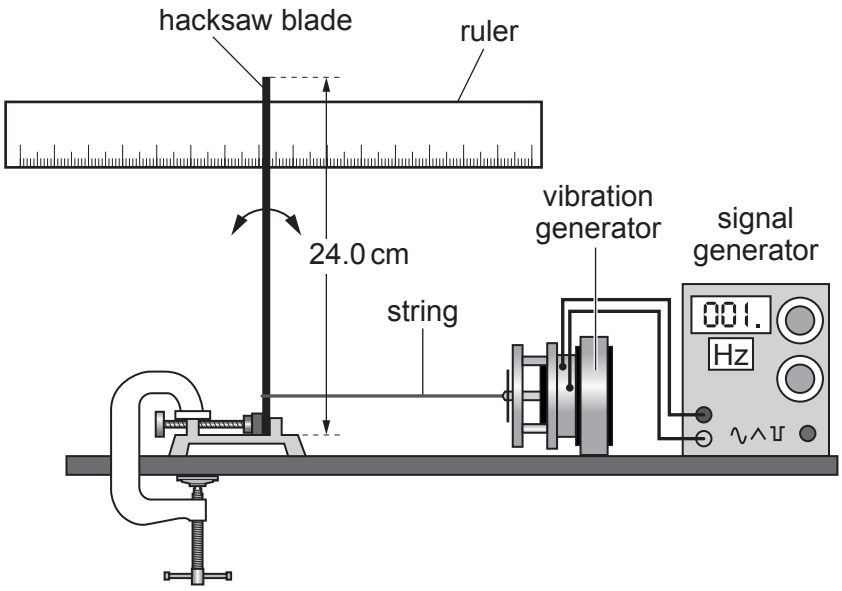

Fig. 3.1

(ii) On the axes in **Fig. 3.2** sketch the frequency-amplitude graph you would expect to achieve. Label the significant features of your graph.

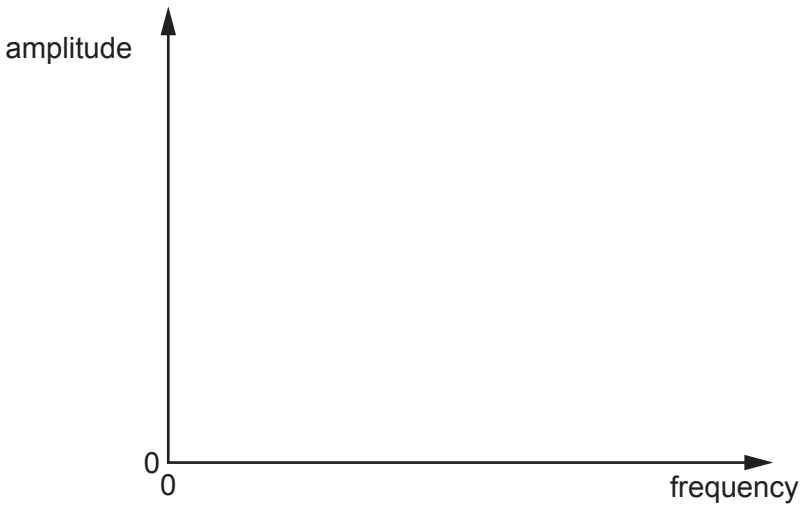

Fig. 3.2 **[3]**

© OCR 2021

(iii)* To investigate how damping affects resonance, two different sized pieces of card can be stuck on the vibrating end of the hacksaw blade as shown in **Fig. 3.3**.

Describe in detail the data you would collect to perform the investigation, and describe and explain what you would expect the results to show. **[6]**

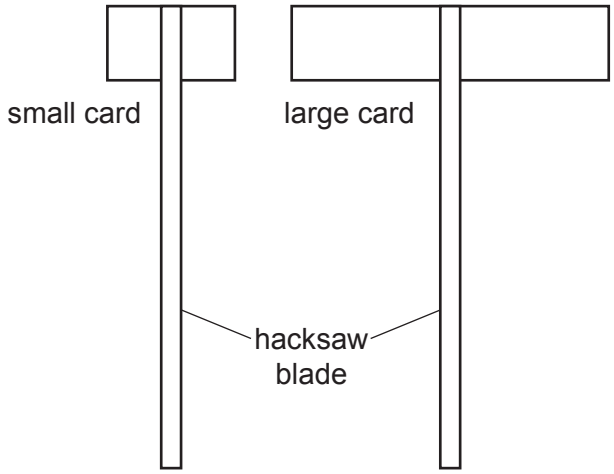

Fig. 3.3

.....

.....

.....

.....

.....

.....

.....

.....

.....

.....

.....

.....

.....

.....

.....

© OCR 2021

SECTION B

Answer **all** the questions.

4 This is a question about the properties of different types of radiation.

Fig. 4.1 shows parts of the tracks of three different types of radiation (moving from left to right) directed at various types of shielding.

(a)

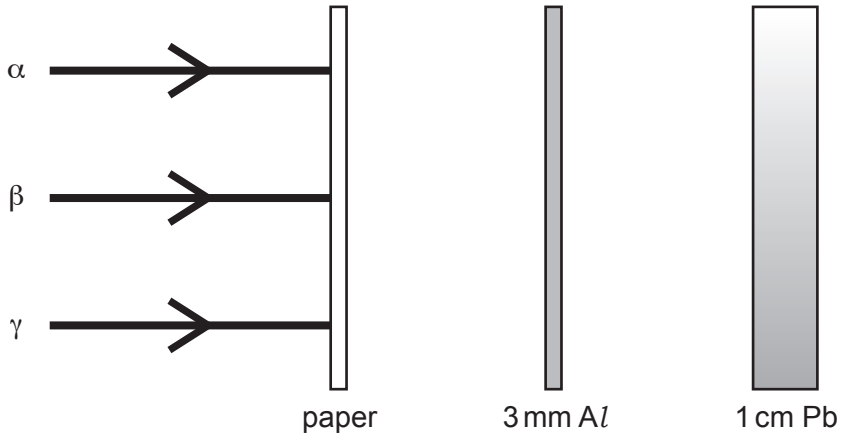

Fig. 4.1

(i) Complete the tracks by drawing on **Fig. 4.1** continuing the lines through each material unless a material absorbs 100% of the incident radiation. **[1]**

Table 4.1 shows some properties of two isotopes of Xenon.

Radioisotope	Radiation emitted
xenon-133m	gamma
xenon-135	beta

Table 4.1

(ii) Using the information in **Table 4.1** suggest and explain which isotope of xenon should be used as a medical imaging tracer. Consider the effect on the patient of each isotope in your answer.

.....

.....

.....

..... **[2]**

© OCR 2021

Another noble gas that is used as a medical tracer is Krypton-81m.

(iii) The parent isotope of krypton-81m is rubidium-81.

Complete the following decay equation for the production of krypton-81m. **[2]**

$$^{81}_{\ldots\ldots}\mathrm{Rb} \rightarrow {}^{81m}_{36}\mathrm{Kr} + {}^{0}_{1\ldots\ldots} + {}^{0}_{0}\nu$$

(iv) Krypton-81m has a half-life of only 13 seconds, whilst rubidium-81 has a half-life of 4 hours.

Suggest why hospital stocks do not lose their activity before patients can be seen.

.....

..... **[1]**

(b) A student is working on an experiment to find effective shielding for a radioactive isotope. They are using the apparatus as shown in **Fig. 4.2**.

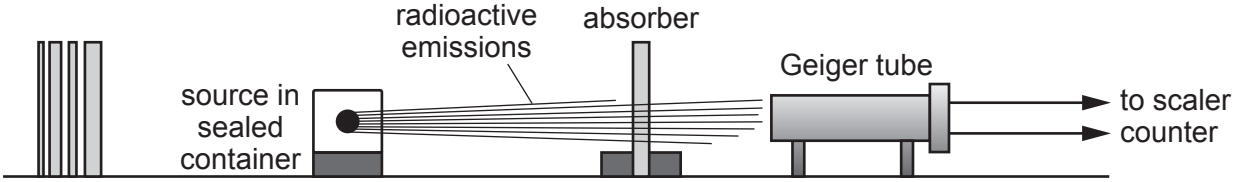

Fig. 4.2

(i) Suggest and explain **one** safety precaution required when handling a source of ionising radiation.

.....

.....

.....

..... **[2]**

(ii) Before taking any measurements with the absorber and source in place, the student takes several readings of the count rate.

Explain why they do this.

.....

.....

.....

..... **[2]**

© OCR 2021

(c) The student gathers the following data.

Shielding thickness, *x* / cm	**Count rate / s^{-1}**	**Corrected count rate / s^{-1}**
0	1250	1240
1	915	905
2	636	626
3	475	465
4	353	343
5	240	230
6	182	172
7	130	120
8	94	84
9	70	60
10	48	38

Table 4.2

Question 4(c) continues on page 14

© OCR 2021

The student plots a graph of the data.

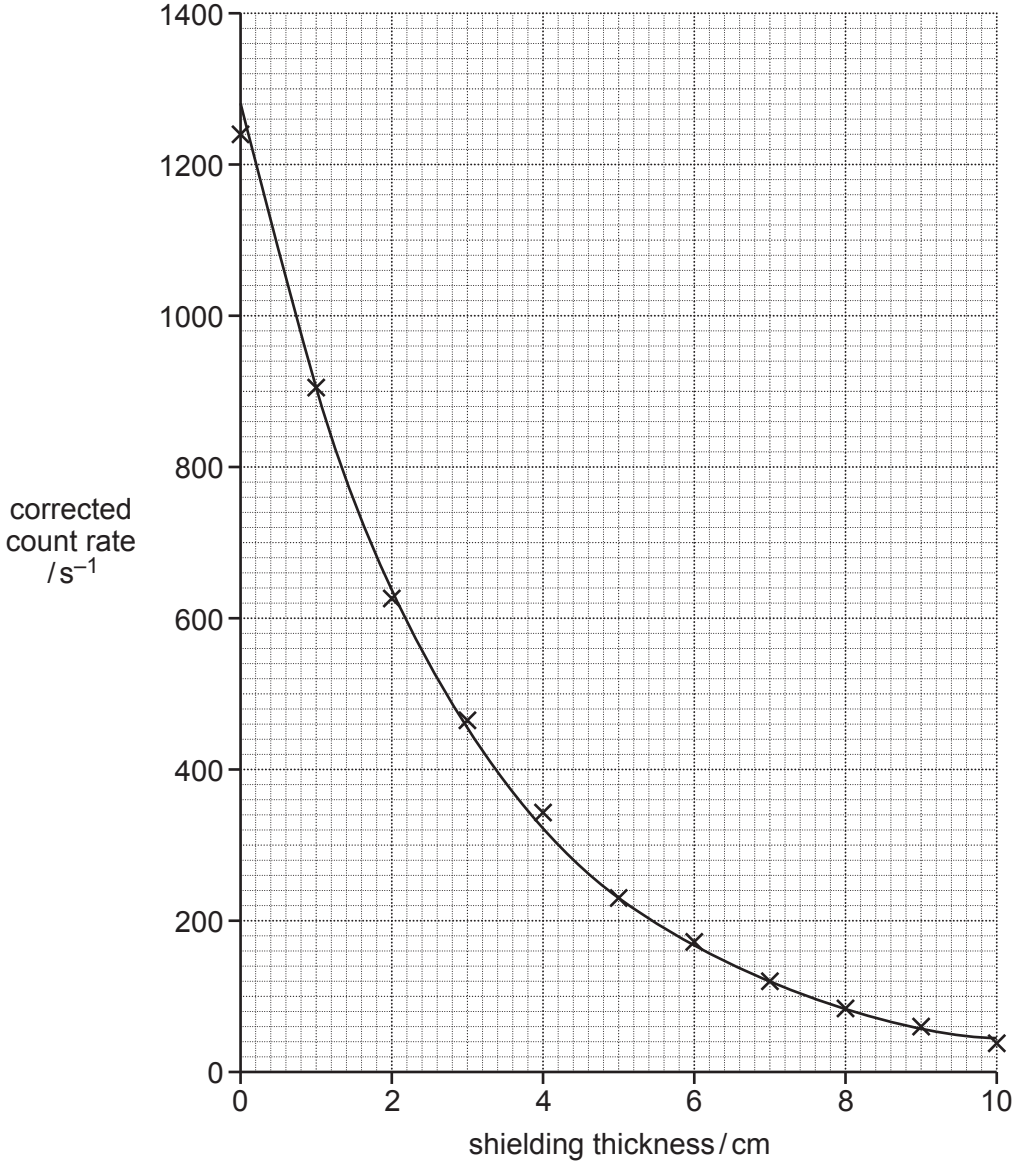

Fig. 4.3

© OCR 2021

The "half thickness value", $x_{\frac{1}{2}}$ for a particular shielding material and type of radiation is often used in industry, and is the value of the thickness of the shielding required to reduce the incident intensity of the radiation by half.

(i)* The student thinks that the relationship shown by the data of corrected count rate versus shielding thickness is exponential.

Using the information provided in **Fig. 4.3** opposite and **Table 4.2** on page 13, describe and perform a mathematical test to support their conclusion. Calculate the half-thickness $x_{\frac{1}{2}}$, describing also the method you use to ensure you obtain a reliable value. **[6]**

.....

.....

.....

.....

.....

.....

.....

.....

.....

.....

.....

.....

.....

.....

.....

Additional answer space if required.

.....

.....

.....

.....

.....

© OCR 2021

The relationship for the variation of intensity of radiation with shielding thickness is given by the equation:

$I = I_0 e^{-\mu x}$

where I_0 is the incident radiation intensity, I is the intensity after shielding thickness, x, and μ is the linear attenuation coefficient.

After further analysis the student plots the graph shown in **Fig. 4.4** on page 17.

(ii) Using the equation $I = I_0 e^{-\mu x}$, and the information in **Fig. 4.4**, determine the value of the attenuation coefficient, μ.

attenuation coefficient = ... unit ..... **[4]**

© OCR 2021

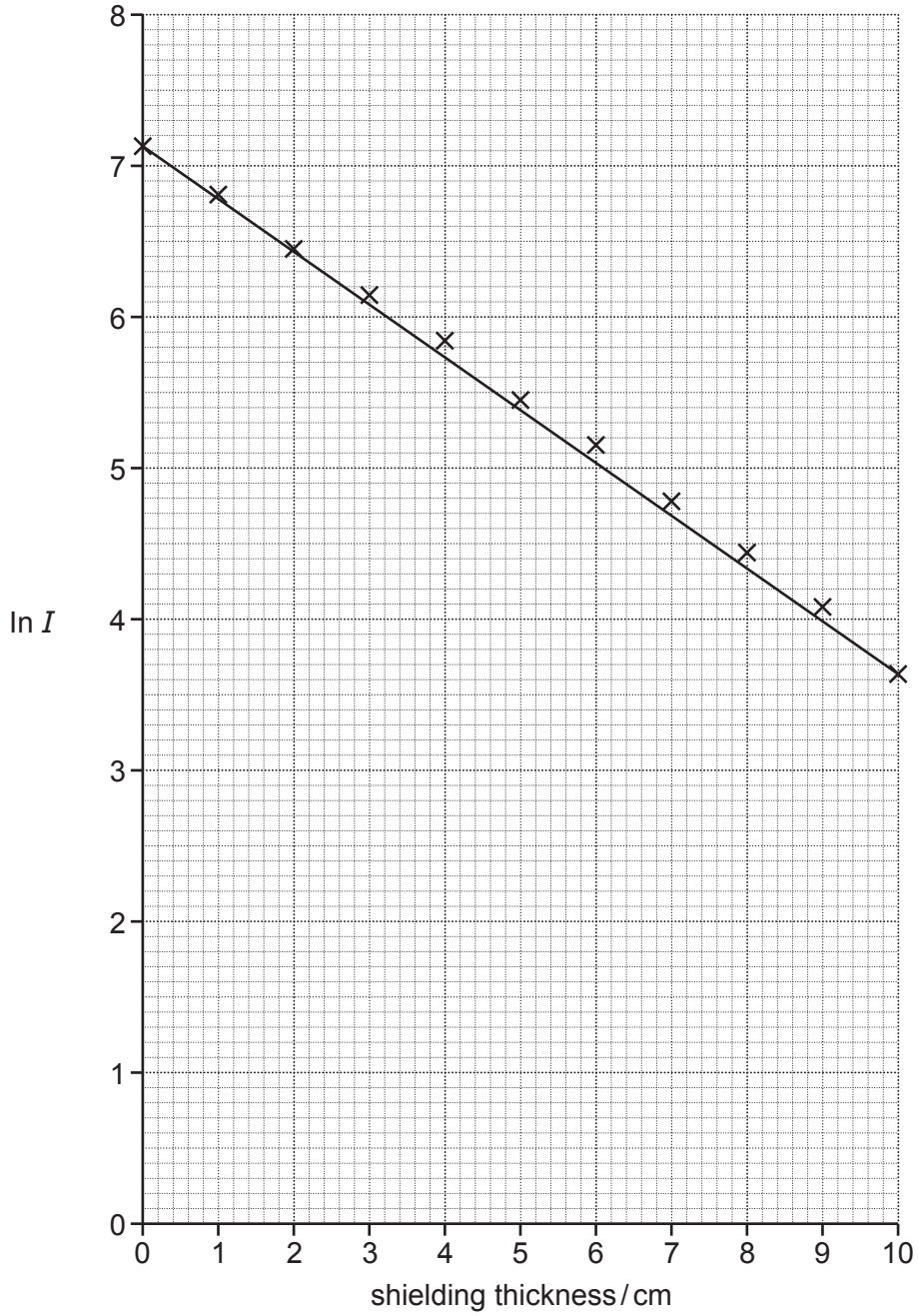

Fig. 4.4

END OF QUESTION PAPER

© OCR 2021

ADDITIONAL ANSWER SPACE

If additional space is required, you should use the following lined page(s). The question number(s) must be clearly shown in the margin(s).

© OCR 2021

© OCR 2021

OCR
Oxford Cambridge and RSA

Copyright Information

OCR is committed to seeking permission to reproduce all third-party content that it uses in its assessment materials. OCR has attempted to identify and contact all copyright holders whose work is used in this paper. To avoid the issue of disclosure of answer-related information to candidates, all copyright acknowledgements are reproduced in the OCR Copyright Acknowledgements Booklet. This is produced for each series of examinations and is freely available to download from our public website (www.ocr.org.uk) after the live examination series.

If OCR has unwittingly failed to correctly acknowledge or clear any third-party content in this assessment material, OCR will be happy to correct its mistake at the earliest possible opportunity.

For queries or further information please contact The OCR Copyright Team, The Triangle Building, Shaftesbury Road, Cambridge CB2 8EA.

OCR is part of the Cambridge Assessment Group; Cambridge Assessment is the brand name of University of Cambridge Local Examinations Syndicate (UCLES), which is itself a department of the University of Cambridge.

© OCR 2021