Oxford Cambridge and RSA

Thursday 14 October 2021 – Morning

A Level Physics B (Advancing Physics)

H557/02 Scientific literacy in physics

Time allowed: 2 hours 15 minutes

You must have:
- a clean copy of the Advance Notice Article (inside this document)
- the Data, Formulae and Relationships Booklet

You can use:
- a scientific or graphical calculator
- a ruler (cm/mm)

Please write clearly in black ink. **Do not write in the barcodes.**

Centre number | | | | | | Candidate number | | | | |

First name(s) _____

Last name _____

INSTRUCTIONS
- Use black ink. You can use an HB pencil, but only for graphs and diagrams.
- Write your answer to each question in the space provided. If you need extra space use the lined pages at the end of this booklet. The question numbers must be clearly shown.
- Answer **all** the questions.
- Where appropriate, your answer should be supported with working. Marks might be given for using a correct method, even if your answer is wrong.

INFORMATION
- The total mark for this paper is **100**.
- The marks for each question are shown in brackets **[ ]**.
- Quality of extended response will be assessed in questions marked with an asterisk (*).
- This document has **24** pages.

ADVICE
- Read each question carefully before you start your answer.

© OCR 2021 [601/4745/3]
DC (CJ/CB) 300372/6
OCR is an exempt Charity

SECTION A

Answer **all** the questions.

1 **(a)** Gravitational potential of a point mass and electrical potential of a point charge are both examples of inverse relationships.

(i) State what is meant by the term **gravitational potential**.

.....

..... **[1]**

(ii) Explain why gravitational potential is always a negative quantity.

.....

.....

.....

..... **[2]**

(iii) Explain why electrical potential can be positive or negative.

.....

.....

..... **[1]**

(b) The gravitational potential at the surface of the Earth is about $-6.3 \times 10^7\,\mathrm{J\,kg^{-1}}$.

Write down the minimum initial kinetic energy required for a 1 kg body to escape the gravitational field of the Earth when projected vertically from the surface. Explain your reasoning and suggest why this is a minimum value.

minimum initial kinetic energy = ... J

Explanation:

.....

.....

Suggestion:

.....

.....

[3]

© OCR 2021

(c) The Voyager 1 spacecraft was launched in 1977. It has travelled further into space than any other human-made device. In May 2019 it was more than 2.2×10^{13} m from the Sun, moving at a velocity of $1.7 \times 10^{4}\,\mathrm{m\,s^{-1}}$.

Calculate its total energy at this distance and explain the significance of your answer.

mass of Sun = 2.0×10^{30} kg

mass of Voyager spacecraft = 720 kg

total energy = ... J

Explanation:

.....

.....

.....

[4]

© OCR 2021

2 This question is about using capacitors as energy storage devices.

The diagram below shows a simple circuit which models how a capacitor can be used as a back-up power supply. The component is modelled as a single resistor.

In normal use the switch is closed and the p.d. across the component is 9.0 V. Opening the switch models a failure in the power supply.

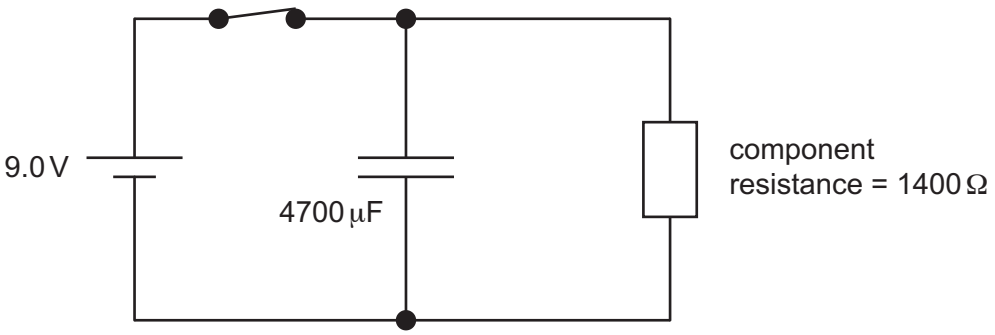

(a) **(i)** The operating range of the component is 5.2 V to 9.0 V.

Show that 3.5 s after the switch is opened the p.d. across the component will be about 5.3 V.

[2]

(ii) Estimate the average power delivered to the component during this time.
Explain why the value is an average.

average power = ... W

Explanation:

.....

.....

.....

[3]

© OCR 2021

In recent years, **supercapacitors** have been developed. These components charge and discharge in a similar manner to standard capacitors but can have capacitances of more than 10 000 F.

These can be used as back-up power supplies in many circumstances.

(b) A 120 F supercapacitor has an internal resistance of 30 mΩ. At time t = 0.0 s it stores 300 J.

Calculate the minimum time taken for the capacitor to transfer 250 J through discharging. Suggest why this is a minimum value.

time = ... s

Suggestion:

.....

.....

.....

[4]

© OCR 2021

3 This question is about the power output of the Sun.

A student places an aluminium block with a matt black face in direct sunlight, facing the Sun so that the solar radiation strikes the face as shown in the diagram below. The block has a temperature sensor embedded within it.

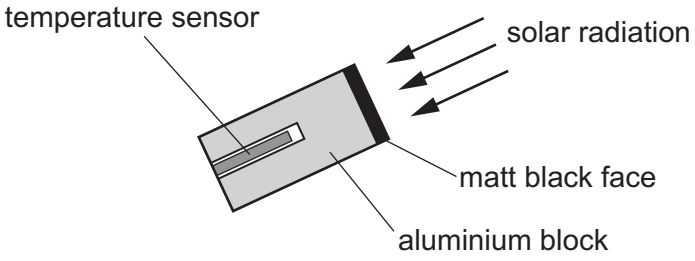

After ten minutes the temperature of the block has risen by 2.1 K.

(a) Use the data below to calculate the power per square metre of the radiation incident on the block. You may assume that all the energy incident on the face is retained as internal energy of the block.

Mass of block = 0.28 kg

Area of matt black face = 0.0013 m^2

specific thermal capacity of aluminium = 920 J kg^{-1} K^{-1}

power per square metre = ... W m^{-2} **[2]**

(b) The power per m^2 of solar radiation of all wavelengths striking the top of the Earth's atmosphere is 1.4 kW m^{-2}. The distance from the Earth to the Sun is 1.5×10^{11} m.

Show that these figures suggest that the power output of electromagnetic radiation of the Sun is about 4×10^{26} W.

[2]

© OCR 2021

(c) The ultimate source of the Sun's energy is the fusion of hydrogen into helium. This is a three-stage process which can be summarised in the single equation below.

$$4\,{}^{1}_{1}\mathrm{H} \rightarrow {}^{4}_{2}\mathrm{He} + 2\,{}^{0}_{1}\mathrm{e} + 2\,{}^{0}_{0}\gamma + 2\,{}^{0}_{0}\nu$$

(i) Explain how the equation shows that lepton number is conserved in the fusion reactions.

.....

.....

.....

..... **[2]**

(ii) Use the data below to calculate an estimate of the number of fusion three-stage reactions occurring in the Sun each second. 98% of the energy released in the process consists of electromagnetic radiation in the form of gamma ray photons.

power output of Sun (electromagnetic radiation) = 3.8×10^{26} W

mass of electron = 0.000549 u

mass of proton = 1.007276 u

mass of helium-4 nucleus = 4.001506 u

number of fusion reactions per second = ... **[4]**

© OCR 2021

SECTION B

Answer **all** the questions.

4 This question is about the macroscopic behaviour of a metal under tension and a model of the microscopic structure of the metal.

A 3.951 m length of copper wire with cross-sectional area $5.90 \times 10^{-8}\,m^2$ extends to a length of 3.953 m when a tensile force of 3.43 N is applied.

(a) Calculate the Young modulus of the sample.

Young modulus = ... Pa **[2]**

(b) The microscopic structure of copper can be pictured as planes of atoms as shown in the diagram.

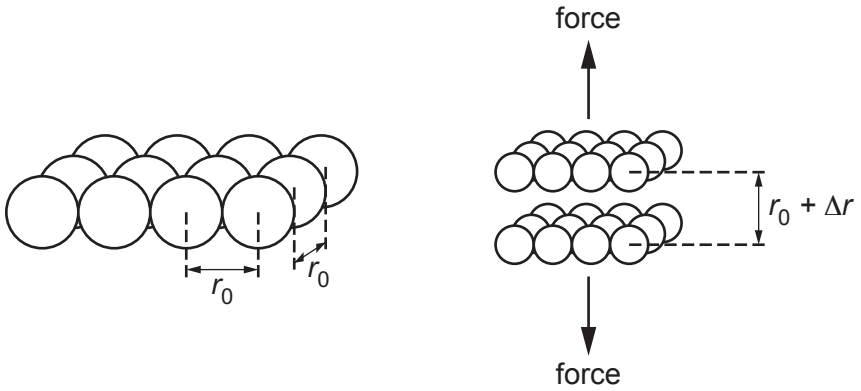

The distance between the centres of neighbouring atoms, r_0, is 2.3×10^{-10} m.

When the copper wire is not under tension the distance between the planes is also 2.3×10^{-10} m.

The bonds between the atoms can be considered to act like microscopic springs. When the copper is put under tension the separation between the planes increases to $r_0 + \Delta r$.

© OCR 2021

(i) Using data from the question, calculate the number of atoms in one plane of area $5.90 \times 10^{-8}\,m^2$ and use this value to calculate the tension force between pairs of atoms in neighbouring planes when the wire experiences a tension force of 3.43 N.

tension = ... N **[3]**

(ii) Using data from the question, calculate the increase in distance of separation Δr of the planes of copper atoms when the wire experiences a tension force of 3.43 N.

increase in separation = ... m **[2]**

(iii) Use your answers to **(b)(i)** and **(b)(ii)** to calculate the force constant k between a pair of copper atoms.

force constant = ... $N\,m^{-1}$ **[2]**

© OCR 2021

(c)* This simple model of the microscopic structure of copper cannot be used to predict its yield stress.

Describe how an improved model can predict the way in which metals under stress fail in different ways.

You should include an explanation of the term **yield stress** in your answer and describe how the macroscopic properties of metals can be changed by making changes to their microscopic structure. You may include diagrams in your answer. **[6]**

.....

.....

.....

.....

.....

.....

.....

.....

.....

.....

.....

.....

.....

.....

.....

© OCR 2021

Additional answer space if required.

.....

.....

.....

.....

.....

.....

Question 5 begins on page 12

© OCR 2021

5 This question is about oscillations.

A 0.84 kg mass is attached to two springs as shown in **Fig. 5.1**. The mass is displaced 0.24 m from the equilibrium point and released. There is negligible friction between the mass and the surface.

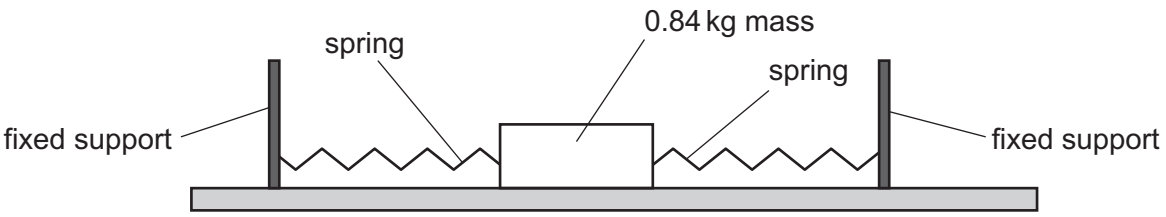

Fig. 5.1

(a) The mass oscillates between the springs with a time period of 1.3 s.

Calculate the spring constant *k* of the system.

spring constant = ... $N\,m^{-1}$ **[2]**

(b) Calculate the maximum velocity of the mass.

maximum velocity = ... $m\,s^{-1}$ **[3]**

(c) Explain why the kinetic energy of the oscillator will equal the elastic potential in the system when its displacement = $\frac{\text{maximum displacement}}{\sqrt{2}}$.

.....

.....

.....

..... **[2]**

© OCR 2021

(d) Calculate the time interval between releasing the mass from its position of maximum displacement and the first time the kinetic energy of the mass is equal to the elastic potential energy of the system.

time = ... s **[2]**

(e) A powerful magnet is fixed to the side of the mass as shown in **Fig. 5.2**. An aluminium sheet is placed below the mass. The friction between the mass and the metal surface is still negligible.

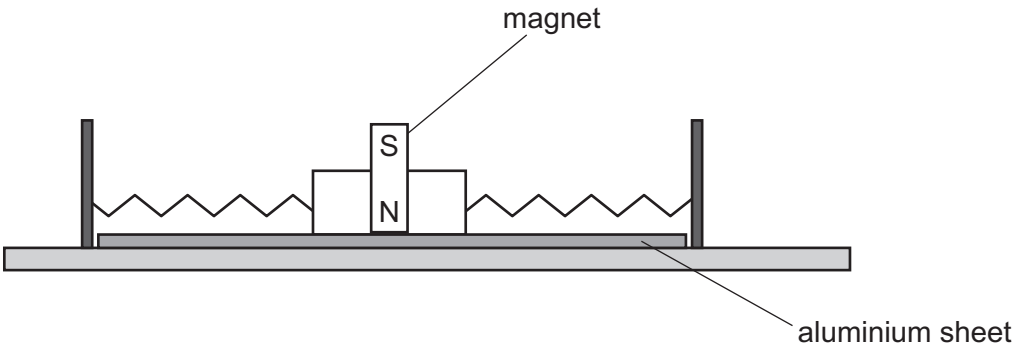

Fig. 5.2

When the experiment is repeated with the magnet and sheet present, the amplitude of oscillations falls rapidly due to eddy currents in the sheet.

Explain how these currents are formed and how they transfer energy away from the oscillation.

.....

.....

.....

.....

.....

.....

.....

.....

.....

..... **[4]**

© OCR 2021

(f) At a height of 632 m, the Shanghai Tower is the world's second tallest building. A huge pendulum which oscillates at the natural frequency of the building reduces the effect of the wind. The oscillations of the pendulum are damped with hydraulic pistons and electromagnetic dampers. **Fig. 5.3** shows the tower with its electromagnetic damper.

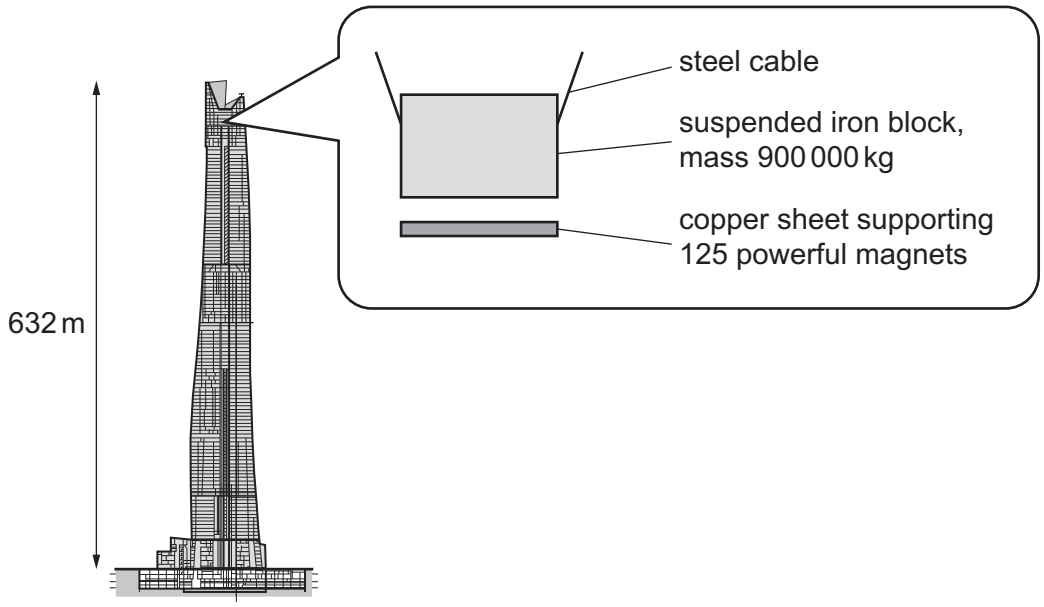

Fig. 5.3 Shanghai Tower. Pendulum diagram not to scale. Hydraulic dampers not illustrated.

Suggest how this system reduces the motion of the building in winds and explain the purpose of the damping systems.

.....

.....

.....

.....

.....

.....

.....

..... **[3]**

© OCR 2021

6 This question is about the conductivity of metals.

Fig. 6.1 shows a circuit used to determine the conductivity of nichrome wire.

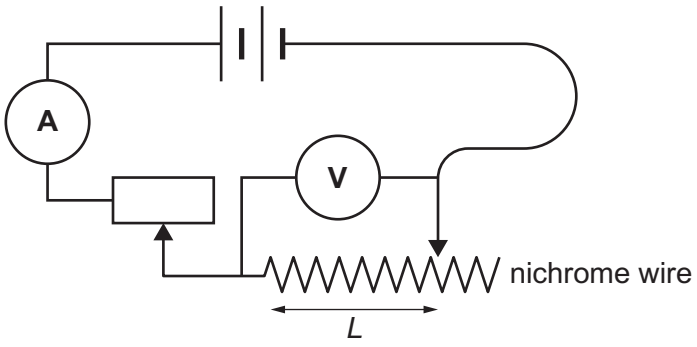

Fig. 6.1

The length *L* of nichrome wire the current passes through is varied. The variable resistor is used to keep the current in the circuit constant.

(a) State and explain why it is important to keep the current constant when determining the resistivity of the nichrome wire.

.....

.....

.....

..... **[2]**

© OCR 2021

(b) **Fig. 6.2** shows a graph of the results obtained using the apparatus.

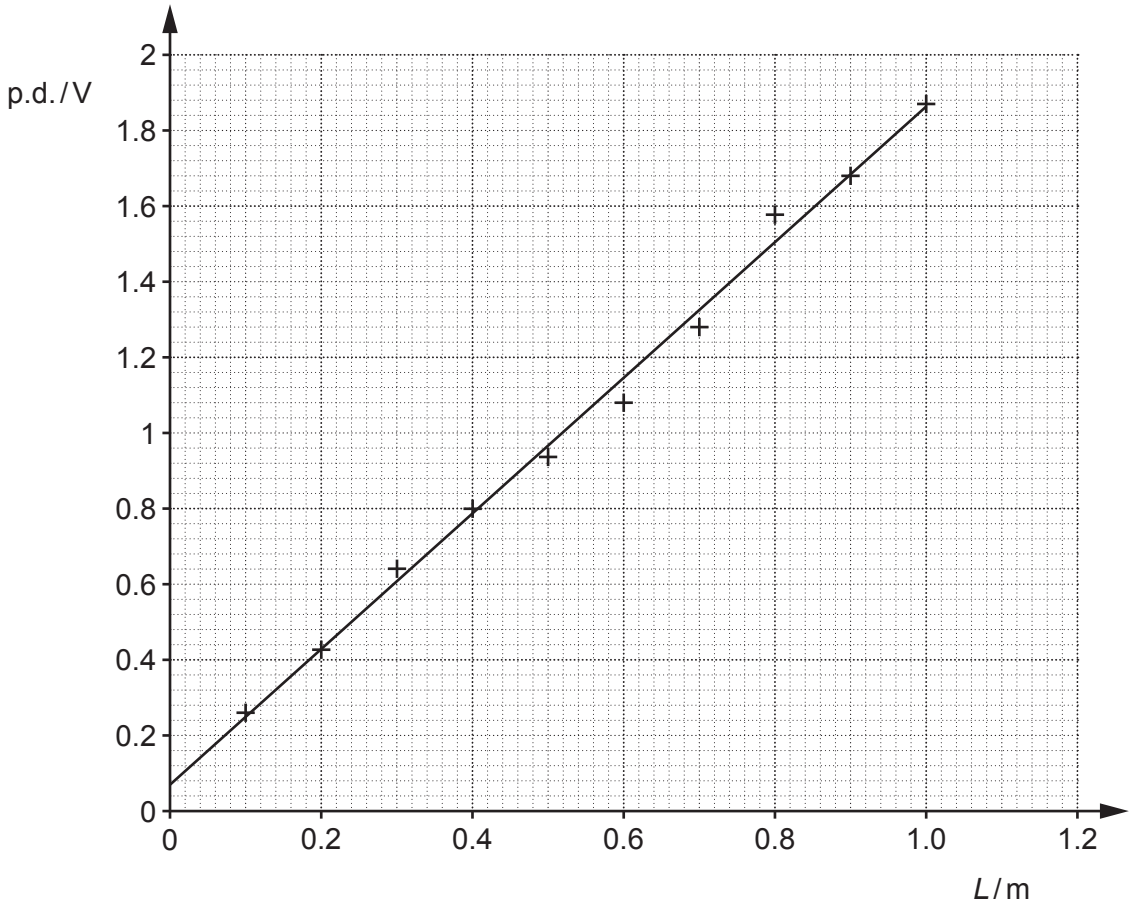

Fig. 6.2

(i) State how the graph shows that there is a systematic error in the data and suggest a possible cause of the error.

.....

.....

.....

..... **[2]**

(ii) Calculate the gradient of the line, making your method clear.

gradient = ... $V\,m^{-1}$ **[2]**

© OCR 2021

(iii) Use the value from **(ii)** and the data below to calculate the conductivity of the wire.

current through wire = 0.30 A
diameter of wire = 5.6×10^{-4} m

conductivity = ... $S\,m^{-1}$ **[3]**

(c) The experiment was repeated with nichrome wire of diameter 4.2×10^{-4} m carrying the same current of 0.30 A. The repeated experiment gave a different value for the conductivity of nichrome.

Suggest and explain why the second experiment gave a different value.

.....

.....

.....

..... **[2]**

(d) Metals have far higher electrical conductivities than insulators.

Explain this difference by referring to the microscopic properties of both classes of materials.

.....

.....

.....

.....

.....

.....

.....

..... **[3]**

© OCR 2021

SECTION C

Answer **all** the questions.

This section is based on the Advance Notice Article, which is an insert.

7 This question is about the longitudinal resolution of ultrasound pulses used in medical imaging (lines 112–124).

An ultrasound scanner emits an ultrasound pulse into tissue which reflects at the boundary between tissue and a layer of fat. The time interval between the emission of the pulse and return is 15.5 μs.

(a) Calculate the distance between the scanner and the layer of fat.

velocity of sound in tissue = 1540 m s^{-1}

distance = ... m **[1]**

(b) The frequency of the ultrasound used is 3.5 MHz and each pulse lasts 1 μs.

Calculate the longitudinal resolution of the pulse.

longitudinal resolution = ... m **[3]**

© OCR 2021

8 The figure below reproduces the ultrasound scan shown in the article on page 5.

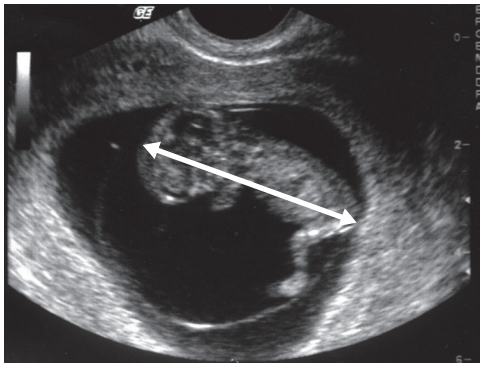

The length of the foetus indicated by the double-headed arrow is 39 mm. The whole image measures 920 × 700 pixels.

(a) Calculate the resolution of the image.

resolution = ... mm **[2]**

(b) The image size is 644 000 bits.

Explain why this suggests that each pixel in the image is either white or black and suggest how the image appears to show shades of grey.

Explanation:

.....

.....

Suggestion:

.....

.....
[2]

© OCR 2021

9 This question is about the spreading and attenuation of sound in air (lines 39–60).

(a) **(i)** A bat emits a pulse from a single point. The intensity of the sound emitted varies with distance from that point in an inverse square relationship. The pulse strikes an object at distance *R*. The reflected pulse also spreads in an inverse square manner.

State what is meant by the term **inverse square relationship** and explain why the intensity of the echo the bat receives is given by the equation

intensity of echo = intensity of original pulse / R^4.

You can assume that there is no absorption or scattering of the sound by the air and that all the energy incident on the object is reflected.

.....

.....

.....

..... **[2]**

(ii) A pulse emitted by the bat returns after reflection from a small object at a distance of 2.4 m.

Calculate the change in power in decibels (dB) of the pulse from its emission to its return, assuming that there is no absorption or scattering of the sound and that all the energy incident on the object is reflected.

change in power = ... dB **[3]**

© OCR 2021

(b) **(i)** Ignoring the effects of spreading, the power of a sound wave of frequency 100 kHz falls to 93% of its original value after travelling 0.1 m.

Show that the attenuation coefficient of air for sound of frequency 100 kHz is about $0.7\,m^{-1}$.

[2]

(ii) By considering only the effects of spreading **and** attenuation calculate the difference in power in decibels between the transmitted pulse and detected echo when a bat sends an ultrasound pulse of frequency 100 kHz which strikes a moth at a distance of 3.0 m. Assume that the bat and the moth each acts like a point source of sound and that all the energy incident on the moth is reflected.

power difference = ... dB **[4]**

Turn over for question 10

© OCR 2021

10* Explain how superposition is used by bats and in ultrasound scanners to increase the **power** of the ultrasound beam in a desired direction or location. You should include in your answer an explanation of the term **wave superposition**. You may include diagrams in your answer. **[6]**

.....

.....

.....

.....

.....

.....

.....

.....

.....

.....

.....

.....

.....

.....

.....

© OCR 2021

Additional answer space if required.

.....

.....

.....

.....

.....

.....

END OF QUESTION PAPER

© OCR 2021

ADDITIONAL ANSWER SPACE

If additional space is required, you should use the following lined page(s). The question number(s) must be clearly shown in the margin(s).

OCR
Oxford Cambridge and RSA

Copyright Information

OCR is committed to seeking permission to reproduce all third-party content that it uses in its assessment materials. OCR has attempted to identify and contact all copyright holders whose work is used in this paper. To avoid the issue of disclosure of answer-related information to candidates, all copyright acknowledgements are reproduced in the OCR Copyright Acknowledgements Booklet. This is produced for each series of examinations and is freely available to download from our public website (www.ocr.org.uk) after the live examination series.

If OCR has unwittingly failed to correctly acknowledge or clear any third-party content in this assessment material, OCR will be happy to correct its mistake at the earliest possible opportunity.

For queries or further information please contact The OCR Copyright Team, The Triangle Building, Shaftesbury Road, Cambridge CB2 8EA.

OCR is part of the Cambridge Assessment Group; Cambridge Assessment is the brand name of University of Cambridge Local Examinations Syndicate (UCLES), which is itself a department of the University of Cambridge.

© OCR 2021