Oxford Cambridge and RSA

Friday 8 October 2021 – Morning

A Level Physics B (Advancing Physics)

H557/01 Fundamentals of Physics

Time allowed: 2 hours 15 minutes

You must have:
- the Data, Formulae and Relationships Booklet

You can use:
- a scientific or graphical calculator
- a ruler (cm/mm)

Please write clearly in black ink. **Do not write in the barcodes.**

Centre number | | | | | | Candidate number | | | | |

First name(s) _____

Last name _____

INSTRUCTIONS
- Use black ink. You can use an HB pencil, but only for graphs and diagrams.
- Write your answer to each question in the space provided. If you need extra space use the lined pages at the end of this booklet. The question numbers must be clearly shown.
- Answer **all** the questions.
- Where appropriate, your answer should be supported with working. Marks might be given for using a correct method, even if your answer is wrong.

INFORMATION
- The total mark for this paper is **110**.
- The marks for each question are shown in brackets **[ ]**.
- Quality of extended response will be assessed in questions marked with an asterisk (*).
- This document has **44** pages.

ADVICE
- Read each question carefully before you start your answer.

© OCR 2021 [601/4745/3]
DC (PQ/FC) 300858/7
OCR is an exempt Charity

SECTION A

You should spend a maximum of 40 minutes on this section.

Write your answer for each question in the box provided.

Answer **all** the questions.

1 Which expression gives a quantity that can be expressed in watts?

A $F\,s$ where F is the force causing a body to move and s is its displacement

B $I^2 R$ where I is the current in a conductor of resistance R

C $m\,v$ where m is the mass of a body moving with velocity v

D $V\,I\,t$ where V is the potential difference across a conductor and I is the current through it, which passes for time t

Your answer ☐ **[1]**

2 The camera in a smartphone contains a CCD detector of 1136 pixels × 640 pixels.
Each pixel records in full RGB colour, encoded into three bytes of memory.

How much information is recorded in one image from the camera?

A 90.9 kbits

B 727 kbits

C 5.82 Mbits

D 17.4 Mbits

Your answer ☐ **[1]**

© OCR 2021

The following information is for use in questions **3** and **4**.

A series of experiments on stretching a spring gave the data plotted in this graph.
Analysis of the graph gives the information in the box.

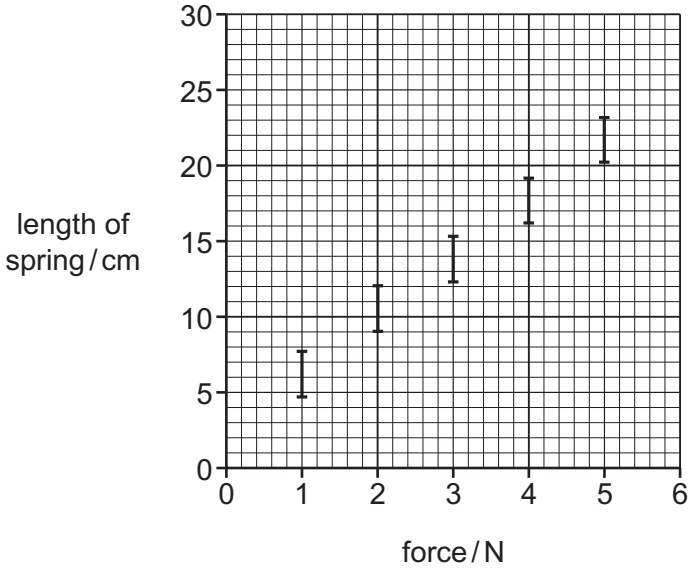

Best-fit gradient $m = 3.81$
Max gradient $m_a \approx 4.5$
Min gradient $m_b \approx 3.2$
$m_a - m \approx m - m_b \approx 0.6$ to 0.7
y-axis intercept = 2.57

3 Using the information in the box, which is the best estimate of the gradient of the graph, together with its uncertainty?

A $3.8 \pm 0.7\,\text{cm N}^{-1}$

B $3.8 \pm 1.4\,\text{cm N}^{-1}$

C $3.81 \pm 0.35\,\text{cm N}^{-1}$

D $4 \pm 2\,\text{cm N}^{-1}$

Your answer ☐ **[1]**

4 Which is the best estimate of the unstretched length of the spring?

A 0.5 cm

B 2.6 cm

C 4.5 cm

D 7.5 cm

Your answer ☐ **[1]**

© OCR 2021

The following information is for use in questions **5** and **6**.

The diagram shows a slide projector producing a magnified image on a distant screen. The slide is fixed in position and the lens and screen can be moved.

The slide is 4.0 cm from the lens and the screen is 10 m from the lens.

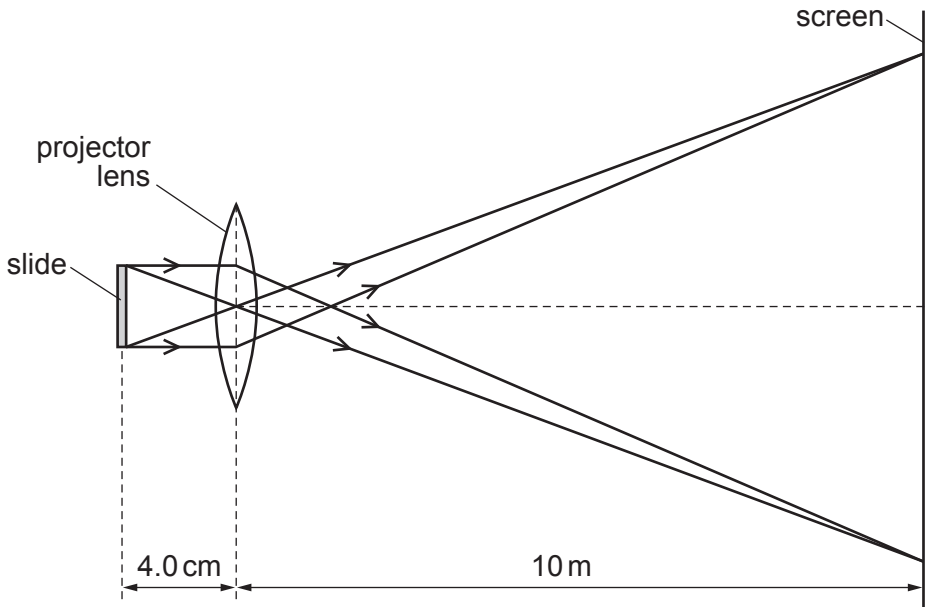

© OCR 2021

5 Which adjustments need to be made to produce a more magnified image?

	Screen	Lens
A	closer to the lens	closer to the slide
B	closer to the lens	further from the slide
C	further from the lens	closer to the slide
D	further from the lens	further from the slide

Your answer ☐ **[1]**

6 The power of the projecting lens in dioptres, D is

A 0.040

B 0.071

C 25.0

D 25.1

Your answer ☐ **[1]**

© OCR 2021

7 The chart displays the strength and toughness of various materials.

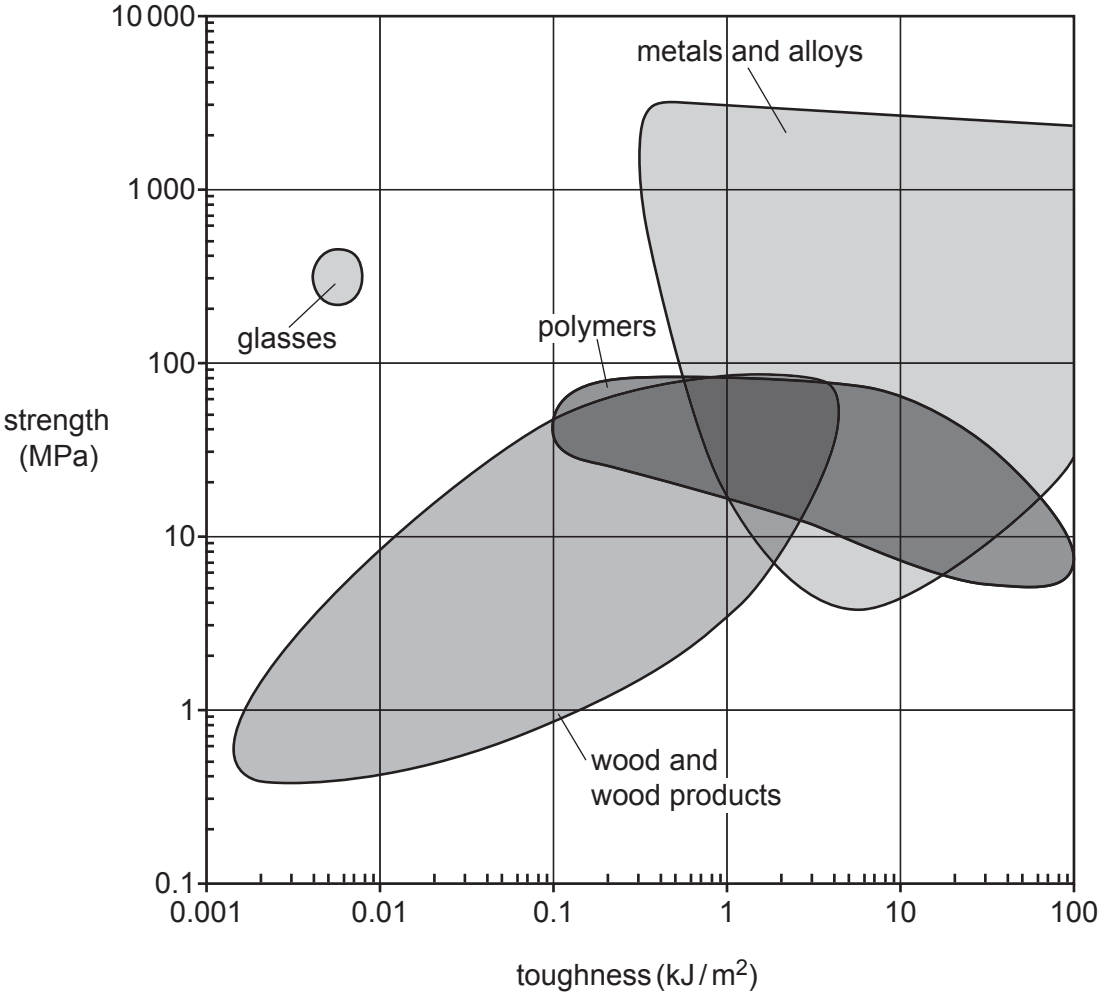

Which type of material is weak and brittle?

A glasses

B metals and alloys

C polymers

D wood and wood products

Your answer ☐ **[1]**

© OCR 2021

8 The following three statements were made by students to explain the relationship between current I in an ohmic resistor and the p.d. V across it.

1 I is directly proportional to V

2 I and V are positively correlated

3 the ratio I/V becomes smaller as V increases

Which statements are correct?

A 1, 2 and 3 are correct

B only 1 and 2 are correct

C only 2 and 3 are correct

D only 1 is correct

Your answer ☐ **[1]**

9 The planet Mercury has an orbital period of 88.0 Earth days.

The mean angular velocity of its orbit, in $\text{rad}\,\text{s}^{-1}$, is

A 4.13×10^{-7}

B 8.26×10^{-7}

C 4.73×10^{-5}

D 4.96×10^{-5}

Your answer ☐ **[1]**

© OCR 2021

10 A car of mass 1100 kg moves up a hill of gradient 25°.

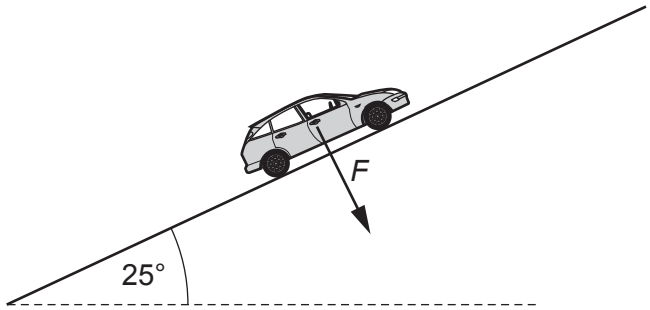

The force *F* is a component of the weight of the car.
What is the value of *F*, to **2** significant figures?

A 4600 N

B 9800 N

C 12 000 N

D 26 000 N

Your answer ☐ **[1]**

© OCR 2021

The following information is for use in questions **11** and **12**.

The questions are about the oscillation of an object suspended on a spring.

The graph shows the variation in displacement with time from its equilibrium position when the object is pulled down and released.

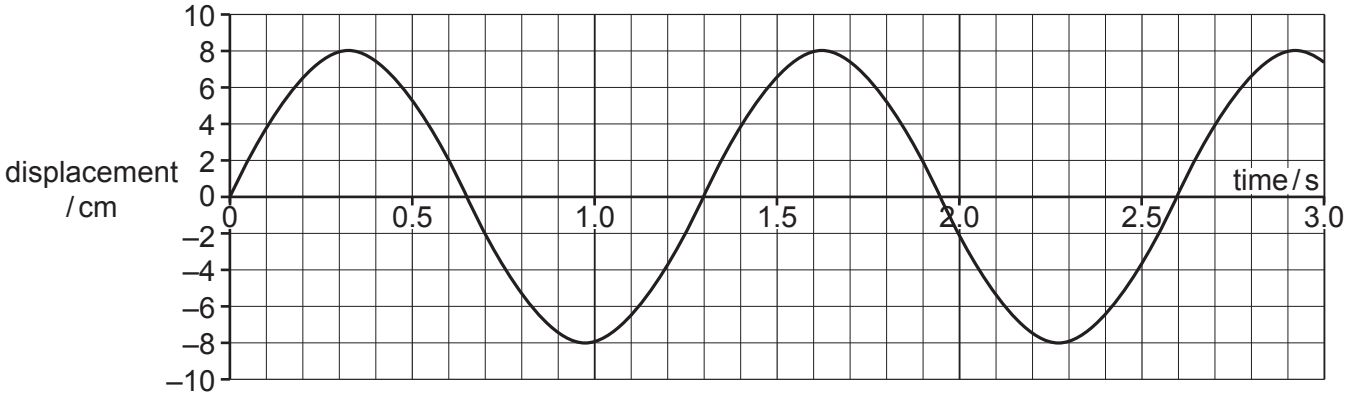

11 The maximum speed of the oscillating object is

A $0.08\,m\,s^{-1}$

B $0.24\,m\,s^{-1}$

C $0.39\,m\,s^{-1}$

D $39\,m\,s^{-1}$

Your answer ☐ **[1]**

12 The mass of the oscillating object is 600 g.

The spring constant *k* of the spring is

A $14\,N\,m^{-1}$

B $18\,N\,m^{-1}$

C $56\,N\,m^{-1}$

D $14\,000\,N\,m^{-1}$

Your answer ☐ **[1]**

© OCR 2021

13 Kirchhoff's Second Law states that the sum of the potential differences around any closed loop in the circuit must be zero.

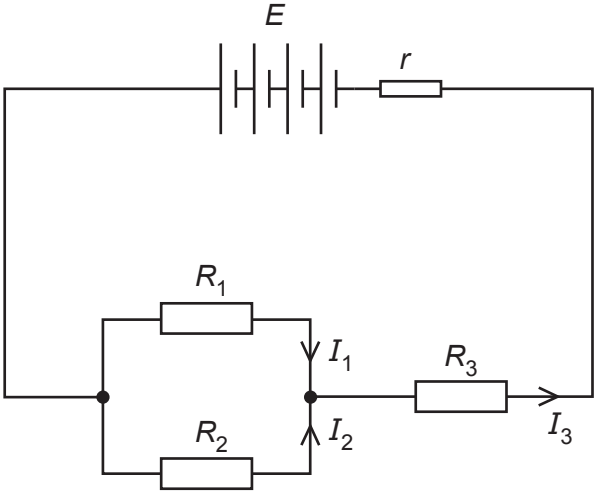

Here are three statements about the circuit above.

1 $I_3 r < E$

2 p.d. across R_1 = p.d. across R_2

3 p.d. across R_2 < p.d. across R_3

Which statements follow directly from Kirchhoff's Second Law?

A 1, 2 and 3

B only 1 and 2

C only 2 and 3

D only 1

Your answer ☐ **[1]**

14 Kirchhoff's First Law states that the sum of currents going into a junction is equal to the sum of currents coming out of that junction. Which conservation law is this equivalent to?

A conservation of charge

B conservation of energy

C conservation of mass

D conservation of momentum

Your answer ☐ **[1]**

© OCR 2021

15 A ball is thrown vertically upwards with an initial velocity of $24\,\mathrm{m\,s^{-1}}$ and is caught by the thrower a time t later.

To an **appropriate number** of significant figures, the time t is

A 2.4 s

B 2.45 s

C 4.89 s

D 4.9 s

Your answer ☐ **[1]**

16 A charged capacitor discharges through a resistor with the time constant $\tau = RC$.
What is the best explanation of the time constant τ?

A τ is the time for the charge stored to become half of its initial value

B τ is the time for the current from the capacitor to become one-third of its initial value

C τ is the time for the energy stored to become half of its initial value

D τ is the time for the p.d. across the capacitor to become $\frac{1}{e}$ of its initial value

Your answer ☐ **[1]**

17 What is the gain in potential when rising 1000 km above the surface of the planet Mars?

Mass of Mars = 6.4×10^{23} kg
Radius of Mars = 3400 km

A $2.9 \times 10^{6}\,\mathrm{J\,kg^{-1}}$

B $9.7 \times 10^{6}\,\mathrm{J\,kg^{-1}}$

C $1.3 \times 10^{7}\,\mathrm{J\,kg^{-1}}$

D $2.9 \times 10^{9}\,\mathrm{J\,kg^{-1}}$

Your answer ☐ **[1]**

© OCR 2021

18 A metal spike of mass 2.8 kg is dropped onto level ground from a height of 4.0 m, measured from the point of the spike. It penetrates into the ground a distance of 48 cm.

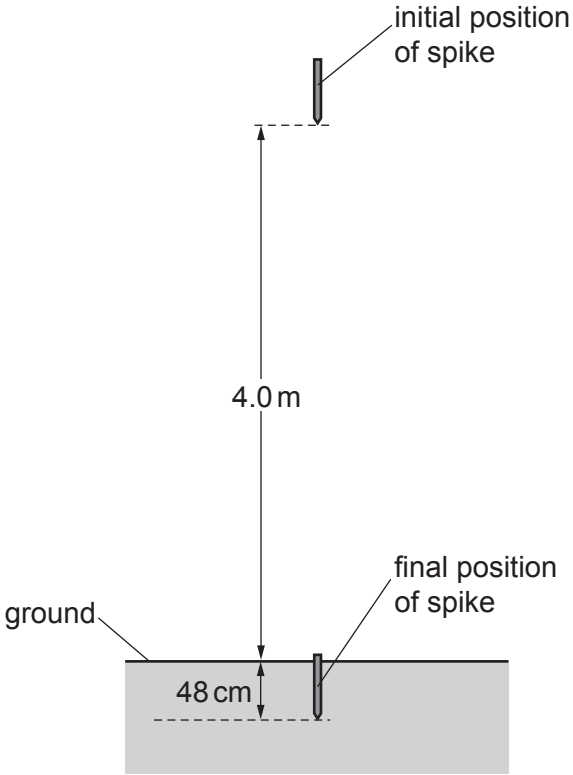

What is the mean force exerted on the spike by the ground as it penetrates?

A 2.3 N

B 82 N

C 230 N

D 260 N

Your answer ☐ **[1]**

19 A muon of rest energy = 106 MeV is travelling at a speed of 0.99 *c*.
The total energy of the muon is

A 133 MeV

B 249 MeV

C 751 MeV

D 5330 MeV

Your answer ☐ **[1]**

© OCR 2021

20 The hydrogen atom can be modelled as an electron standing wave. One simple version has one 'loop' of the standing wave fitting in the diameter of the atom, as shown in the diagram.

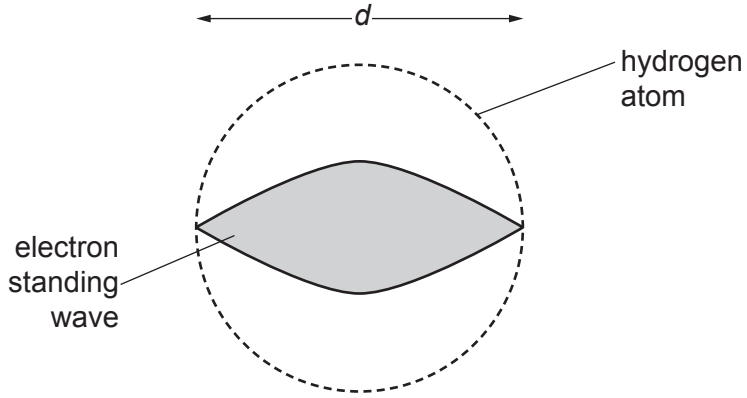

The atom is 'squeezed' so that the diameter *d* becomes smaller.

Here are three statements about the change to the electron.

1 The electron momentum increases.

2 The electron kinetic energy increases.

3 The electron potential energy becomes more negative.

Which statements are correct?

A 1, 2 and 3 are correct

B only 1 and 2 are correct

C only 2 and 3 are correct

D only 1 is correct

Your answer ☐ **[1]**

© OCR 2021

21 The graph shows the variation of the charge on a capacitor with the potential difference across that capacitor.

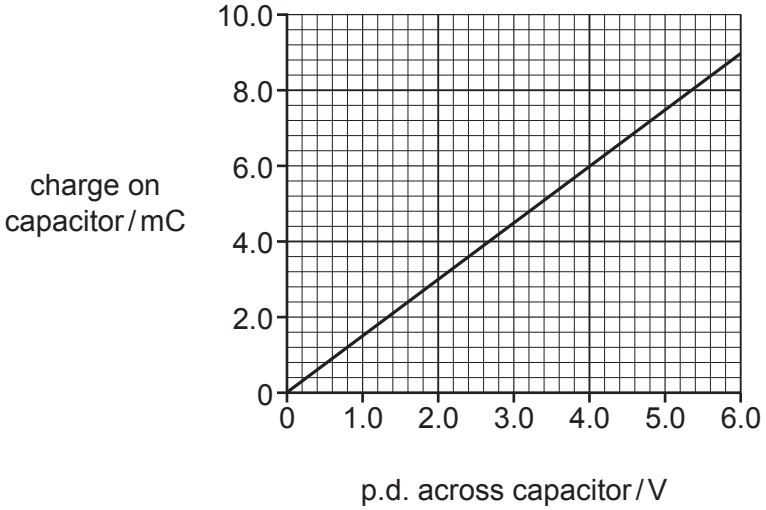

The capacitor is initially uncharged and the p.d. is gradually increased.
Use the graph to calculate the energy stored by the capacitor when the p.d. is 4.0 V.

A 0.012 J

B 0.024 J

C 12 J

D 24 J

Your answer ☐ **[1]**

© OCR 2021

22 Light of frequency *f* is incident normally on two slits in an opaque screen separated by a distance *d*. A pattern of maxima and minima is observed on a screen a distance *L* from the slits. Adjacent maxima are separated by a distance *x*.

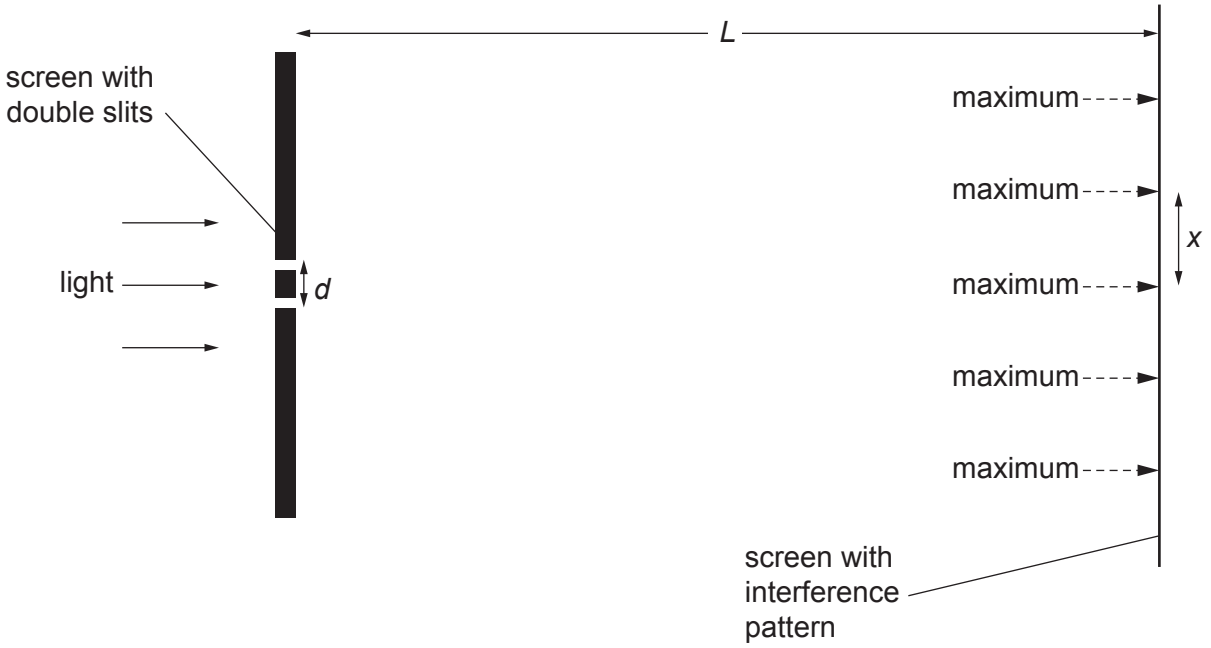

Which of the statements 1, 2 and 3 are correct?

1 Doubling *L* would double *x*

2 Reducing *d* would increase *x*

3 Increasing *f* would increase *x*

A 1, 2 and 3 are correct

B only 1 and 2 are correct

C only 2 and 3 are correct

D only 1 is correct

Your answer ☐ **[1]**

© OCR 2021

23 The diagram is a section through part of an electrical linear motor.
The motor contains a 50-turn coil of diameter 1.8 cm carrying a current of 0.16 A in a radial magnetic field of flux density 0.24 T where it meets the coil.

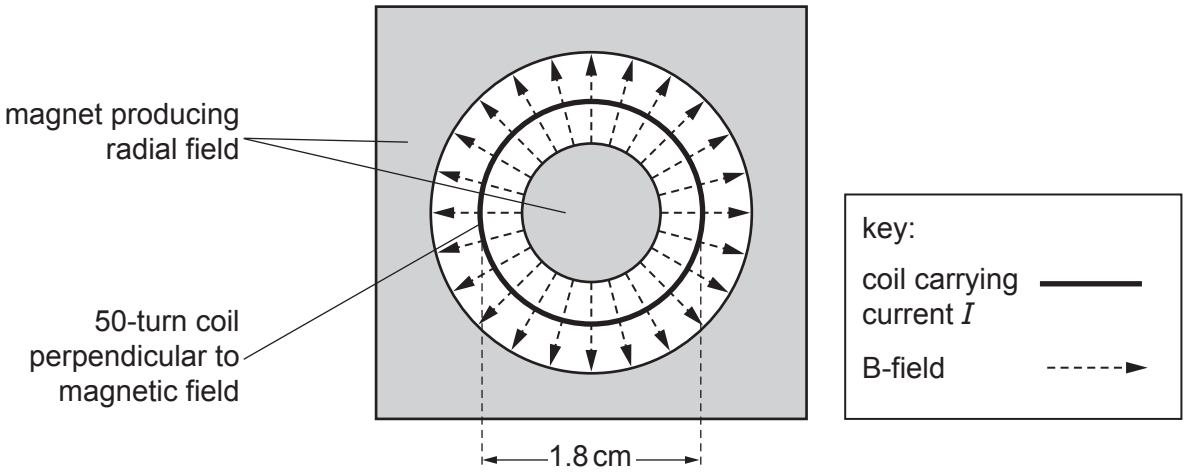

The magnetic force acting on the coil is

A 2.2 mN

B 0.11 N

C 0.22 N

D 11 N

Your answer ☐ **[1]**

© OCR 2021

24 The graph shows the variation of gravitational potential with radial distance *r* from the centre of the planet Mercury.

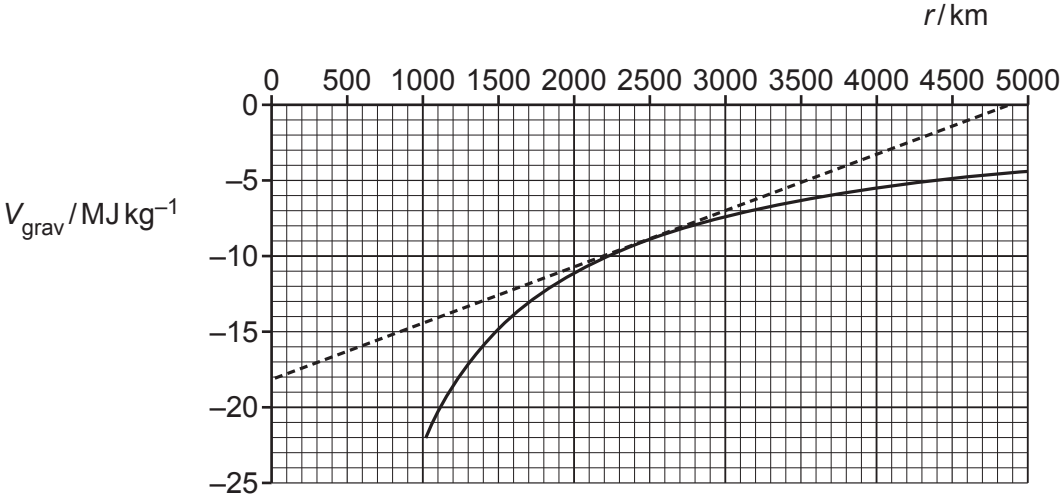

The mean radius of Mercury is 2440 km.
The straight line drawn on the graph is the tangent to the curve at this value of *r*.

From the graph, the magnitude of the gravitational field strength at the surface of the planet is

A $0.0037\,\text{N kg}^{-1}$

B $3.7\,\text{N kg}^{-1}$

C $9.0\,\text{N kg}^{-1}$

D $18\,\text{N kg}^{-1}$

Your answer ☐ **[1]**

© OCR 2021

25 The distance from the Earth to an asteroid is measured by sending a radar pulse to the asteroid at a known time and recording the time when the return pulse is detected.
The data from these measurements are given in the table.

Time pulse is sent	07 hours 59 min 50.0 s
Time return pulse is received	08 hours 00 min 17.2 s

The distance of the asteroid from Earth is

A 2.58 Gm

B 4.08 Gm

C 5.16 Gm

D 8.16 Gm

Your answer ☐ **[1]**

© OCR 2021

26 The diagram shows the refraction of a ray of light passing from water into glass.

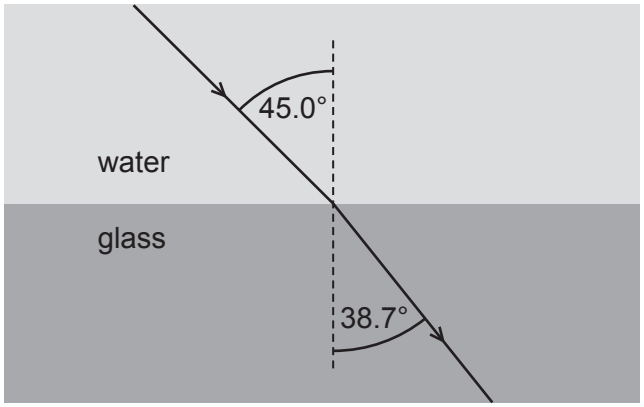

The refractive index for light travelling from vacuum into water is 1.33.

Which of the following is the speed of light in glass, expressed to **3** significant figures?

A $1.99 \times 10^8\,\mathrm{m\,s^{-1}}$

B $2.26 \times 10^8\,\mathrm{m\,s^{-1}}$

C $2.40 \times 10^8\,\mathrm{m\,s^{-1}}$

D $2.65 \times 10^8\,\mathrm{m\,s^{-1}}$

Your answer ☐ **[1]**

© OCR 2021

27 The diagram shows a combination of three resistors connected to a 6.0 V power supply of negligible internal resistance.

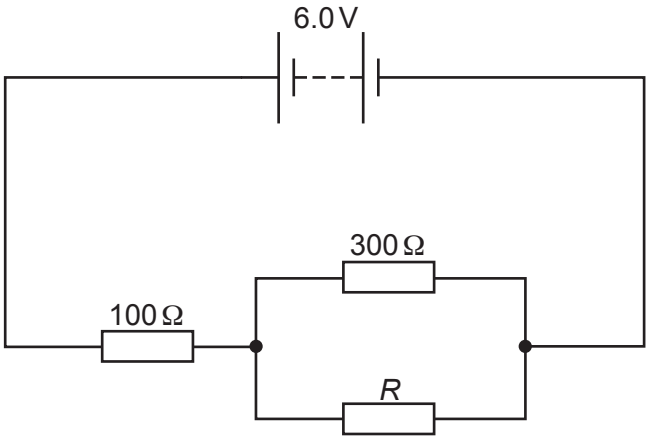

A voltmeter connected across resistor *R* reads 3.0 V.
What is the resistance of resistor *R*?

A 50 Ω

B 100 Ω

C 150 Ω

D 200 Ω

Your answer ☐ **[1]**

© OCR 2021

28 The graph shows the binding energy per nucleon for different nuclides.

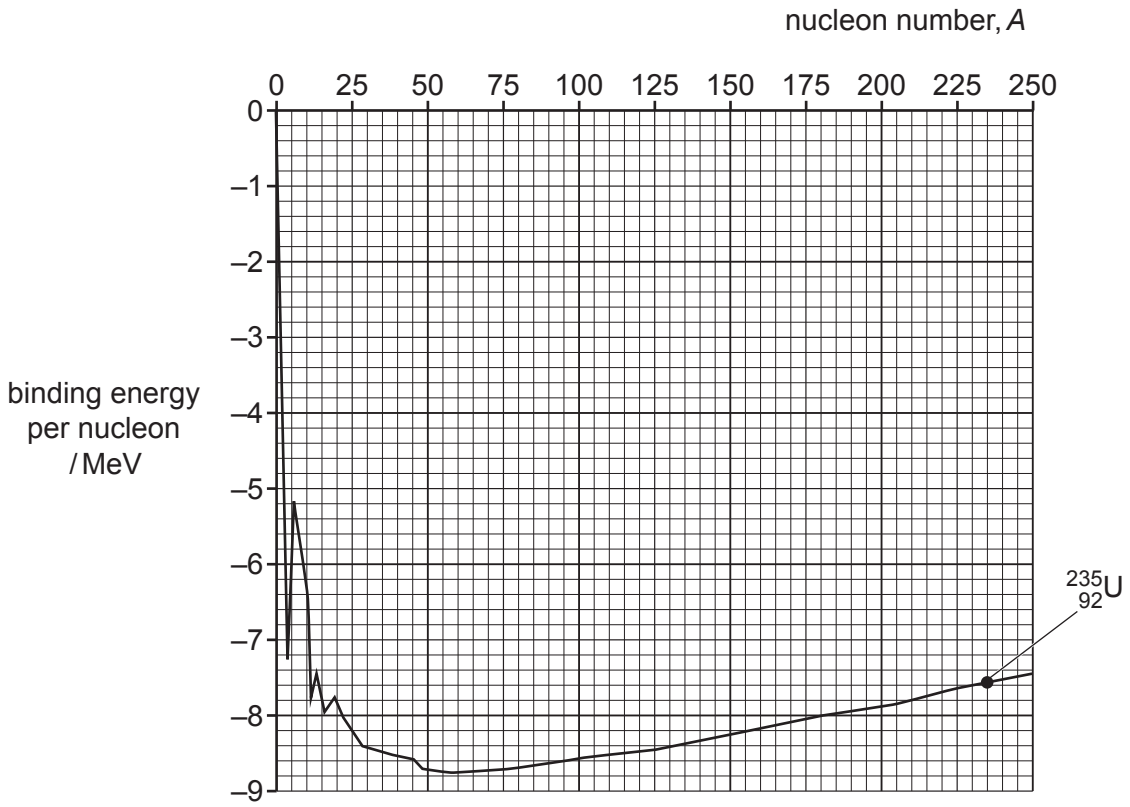

From the graph, what is the energy released when one nucleus of $^{235}_{92}U$ undergoes fission into one nucleus of $^{144}_{56}Ba$, one nucleus of $^{89}_{36}Kr$ and two neutrons?

A 9.3 MeV

B 170 MeV

C 1200 MeV

D 1800 MeV

Your answer ☐ **[1]**

© OCR 2021

29 The diagram shows the path of two alpha particles, each of initial kinetic energy 4.0 MeV, as they are scattered by a gold nucleus.

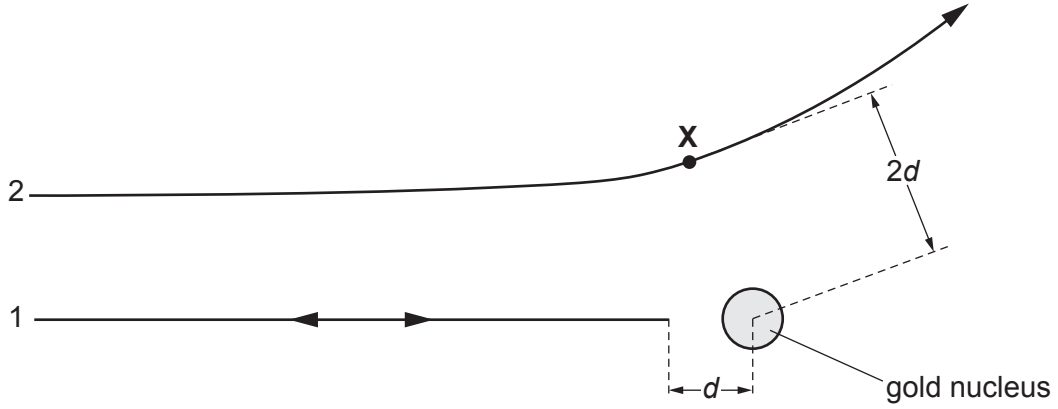

Alpha particle 1 approaches head-on towards the gold nucleus and is repelled back along its own path, with a closest distance of separation from the nucleus being *d*.
Alpha particle 2 follows the path shown, with a closest distance of separation from the nucleus being 2*d* at the point **X**.

What is the **kinetic energy** of alpha particle 2 at the point **X**?

A 0.0 MeV

B 2.0 MeV

C 3.0 MeV

D 4.0 MeV

Your answer ☐ **[1]**

© OCR 2021

30 The graph shows how the half-life $t_{1/2}$ of different beta-emitting radioactive nuclides varies with the energy E of the emitted beta-particles.

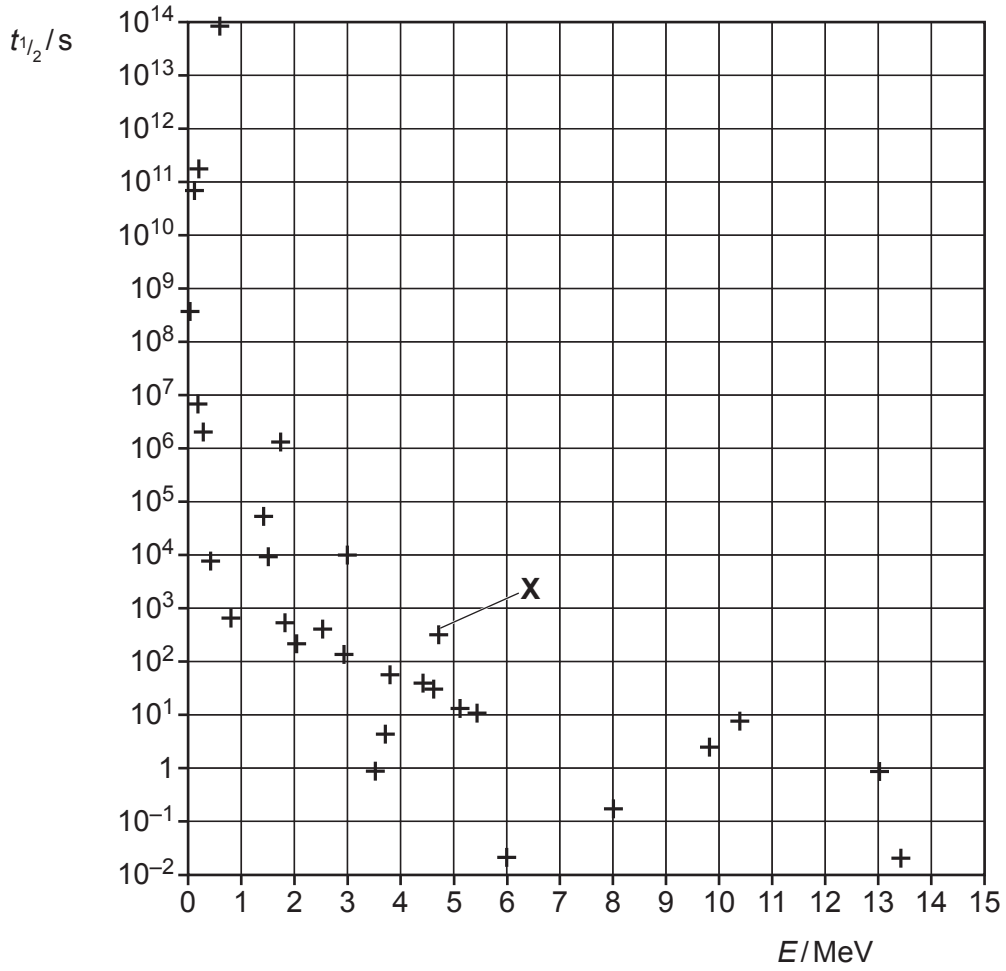

Which one of the following statements is true?

A Most beta-emitting nuclides have half-lives shorter than a day.

B Nuclides with shorter half-lives always emit higher energy particles than nuclides with longer half-lives.

C The half-life is inversely proportional to the particle energy.

D The nuclide labelled **X** has a half-life of 150 s.

Your answer ☐ **[1]**

© OCR 2021

SECTION B

Answer **all** the questions.

31 The STM image below shows an open ring of silver atoms.

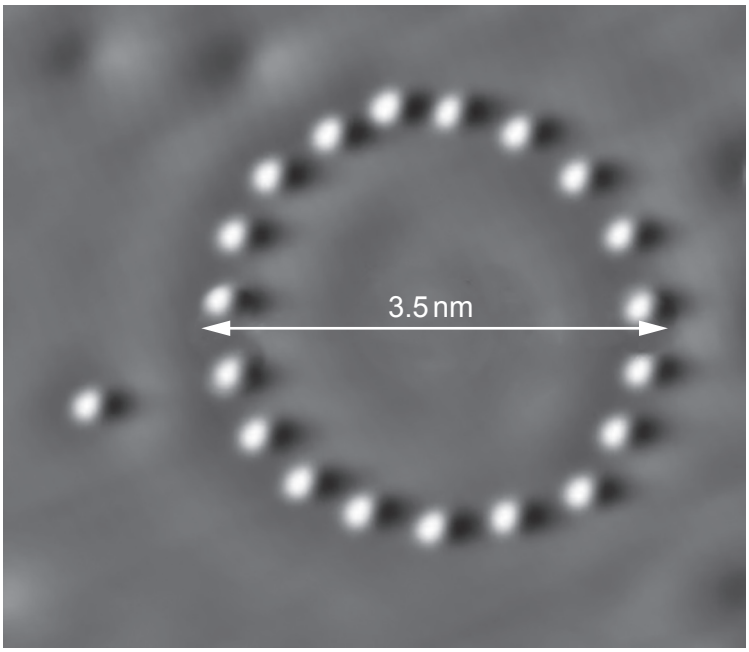

Use the scaled STM image to estimate the diameter of a silver atom.

diameter = ... nm **[3]**

© OCR 2021

32 The diagram shows a 2.0 ms interval of a waveform that is to be digitised.
The waveform contains noise at the level $V_{noise} \approx 0.4$ mV.

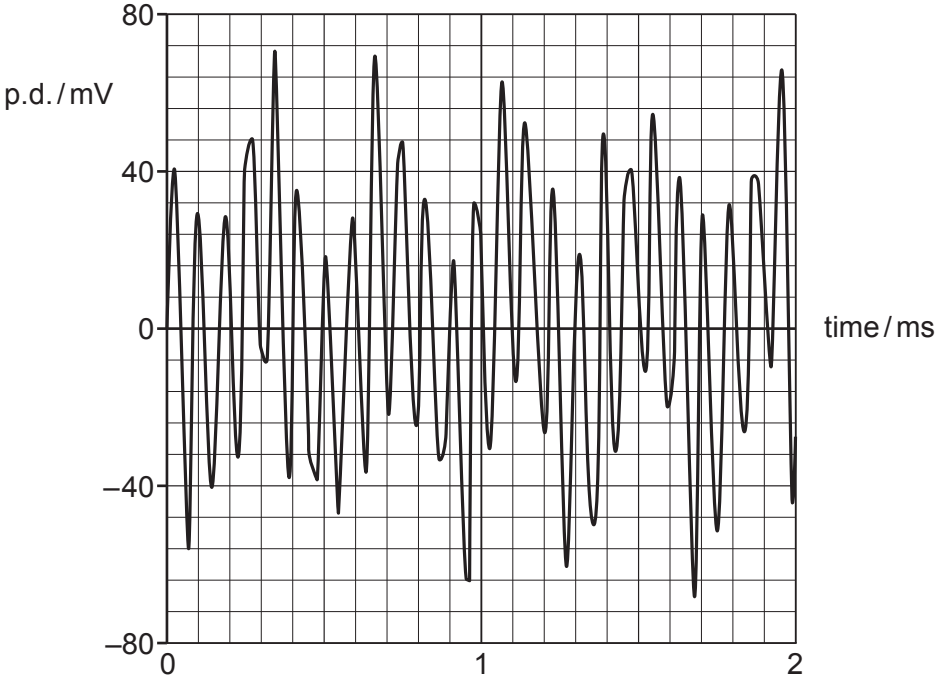

(a) Explain why the sampling frequency should be at least 25 kHz.

.....

.....

..... **[1]**

(b) Suggest and explain the number of bits per sample you would use to digitise this waveform.

.....

.....

.....

.....

..... **[2]**

© OCR 2021

33 The figures below show evidence of the Hubble law ($v = H_0 d$ where v is the velocity of the galaxy relative to Earth and d is the distance of the galaxy from Earth).

Fig. 33a shows Hubble's original galactic red-shift data (1929). **Fig. 33b** shows evidence from supernovae red-shift data (1998).

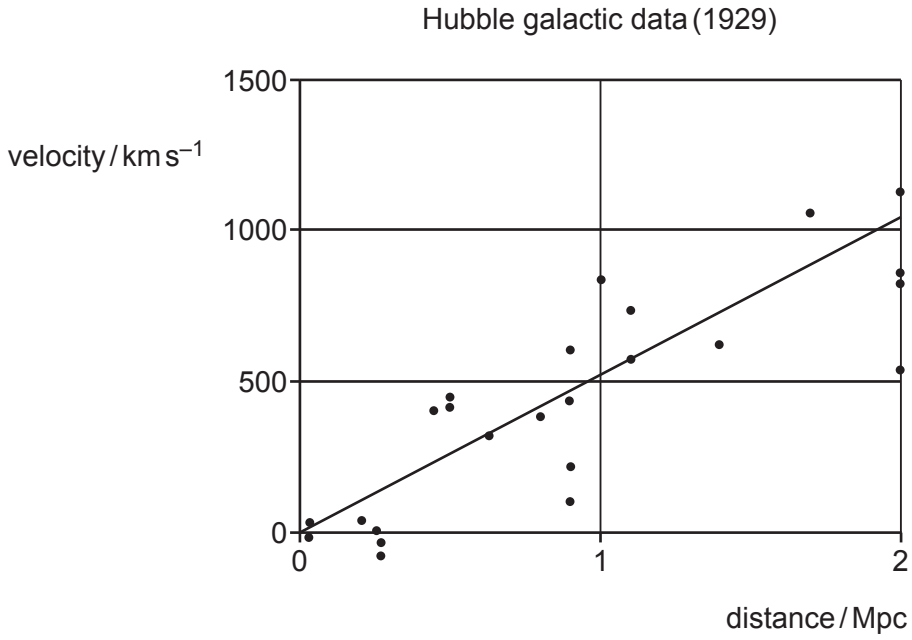

Fig. 33a

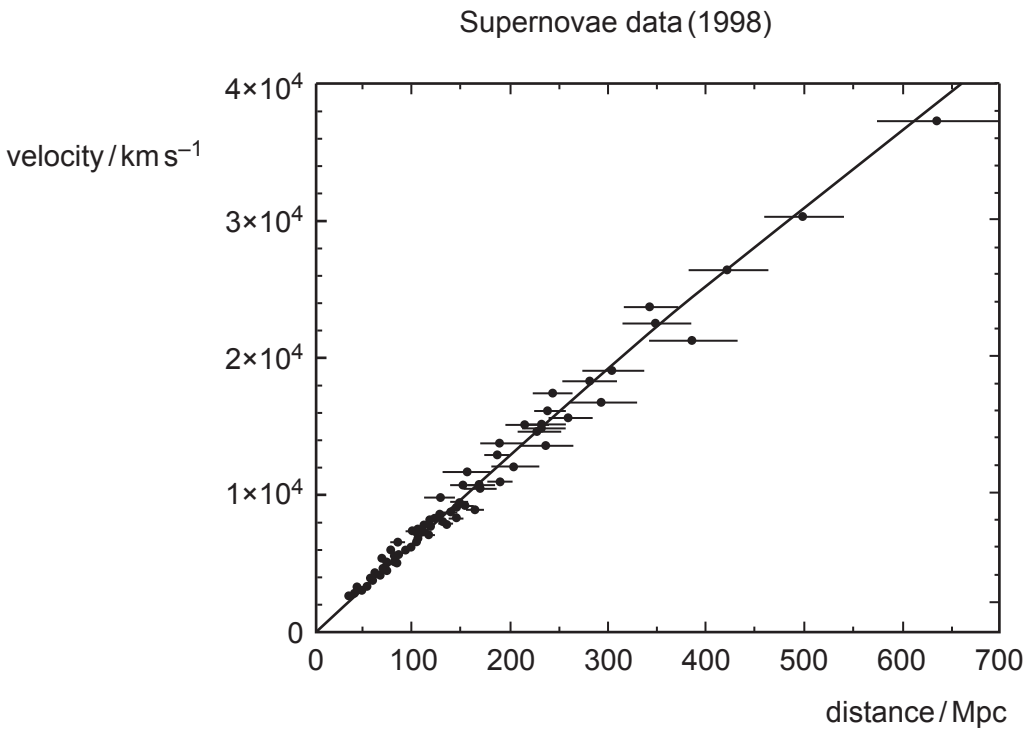

Fig. 33b

© OCR 2021

(a) Three of the nearer galaxies in **Fig. 33a** have a negative velocity.

Suggest and explain the effect this has on the wavelength shift for these galaxies.

.....

.....

..... **[2]**

(b) **(i)** Show from the lines of best fit that the best estimate for the Hubble constant H_0 was more than eight times (× 8) larger in 1929 than in 1998.

[2]

(ii) Show that the data from **Fig. 33b** indicate that the 'big bang' happened more than 10 billion years ago.

1 Mpc (megaparsec) = 3.1×10^{22} m

[2]

© OCR 2021

34 In radiotherapy, 'seeds' of radioactive material are implanted in tumours to eliminate cancer cells. Each seed contains a quantity of the isotope ^{125}I with half-life 60 days and initial activity 8.5 MBq.

(a) Show that the number of atoms of ^{125}I atoms initially present in one seed is about 6×10^{13}.

[2]

(b) The ^{125}I nucleus emits a γ-ray of energy 35 keV which will be absorbed by about 50 grams of surrounding tissue.

Show that in the first 60 days of irradiation by one implanted seed, the effective dose is about 4 Sv.

quality factor for this radiation = 1

[2]

(c) Seeds are implanted into cancer masses and remain there for many half-lives.

Suggest why implanting many seeds throughout a 50 gram cancer may be better than implanting one larger seed at its centre.

.....

.....

..... **[1]**

© OCR 2021

35 The graph shows how the Boltzmann factor f varies with temperature T for a process requiring activation energy E.

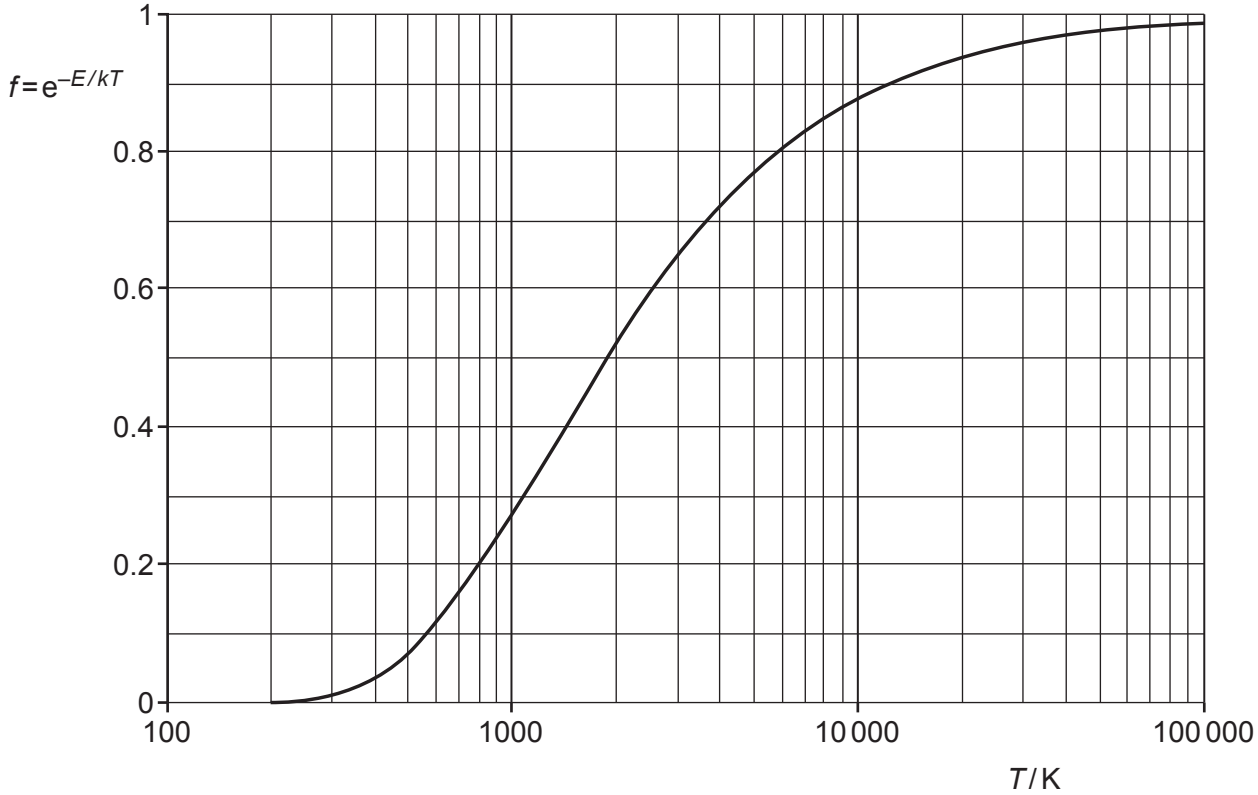

(a) Use the graph to estimate the temperature T when $E = kT$ for this process.

temperature T = ... K **[2]**

(b) Explain why the process completes at this temperature, but may occur at a significant rate at temperatures as low as $\frac{T}{20}$.

.....

.....

.....

..... **[2]**

© OCR 2021

SECTION C

Answer **all** the questions.

36 This question considers the internal resistance of chemical cells.

(a)* Explain how you would practically measure the internal resistance of a 1.5 V cell.

Include in your answer a circuit diagram of components with appropriate values, and your method of what readings to take and how to analyse them to find the internal resistance. **[6]**

.....

.....

.....

.....

.....

.....

.....

.....

.....

.....

.....

.....

.....

.....

.....

.....

© OCR 2021

(b) A lithium-ion rechargeable cell has an e.m.f. of 4.2 V.
The cell is rated at 9 Ah (Ampere × hours).

(i) Show that the unit Ah is a unit of charge.

[1]

(ii) The graph shows the potential difference of the cell against time as it completely discharges at a constant load current of 4.5 A.

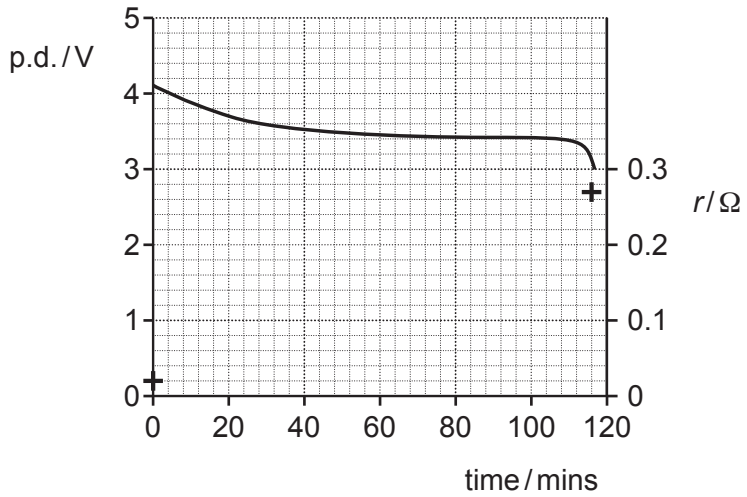

The internal resistance of the fully charged cell is 0.02 Ω. The internal resistance rises to 0.27 Ω when the cell is fully discharged.

The resistance scale is at the right side of the graph and the initial and final values are marked with ✚.

Add a curve to the graph which shows how the internal resistance changes with time.

Assume that any p.d. dropped by the cell is due to its internal resistance.

[2]

(iii) Estimate the number of moles of lithium Li^+ ions that are needed to store the amount of charge delivered by this cell.

one mole = 6.0×10^{23} ions

number of moles = ... **[2]**

© OCR 2021

37 **Fig. 37.1** shows trollies **A** and **B** set up on a friction compensated runway to investigate collisions.

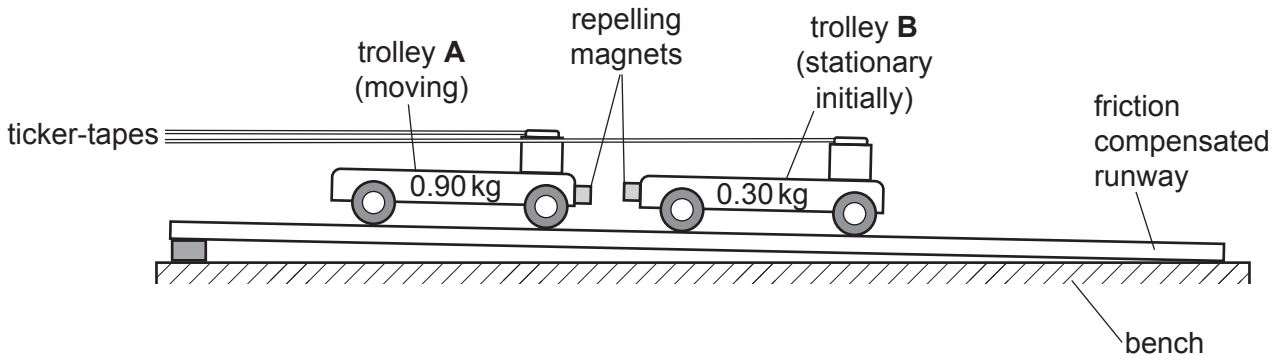

Fig. 37.1

(a) State what is meant by a friction compensated runway.

.....

.....

..... **[1]**

(b)* Trolley **A** has mass 0.90 kg and trolley **B** has mass 0.30 kg.
Trolley **A** travels down the runway at constant speed into the stationary trolley **B**.
Repelling magnets fixed to the trollies ensure they do not make physical contact.

Both trollies are attached to ticker-tapes onto which 50 dots per second are printed.
The ticker-tapes of the collision are shown in **Fig. 37.2**. The time between printed dots is 0.02 s.
The tapes have been divided into '5-tick strips' before and after the collision representing time intervals of 0.10 s.

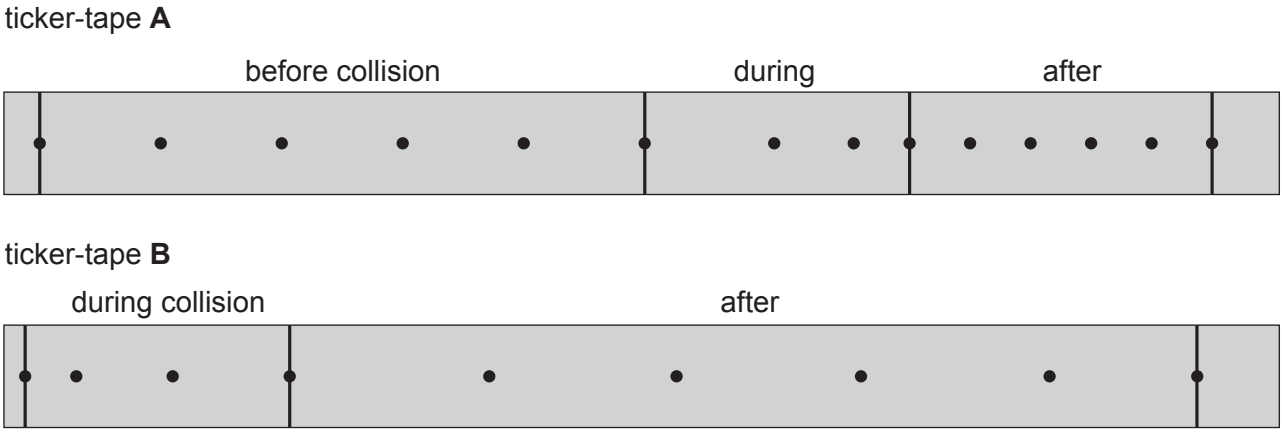

Fig. 37.2

Analyse the ticker-tapes to compare the motion of the two trollies. Include discussion of the conservation of momentum and kinetic energy and of the force on each trolley during the collision.
You may assume the collision impulse lasts for 0.060 s. The tape images are life-size. **[6]**

© OCR 2021

.....

.....

.....

.....

.....

.....

.....

.....

.....

.....

.....

.....

.....

.....

.....

.....

Additional answer space if required

.....

.....

.....

.....

.....

.....

© OCR 2021

(c) A high-pressure fire hose has a tapered nozzle as shown in **Fig. 37.3**.

The nozzle is reduced from diameter D_1 = 75 mm to diameter D_2 = 25 mm.
Water enters the nozzle at point **E** at velocity v_1 and leaves at point **F** with velocity v_2.

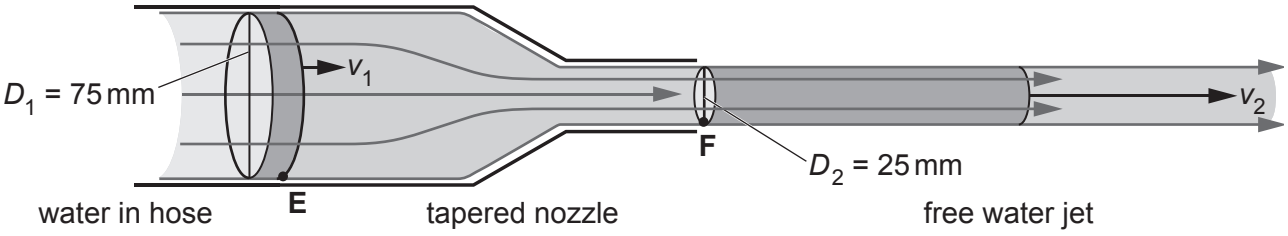

Fig. 37.3

(i) Explain why $v_2 = 9\ v_1$.

.....

.....

.....

..... **[2]**

(ii) The hose can deliver 0.020 $m^3 s^{-1}$ of water.

Calculate the velocity v_1 of water entering the nozzle.

v_1 = ... $m\,s^{-1}$ **[2]**

(iii) Show that the force on the nozzle is about 700 N.

Use 0.020 $m^3 s^{-1}$ is equivalent to 20 $kg\,s^{-1}$ for water

[2]

© OCR 2021

38 **(a)** This question is about the electric field strength E near to a proton leading to the Bohr model for the hydrogen atom.

(i) Show by calculation that E is about $1 \times 10^{12}\,\text{V m}^{-1}$ at distance $40 \times 10^{-12}\,\text{m}$ from the centre of the proton.

[2]

(ii) **Fig. 38.1** shows the electric field strength E near to a proton.

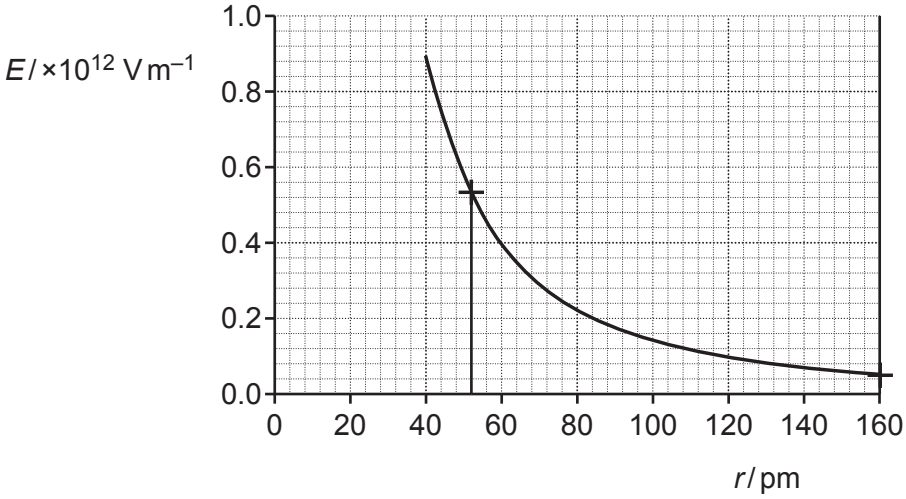

Fig. 38.1

Use any two points on the graph to show that the electric field strength E follows an inverse square law with distance r (a law of the form: $E \propto 1/r^2$).

[2]

(iii) State what the area under the graph between two r values represents and make an estimate of its value between the marked r values 52 and 160 pm.

Area represents .....

value of area = ... units ..... **[2]**

© OCR 2021

(b) In the Bohr model of the atom the electron travels at speed v in a circular orbit of radius r around the proton as shown in **Fig. 38.2**.

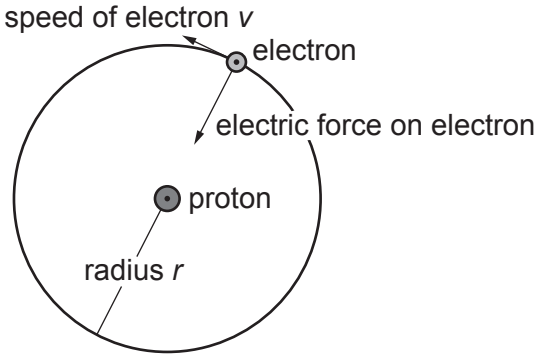

Fig. 38.2

(i) Show that the kinetic energy of the electron in orbit is $\frac{k\,e^2}{2r}$

where k is the electric force constant = $1/4\pi\varepsilon_o$.

[1]

(ii) **Fig. 38.3** shows the variation of kinetic energy and potential energy of the electron with the radius of its orbit r.

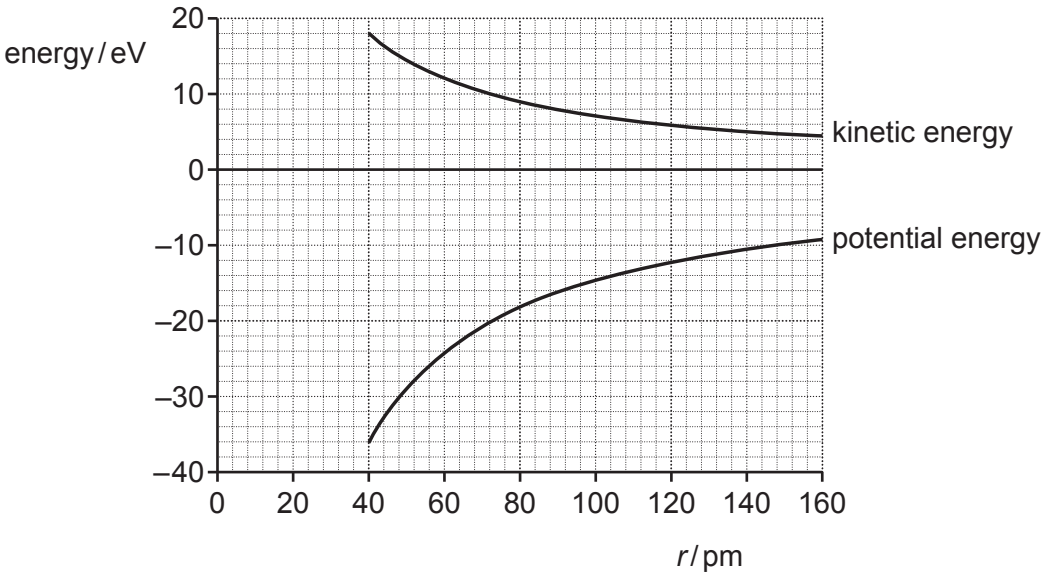

Fig. 38.3

© OCR 2021

The total energy of the electron in orbit is:

kinetic energy + potential energy ($E_{total} = E_{kinetic} + E_{potential}$).

Show that the total energy of the orbit = $\frac{-k\,e^2}{2r}$ and sketch the graph on **Fig. 38.3**.

[2]

(iii) Accelerating electrons emit electromagnetic radiation.

Suggest why Bohr had to introduce the quantisation principle of allowed energy levels into his model atom.

.....

.....

..... **[1]**

(iv) In Bohr's quantised model the radius of orbit for the ground state of the electron (lowest total energy) is given by the equation:

$r = \frac{\varepsilon_0 h^2}{\pi m e^2}$ where m and e are the mass and charge of the electron.

Show that the potential of an electron in the ground state is about –14 V.

[2]

© OCR 2021

39 This question is about a rotating field motor which has a permanent magnet rotor and a stator of three coils as shown in **Fig. 39.1a** and **b**.

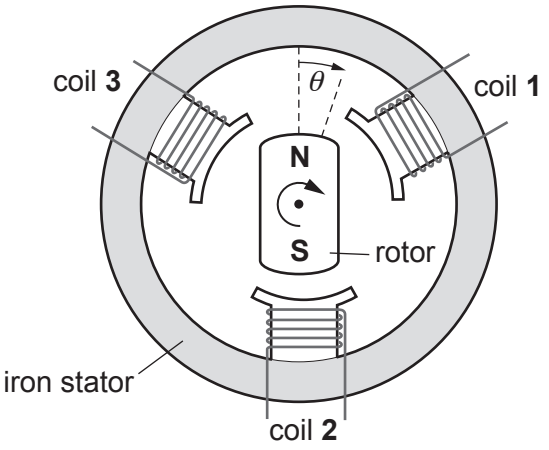

Fig. 39.1a

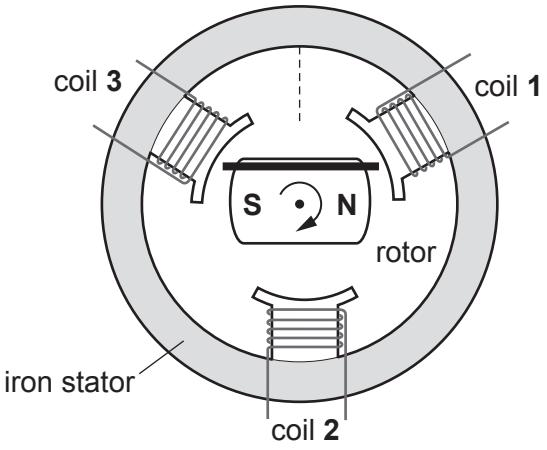

Fig. 39.1b

The control circuit switches the d.c. supply voltage to each coil between positive, off and negative. Only **two** of the **three** coils are switched on at any time.
A positive voltage makes the stator pole of that coil a **N** magnetic pole.
The angle of rotation of the magnet from the vertical start position is θ as shown in **Fig. 39.1a**.

(a) **(i)** Explain why the rotor will turn clockwise when coil **1** pole is a **S** and coil **2** pole is a **N** and coil **3** is off.

.....

..... **[1]**

(ii) In **Fig. 39.1b** the rotor has rotated 90° aligning between coils **3** and **1**. Coil **2** is off, coil **1** pole is a **S** and coil **3** pole is a **N**.

Complete the path of the **single** flux loop ▬▬▬ started inside the rotor. Show the flux direction.

[2]

© OCR 2021

(b) Explain each of the following design features of the motor:

1 The stator is made of iron.
2 The stator is laminated (made of layers of iron separated by thin layers of insulator).
3 The air gap between the rotor magnet and the coil poles is kept as small as possible.

1 .....

.....

2 .....

.....

3 .....

.....

[3]

(c) For this motor, suggest how to control each of the following.

1 The rate of rotation of the rotor.
2 The force that acts to turn the rotor.

1 .....

.....

2 .....

.....

[2]

© OCR 2021

40 This question is about deriving the universal ideal gas law.
For a gas at constant absolute temperature T and pressure P the density is constant. This tells us that the number of particles N is proportional to the volume V of the gas. $N \propto V$.

Fig. 40 shows graphical evidence obtained from experiments on air, varying the pressure P, volume V, and temperature θ, when **all** other variables except the ones plotted are kept constant.

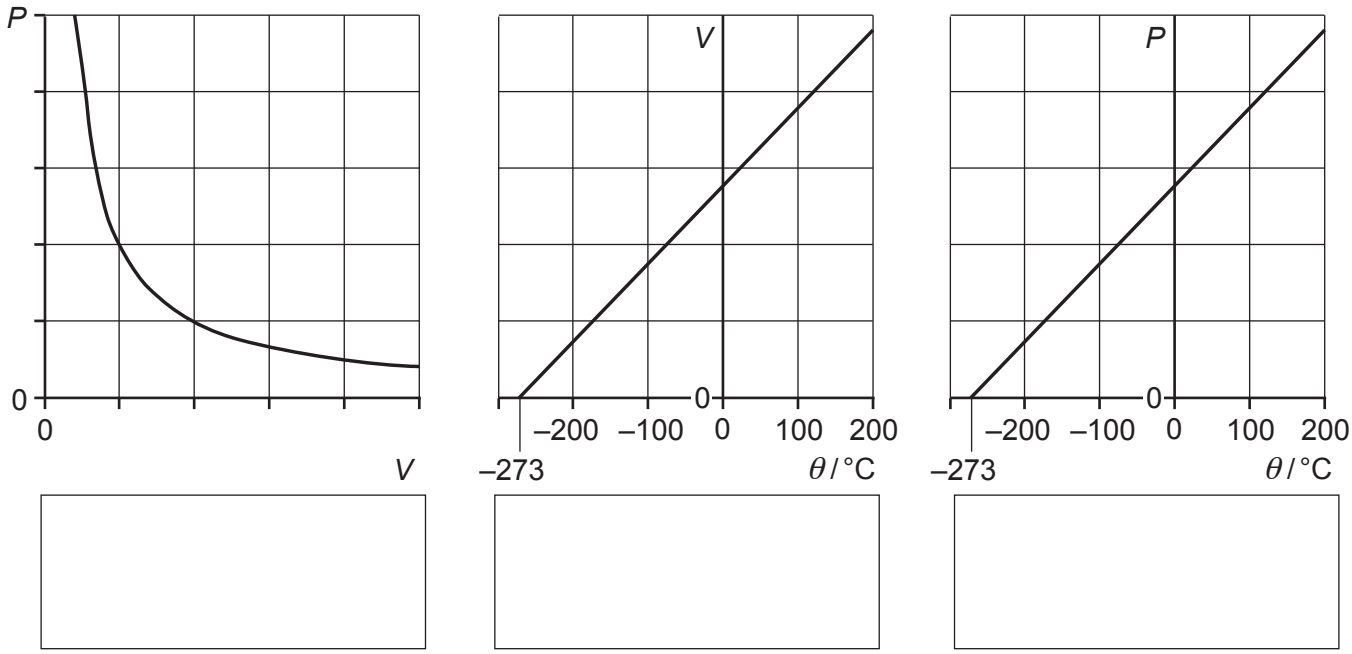

Fig. 40

(a) **(i)** Write in the box below each graph of **Fig. 40** the proportionality relationship shown. **[2]**

(ii) Combine all the proportionality relationships into one equation using the Boltzmann constant k.

[1]

(iii) For **one** mole of gas at standard temperature and pressure (STP):

$T = 273\,\text{K}$ $P = 101\,\text{kPa}$ $V = 22.4$ litres.

Calculate the value of the Boltzmann constant to **3** significant figures using this data.

Show your working to **4** significant figures.

Boltzmann constant = ... J K^{-1} **[1]**

© OCR 2021

(b) **(i)** Calculate the root mean square speed for helium gas at 300 K.

molar mass for helium = 4.0×10^{-3} kg

speed = ... $m\,s^{-1}$ **[2]**

(ii) A typical speed for an air molecule at 300 K is about $4 \times 10^{3}\,m\,s^{-1}$.

Explain why the scent from an air freshener may take several minutes to reach across a room of still air.

.....

.....

.....

..... **[2]**

© OCR 2021

41 This question is about neutron stability and the β-decay process.
This table shows the properties of the free particles that combine to form atoms.

Particle	Symbol	Mass / u	Half-life $t_{1/2}$ / s
electron	${}^{0}_{-1}e$	0.000549	stable ∞
proton	${}^{1}_{1}p$	1.007276	stable ∞
neutron	${}^{1}_{0}n$	1.008665	650

(a) **(i)** Calculate the maximum energy available when a free neutron decays into a proton and a β-particle.

1 u = 931 MeV

energy = ... MeV **[2]**

(ii) The β-particles from neutron decay have a spectrum of energies up to this maximum value as shown in **Fig. 41.1**.

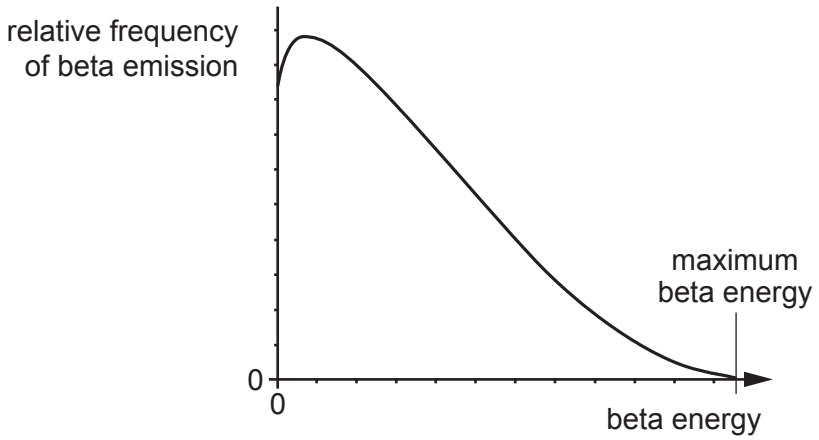

Fig. 41.1

State why the beta particles are emitted with a range of energies.

.....

..... **[1]**

© OCR 2021

(iii) Estimate the number of neutrons that would decay in one second from a sample of 10^4 free neutrons.

number per second = ... **[2]**

(iv) A down quark has electric charge of $-\frac{1}{3}e$ and an up quark has electric charge $+\frac{2}{3}e$.

State what is happening in terms of quarks during β-decay.

.....

..... **[1]**

(b) Neutrons bound in nuclei can be either stable or unstable, see **Fig. 41.2** showing the neutron number *N* against proton number *Z* for the light nuclei. All known β-emitters and stable nuclides are plotted within the range (including the free neutron). The line *N* = *Z* has been drawn as a guide.

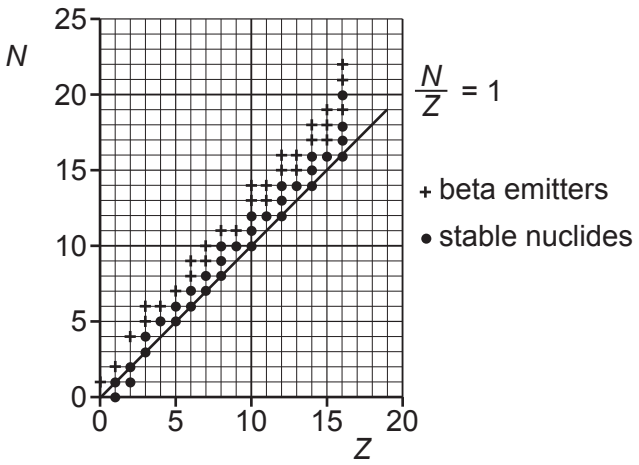

Fig. 41.2

State what this evidence broadly shows about the stability of neutrons in light nuclei.

.....

.....

..... **[1]**

END OF QUESTION PAPER

© OCR 2021

ADDITIONAL ANSWER SPACE

If additional space is required, you should use the following lined page(s). The question number(s) must be clearly shown in the margin(s).

OCR
Oxford Cambridge and RSA

Copyright Information

OCR is committed to seeking permission to reproduce all third-party content that it uses in its assessment materials. OCR has attempted to identify and contact all copyright holders whose work is used in this paper. To avoid the issue of disclosure of answer-related information to candidates, all copyright acknowledgements are reproduced in the OCR Copyright Acknowledgements Booklet. This is produced for each series of examinations and is freely available to download from our public website (www.ocr.org.uk) after the live examination series.

If OCR has unwittingly failed to correctly acknowledge or clear any third-party content in this assessment material, OCR will be happy to correct its mistake at the earliest possible opportunity.

For queries or further information please contact The OCR Copyright Team, The Triangle Building, Shaftesbury Road, Cambridge CB2 8EA.

OCR is part of the Cambridge Assessment Group; Cambridge Assessment is the brand name of University of Cambridge Local Examinations Syndicate (UCLES), which is itself a department of the University of Cambridge.

© OCR 2021