Oxford Cambridge and RSA

Thursday 15 October 2020 – Morning

A Level Physics B (Advancing Physics)

H557/02 Scientific literacy in physics

Time allowed: 2 hours 15 minutes

You must have:
- a clean copy of the Advance Notice Article (inside this document)
- the Data, Formulae and Relationships Booklet

You can use:
- a scientific or graphical calculator
- a ruler (cm/mm)

Please write clearly in black ink. **Do not write in the barcodes.**

Centre number | | | | | | Candidate number | | | | |

First name(s) _____

Last name *StemUp Model Solution*

INSTRUCTIONS
- Use black ink. You can use an HB pencil, but only for graphs and diagrams.
- Write your answer to each question in the space provided. If you need extra space use the lined pages at the end of this booklet. The question numbers must be clearly shown.
- Answer **all** the questions.
- Where appropriate, your answer should be supported with working. Marks might be given for using a correct method, even if your answer is wrong.

INFORMATION
- The total mark for this paper is **100**.
- The marks for each question are shown in brackets **[ ]**.
- Quality of extended response will be assessed in questions marked with an asterisk (*).
- This document has **28** pages.

ADVICE
- Read each question carefully before you start your answer.

© OCR 2020 [601/4745/3]
DC (ST/CGW) 193305/8
OCR is an exempt Charity

stemup.co.uk

SECTION A

Answer **all** the questions.

1 A student connects the circuit shown in **Fig. 1.1**.

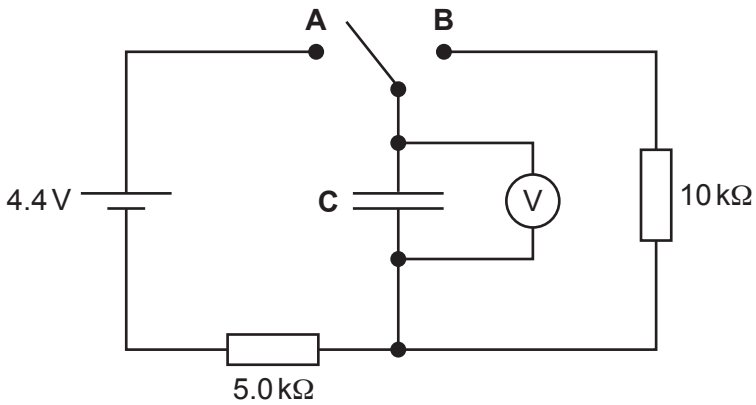

Fig. 1.1

The student uses a data logger to take readings of p.d. over time when the switch is put in position **A**. She obtains the results displayed in **Fig. 1.2**.

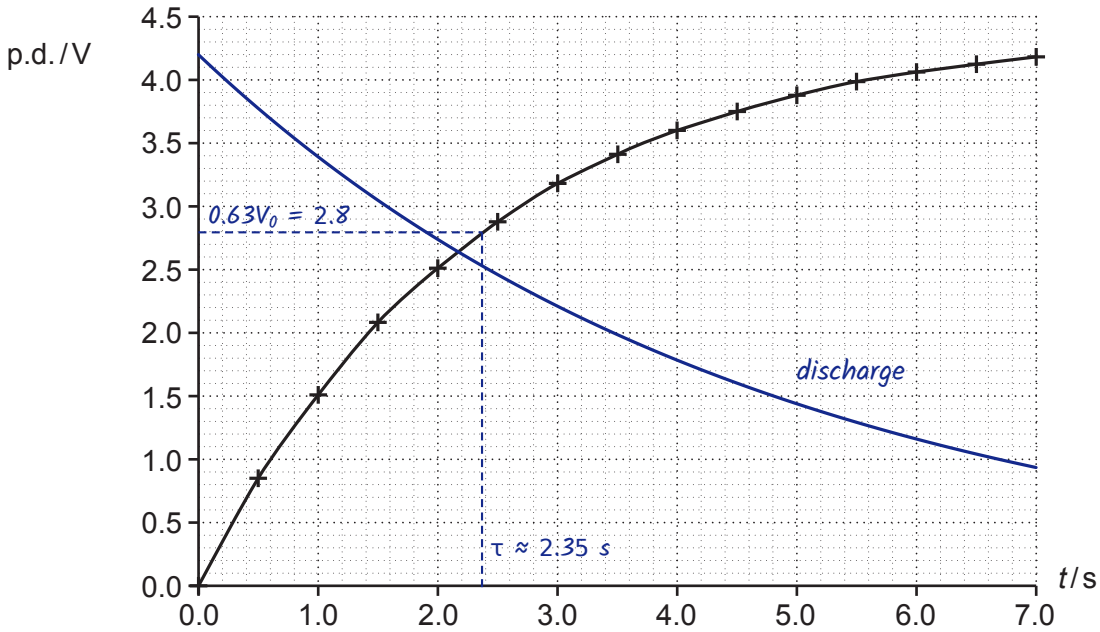

Fig. 1.2

(a) **(i)** Suggest why the student chooses to use a data logger rather than a digital meter.

The p.d. changes quickly, so the data logger can take many readings at a high frequency with precise timing; reading a changing meter by eye with a stopwatch would give greater uncertainty. **[1]**

© OCR 2020

(ii) Use data from the graph to show that the capacitance of **C** is about 500 μF.

V_0 = 4.4 V. After one time constant τ = RC, V = 0.63V_0

0.63 × 4.4 = 2.8 V, and from the graph V = 2.8 V at t ≈ 2.35 s

so τ = RC = 2.35 s

C = τ / R = 2.35 / 5.0 × 10^3 = 4.7 × 10^{-4} F

C = 470 μF ≈ 500 μF

[3]

(iii) Calculate the energy stored in the capacitor when the p.d. across it is 4.2 V (at t = 7.0 s).

$E = ½CV^2 = 0.5 \times 4.7 \times 10^{-4} \times 4.2^2$

energy = 4.1 × 10^{-3} J **[2]**

(b) **(i)** When the capacitor is charged to 4.2 V, the student resets the data logger to t = 0.0 s and moves the switch from position **A** to position **B**.

Draw a line on **Fig. 1.2** to show how the p.d. across the capacitor will change from t = 0.0 s to t = 7.0 s. Explain your reasoning.

Discharge is through the 10 kΩ resistor only, so the p.d. falls exponentially from 4.2 V ($V = V_0e^{-t/RC}$).

RC = 10 kΩ × 470 μF = 4.7 s, twice the time constant for charging (2.35 s), so the p.d. falls more slowly; the gradient is about half that of the charging curve. **[3]**

(ii) Calculate the time from the beginning of the discharge for the energy stored on the capacitor to fall to half its value.

$E = ½CV^2$, so $E \propto V^2$: when E halves, V = 4.2 × √0.5 = 2.97 V

$V = V_0e^{-t/RC}$ with RC = 10 × 10^3 × 4.7 × 10^{-4} = 4.7 s

t = −RC ln(V / V_0) = −4.7 × ln(2.97 / 4.2)

t = 4.7 × 0.347 = 1.63 s

time = 1.6 s **[3]**

© OCR 2020

stemup.co.uk

2 Albert Einstein published his theory of Special Relativity in 1905. Central to the theory is the statement that the speed of light is constant for all observers.

A passenger on a train is holding a 'light clock'. This is a pair of mirrors with a pulse of light bouncing between them as shown in **Fig. 2.1**. The distance between the mirrors can be measured in 'light seconds', the distance covered by light in one second.

In **Fig. 2.1**, this distance $d = c\tau$ where c is the velocity of light and τ is the time taken for the pulse to travel from the bottom mirror to the top mirror, as measured by the passenger holding the light clock.

One 'tick' of the light clock is the time for the pulse to travel to the top mirror and back (2τ).

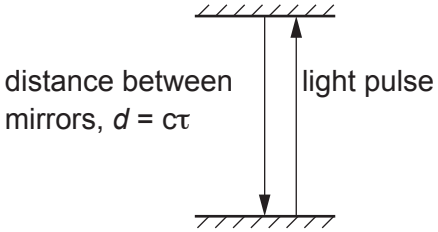

Light beam observed by the passenger on the train.

Fig. 2.1

(a) The mirrors are a distance of 0.80 m apart. Calculate this distance in light seconds.

distance in light seconds = 0.80 / 3.0 × 10^8

distance = 2.7 × 10^{-9} light seconds

[1]

© OCR 2020

(b) The train moves at constant velocity v relative to an observer on the platform. The observer sees the light pulse take the path shown in **Fig. 2.2**.

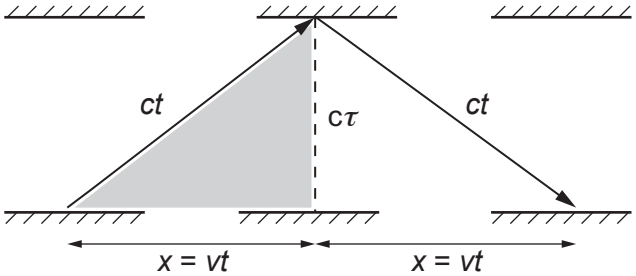

Light pulse seen by the observer on the platform.

Fig. 2.2

(i) Explain why the 'ticks' will be further apart for the observer on the platform than for the passenger on the train.

For the observer on the platform the light pulse travels a greater (diagonal) distance between ticks: $2ct > 2c\tau$. Light travels at the same speed c for both observers, so the time between ticks, $2t$, is longer than 2τ. **[2]**

(ii) Use Pythagoras's theorem to show that, for the shaded triangle in **Fig. 2.2**, $t = \dfrac{\tau}{\sqrt{1 - \dfrac{v^2}{c^2}}}$.

Pythagoras for the shaded triangle: $(ct)^2 = (vt)^2 + (c\tau)^2$

$c^2t^2 - v^2t^2 = c^2\tau^2$

divide by c^2: $t^2(1 - v^2/c^2) = \tau^2$

so $t = \tau / \sqrt{(1 - v^2/c^2)}$

[2]

© OCR 2020

stemup.co.uk

(c) Slow neutrons outside the nucleus have a half-life of 611 s. 'Fast' neutrons released in a fission reactor typically have speeds of up to $5.4 \times 10^7\,\mathrm{m\,s^{-1}}$. Calculate the half-life of a neutron travelling at $5.4 \times 10^7\,\mathrm{m\,s^{-1}}$ as measured by a stationary observer.

$\gamma = 1 / \sqrt{(1 - v^2/c^2)} = 1 / \sqrt{(1 - (5.4 \times 10^7)^2 / (3.0 \times 10^8)^2)}$

$\gamma = 1 / \sqrt{(1 - 0.0324)} = 1.017$

$t = \gamma\tau = 1.017 \times 611$

half-life = ..621..... s **[2]**

(d) It has been said that, 'from the point of view of a photon, it takes no time to cross the Universe'. Use the equation in **(b)(ii)** to explain this statement.

For a photon $v = c$, so $v^2/c^2 = 1$ and $\sqrt{(1 - v^2/c^2)} = 0$: the gamma factor is infinite.

Then $\tau = t\sqrt{(1 - v^2/c^2)} = t / \gamma = 0$ for any time t that we measure, so in the photon's own time it takes no time to cross the Universe. **[2]**

© OCR 2020

BLANK PAGE

PLEASE DO NOT WRITE ON THIS PAGE

Question 3 starts on page 8

© OCR 2020

stemup.co.uk

3 An electron in a hydrogen atom moves from the $n = 3$ to the $n = 2$ energy level as represented in **Fig. 3.1**.

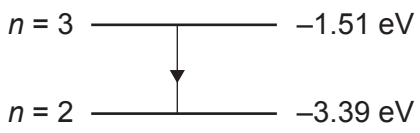

Fig. 3.1

(a) Calculate the wavelength of the light released by the electron.

$\Delta E = -1.51 - (-3.39) = 1.88\ eV = 1.88 \times 1.60 \times 10^{-19} = 3.01 \times 10^{-19}\ J$

$\lambda = hc / \Delta E = (6.63 \times 10^{-34} \times 3.00 \times 10^{8}) / 3.01 \times 10^{-19}$

wavelength = ..6.61×10^{-7}..... m **[2]**

(b) The 'striking potential' of a light emitting diode (LED) is the potential difference across the diode when it just begins to glow. The energy transferred to an electron crossing this potential difference is equal to the energy of the photon released.

In an experiment to determine a value for the Planck constant, a student increases the potential difference across an LED and records the value when the LED just begins to glow. She repeats this for LEDs emitting different wavelengths and plots a graph of striking potential against $\frac{1}{\lambda}$ as shown in **Fig. 3.2**. She included uncertainty in the potential difference readings. She used the manufacturer's data for the wavelength of light emitted.

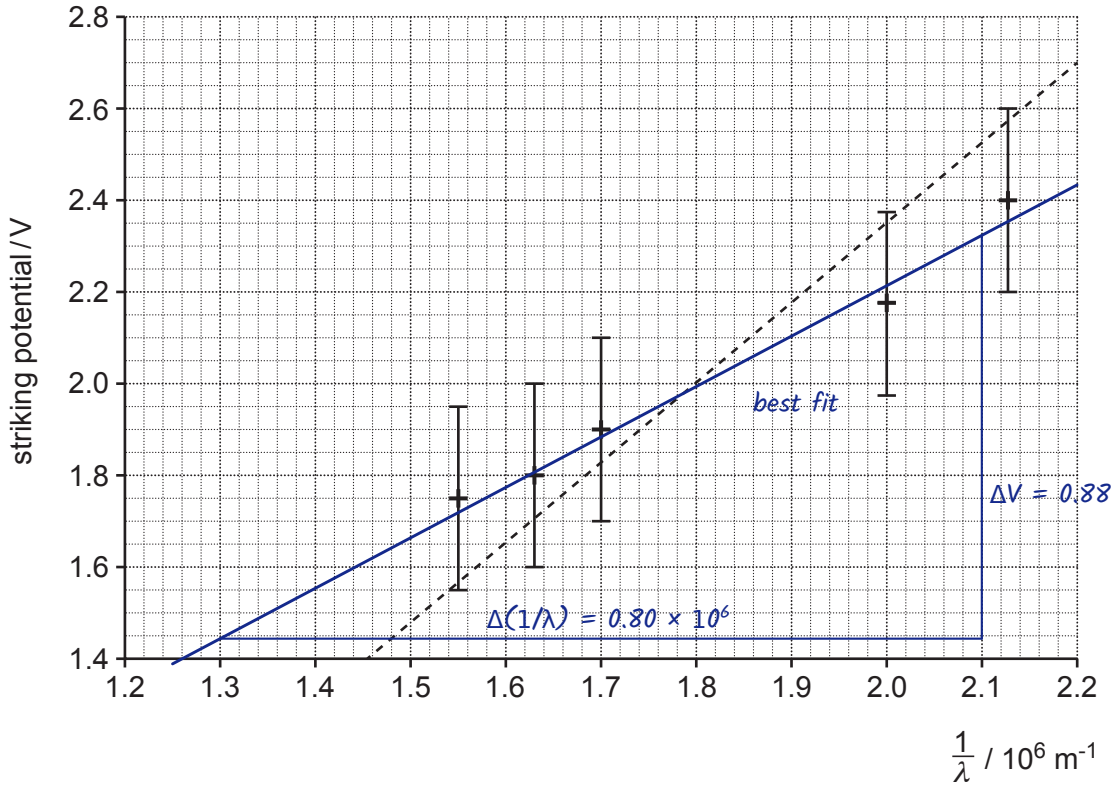

Fig. 3.2

© OCR 2020

(i) A 'steepest-possible' line has been drawn. Add a best-fit line to the graph.

[1]

(ii) Show that the Planck constant is related to the gradient of the graph by the equation $h = gradient \times \frac{e}{c}$ where e is the charge on an electron and c is the velocity of light.

photon energy $E = hf = hc / \lambda$, and $E = eV$

so $eV = hc \times (1/\lambda)$, giving $V = (hc / e) \times (1/\lambda)$

gradient $= \Delta V / \Delta(1/\lambda) = \Delta V \times \Delta\lambda = hc / e$

so h = gradient $\times\ e / c$

[2]

(iii) Find a value of the Planck constant from your best-fit line on **Fig. 3.2**. Show all your working.

From my best-fit line: $1/\lambda = 1.30 \times 10^{6}\ m^{-1}$, $V = 1.46\ V$

and $1/\lambda = 2.10 \times 10^{6}\ m^{-1}$, $V = 2.34\ V$

gradient $= (2.34 - 1.46) / (2.10 - 1.30) \times 10^{6} = 0.88 / 0.80 \times 10^{6}$

gradient $= 1.1 \times 10^{-6}\ V\ m$

$h = 1.1 \times 10^{-6} \times 1.60 \times 10^{-19} / 3.00 \times 10^{8} = 5.87 \times 10^{-34}\ J\ s$

Planck constant = 5.9×10^{-34} J s **[3]**

(iv) The gradient of the 'steepest-possible' line is 1.74×10^{-6} V m. Use this to calculate an estimate of the uncertainty of the value for the Planck constant in **(b)(iii)**. State your value of the Planck constant together with its uncertainty.

h (steepest) $= 1.74 \times 10^{-6} \times 1.60 \times 10^{-19} / 3.00 \times 10^{8} = 9.3 \times 10^{-34}\ J\ s$

uncertainty $= 9.3 \times 10^{-34} - 5.9 \times 10^{-34} = 3.4 \times 10^{-34}\ J\ s$

Planck constant = 5.9×10^{-34} ± 3.4×10^{-34} J s **[3]**

© OCR 2020

stemup.co.uk

BLANK PAGE

PLEASE DO NOT WRITE ON THIS PAGE

Question 4 starts on page 11

© OCR 2020

SECTION B

Answer **all** the questions.

4 This question is about imaging using a simple mobile phone camera.

(a) The lens system of the camera acts like a single lens of focal length 3.85 mm. Calculate the curvature added to waves when they pass through the lens.

curvature added = 1 / f = 1 / 3.85 × 10^{-3} m

curvature added to waves = (+) 260 D **[1]**

(b) Use ideas about curvature of waves to explain why the lens cannot form an image of an object closer than or equal to 3.85 mm from the lens.

Waves from an object 3.85 mm or closer reach the lens with a curvature of −260 D or more negative (1/u = −1/3.85 × 10^{-3}). The lens adds only +260 D, so the curvature on leaving is still negative or zero: the waves diverge (or are plane) and never converge to form an image. **[2]**

(c) The light-sensitive surface in the camera is fixed 3.85 mm behind the lens. The image recorded on this surface will be clear if the true position of the image is within ± 0.1 mm of the surface.

Explain, with calculations, why the image on the light-sensitive surface will be clear if the object is 1.2 m from the lens, but the image of an object 0.05 m from the lens will not be clear.

1/v = 1/u + 1/f, with 1/f = 1 / 3.85 × 10^{-3} = 259.7 D (u negative)

u = 1.2 m: 1/v = 259.7 − 1/1.2 = 258.9 D, so v = 3.86 × 10^{-3} m = 3.86 mm

3.86 − 3.85 = 0.01 mm, which is within ± 0.1 mm, so the image is clear.

u = 0.050 m: 1/v = 259.7 − 1/0.050 = 239.7 D, so v = 4.17 × 10^{-3} m

4.17 − 3.85 = 0.32 mm, more than 0.1 mm behind the surface, so the image is formed far from the surface and is not clear (blurred).

[3]

© OCR 2020

stemup.co.uk

(d) The camera is used to form an image of a resin chess piece **Fig. 4 a**. The chess piece is 0.090 m long. It is 0.35 m from the lens.

Image recorded by camera
Fig. 4 a

Processed image
Fig. 4 b

Calculate the length of the image of the chess piece on the light-sensitive surface.

magnification = v / u = 3.85×10^{-3} / 0.35 = 0.011

image length = 0.011 × 0.090

length of image = ..9.9×10^{-4}..... m **[2]**

(e) There are 12×10^6 square pixels on the rectangular light-sensitive surface.
The dimensions of the surface are 4.89 mm × 3.65 mm.

Use these data and your answer from **(d)** to calculate the resolution of the image.

area of one pixel = $(4.89 \times 10^{-3} \times 3.65 \times 10^{-3}) / 12 \times 10^6 = 1.49 \times 10^{-12}$ m^2

length of side of a pixel = $\sqrt{(1.49 \times 10^{-12})} = 1.2 \times 10^{-6}$ m

number of pixels along the image = $9.9 \times 10^{-4} / 1.2 \times 10^{-6} = 825$

resolution = 0.090 m / 825 pixels

= 1.1×10^{-4} m per pixel

resolution of image = ..1.1×10^{-4}..... m **[4]**

© OCR 2020

(f) The image in **Fig. 4 b** has been processed. Identify a change that has been made in the image and explain how the data producing the image has been altered. Explain why quick and easy image processing using smartphones can be both a benefit and a problem for society.

The brightness has been increased: the processed image is lighter overall (the contrast is also greater).

To do this the same fixed value is added to the value of every pixel (until the brightest pixel is coded at 255). For contrast, the pixel values are stretched to cover the full range 0 to 255.

Benefit: anyone can quickly improve images, e.g. remove noise, sharpen detail or make aesthetic changes.

Problem: pictures can easily be manipulated or faked (e.g. fake news or unrealistic body images), so images can no longer be trusted.

[4]

© OCR 2020

stemup.co.uk

5 A student uses the apparatus shown in **Fig. 5.1** to investigate 'bungee jumping', a sport where players drop from a high point such as a bridge while attached to a long elastic cord which stretches just enough to stop them hitting the ground.

The student measures the maximum extension of the cord when the tennis ball is dropped from the position shown.

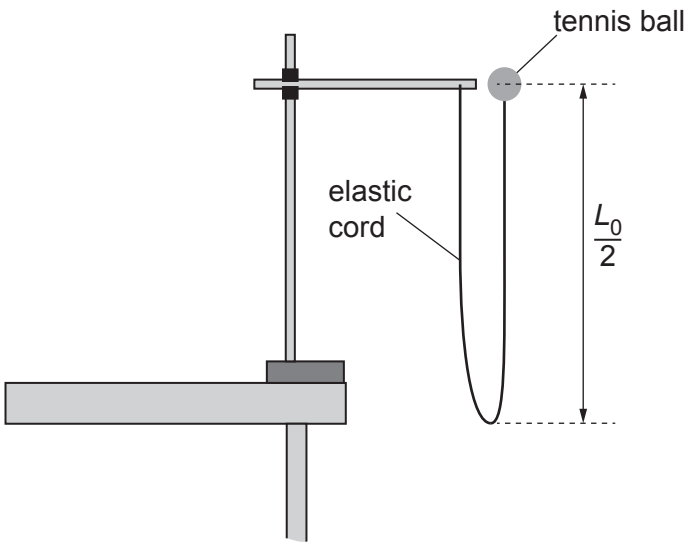

Fig. 5.1

Data:

Unstretched length of elastic cord L_0 = 1.15 m

Mass of tennis ball = 0.059 kg

The mass of the cord and the effects of air resistance are assumed to be negligible.

(a) **(i)** The cord stretches to a length L_1 = 1.31 m when the tennis ball hangs from it. Show that the force constant of the cord is about 3.7 N m^{-1}.

$k = F / x = mg / x = (0.059 \times 9.81) / (1.31 - 1.15) = 0.579 / 0.16$

$k = 3.62\ N\ m^{-1} \approx 3.7\ N\ m^{-1}$

[1]

(ii) Calculate the energy stored in the cord at this length.

$x = 1.31 - 1.15 = 0.16\ m$

$E = ½kx^2 = 0.5 \times 3.62 \times 0.16^2$

energy stored = ..0.046..... J **[2]**

© OCR 2020

(iii)* The student releases the ball from the position shown in **Fig. 5.1**. It first stops when the length of the cord is stretched to L_2 = 1.78 m.

Using ideas about the forces acting on the ball, describe **and** explain the changes in velocity and acceleration of the ball as it falls from the moment it is released to the moment the cord is at length L_2. State the length of the cord when the ball reaches maximum velocity and calculate a value for the maximum upwards acceleration. **[6]**

From release until the cord reaches its unstretched length of 1.15 m the cord is slack, so the only force on the ball is its weight mg: the acceleration is constant at 9.81 m s^{-2} downwards and the velocity increases uniformly.

From 1.15 m to 1.31 m the cord stretches and pulls upwards with a tension kx that increases with extension. The resultant force mg − kx is still downwards but decreasing, so the acceleration decreases and the velocity increases at a decreasing rate.

At 1.31 m, kx = mg, so the resultant force and acceleration are zero: the velocity is a maximum when the cord length is 1.31 m.

From 1.31 m to 1.78 m, kx > mg and the upward resultant force increases as x increases, so the ball decelerates at an increasing rate until it stops at 1.78 m.

The maximum upwards acceleration is at the lowest point, where x = 1.78 − 1.15 = 0.63 m:

Additional answer space if required

a = (kx − mg) / m = (3.62 × 0.63 − 0.059 × 9.81) / 0.059

a = (2.28 − 0.579) / 0.059 = 28.8 m s^{-2} upwards

© OCR 2020

stemup.co.uk

(iv) Suggest and explain how the student could reliably measure, to the nearest centimetre, the maximum extension of the cord at the instant the tennis ball stops descending.

Film the ball against a vertical metre rule fixed right next to the cord, using a high frame rate (slow motion) camera. Step through the video frame by frame to find the frame where the ball is lowest and read its position on the rule (camera level with the lowest point to avoid parallax); repeat and average. **[2]**

(b) In the sport of bungee jumping, the jumper is tied to a long bungee rope and leaps from a high point. The bungee rope stretches until the jumper stops falling and is pulled upwards. Bungee ropes are made of polymers which can extend elastically to far higher strains than metal cables. Use the microscopic structure of polymers and metals to explain this difference in behaviour and why such polymer-based ropes are suitable for bungee-jumping cords. You may include diagrams in your explanation.

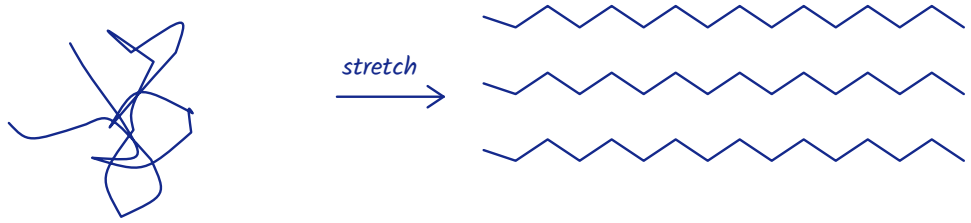

unstretched: tangled chains

stretched: chains untangle

A polymer is made of long chain molecules, tangled with a few cross-links. When stretched the chains rotate about their bonds and untangle, so very large elastic strains are possible. The covalent bonds along the chains are strong, so the rope has a high breaking stress.

A metal is an array of positive ions in a sea of delocalised electrons. It is elastic only for small strains, as the force pulls the bonds apart; then mobile dislocations move and it deforms plastically. The polymer has a low k, so the decelerating force on the jumper is small; for a metal cable (much higher k) it would be very great. **[4]**

© OCR 2020

BLANK PAGE

PLEASE DO NOT WRITE ON THIS PAGE

Question 6 starts on page 18

© OCR 2020

stemup.co.uk

6 The satellite NOAA-20 was launched in November 2017. The satellite has an approximately circular orbit at an altitude of 825 km above the Earth's surface. The radius of the Earth = 6.4×10^6 m.

Fig. 6.1 shows how the gravitational field strength g of the Earth varies with distance r from the centre of the Earth.

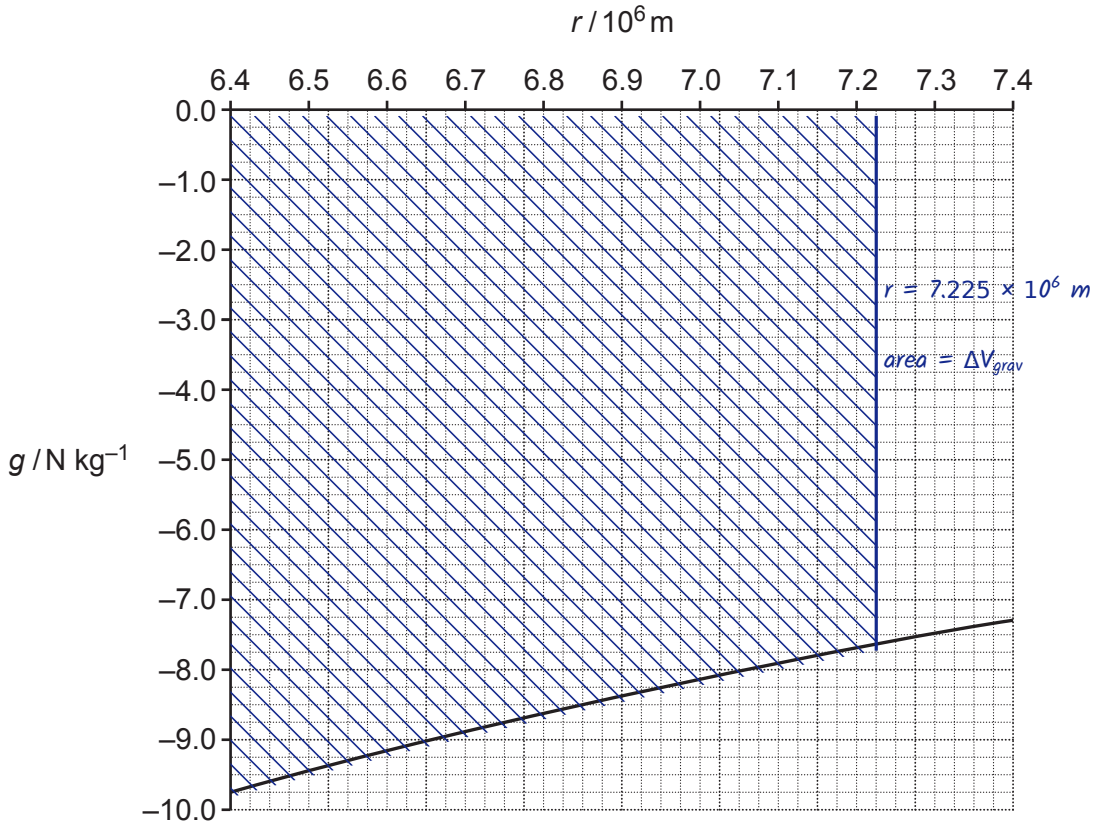

Fig. 6.1

(a) **(i)** The mass of the satellite is 2300 kg. Use the graph to show that the change in gravitational potential energy of the satellite between its launch and its position in orbit is about 1.6×10^{10} J. Explain your method.

launch $r = 6.40 \times 10^6$ m; orbit $r = 6.40 \times 10^6 + 0.825 \times 10^6 = 7.225 \times 10^6$ m

Change in V_{grav} = area between the line and the r axis from 6.40 to

7.225×10^6 m (shaded). As a trapezium ($g = -9.75$ to -7.65 N kg^{-1}):

area = ½ × (9.75 + 7.65) × $0.825 \times 10^6 = 7.18 \times 10^6$ J kg^{-1}

$\Delta E_p = m\,\Delta V_{grav} = 2300 \times 7.18 \times 10^6 = 1.65 \times 10^{10}$ J ≈ 1.6×10^{10} J

[3]

© OCR 2020

(ii) Use the value for the change in potential energy from **(a)(i)** to show that the mass of the Earth is about 6×10^{24} kg.

$\Delta E_p = GMm(1/r_1 - 1/r_2)$

$1.6 \times 10^{10} = GMm(1/6.4 \times 10^6 - 1/7.225 \times 10^6) = 1.78 \times 10^{-8}\ GMm$

$M = 1.6 \times 10^{10} / (6.67 \times 10^{-11} \times 2300 \times 1.78 \times 10^{-8})$

$M = 5.8 \times 10^{24}\ kg \approx 6 \times 10^{24}\ kg$

[3]

(b) **(i)** Calculate the force on the satellite when orbiting at a height of 825 km above the Earth's surface.

$F = GMm / r^2 = (6.67 \times 10^{-11} \times 6 \times 10^{24} \times 2300) / (7.225 \times 10^6)^2$

force = 1.8×10^4 N **[2]**

(ii) Calculate the time taken for one orbit of the satellite.

$F = mv^2 / r$, so $v = \sqrt{(Fr / m)}$

$v = \sqrt{(1.8 \times 10^4 \times 7.225 \times 10^6 / 2300)} = 7520\ m\ s^{-1}$

$T = 2\pi r / v = 2\pi \times 7.225 \times 10^6 / 7520$

$T = 6037\ s$

time = 6040 s **[3]**

© OCR 2020

stemup.co.uk

(c) The satellite takes a polar orbit, revolving around the Earth from pole to pole, as shown in **Fig. 6.2**.
Geostationary satellites orbit at a greater distance from the Earth and remain above the same point on the surface at all times.

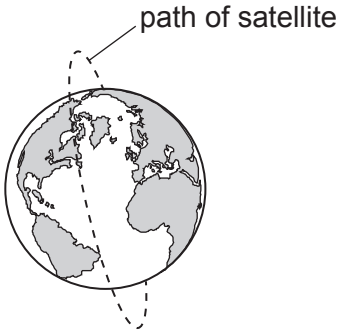

Fig. 6.2

Explain why a low, polar orbit is useful for satellites used for weather forecasting and suggest why geostationary satellites are used for telecommunications.

A low orbit is close to the surface, so the satellite gives higher resolution images of the weather (clouds, storms).

In a polar orbit the Earth spins underneath the satellite, so on successive orbits it passes over different strips and can image every part of the planet.

A geostationary satellite stays at the same position in the sky, so fixed ground dishes stay locked on to its signal without tracking.

Its higher orbit also means each satellite covers a much greater area of the Earth.

..... **[3]**

© OCR 2020

BLANK PAGE

PLEASE DO NOT WRITE ON THIS PAGE

Question 7 starts on page 22

© OCR 2020

stemup.co.uk

SECTION C

Answer **all** the questions.

This section is based on the Advance Notice Article, which is an insert.

7 This question is about some of the physics of the flute (lines 8–42).

Fig. 7.1 represents the waveform of a note played on a flute-like instrument which acts as an open pipe. The waveform is a superposition of the first harmonic (fundamental) and the second harmonic.

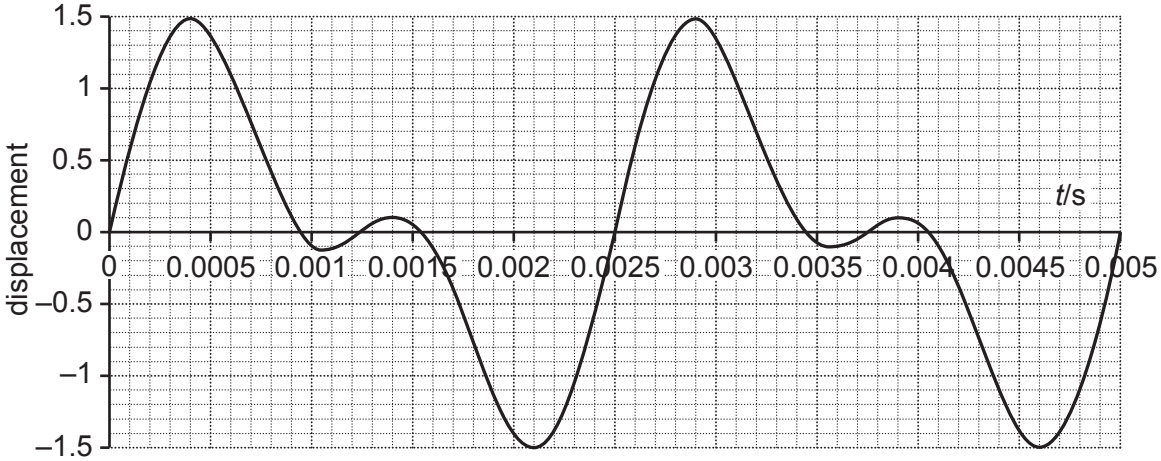

Fig. 7.1

(a) Use the graph to find the frequency of the first harmonic.

period T = 0.0025 s, f = 1 / T = 1 / 0.0025

frequency = ..400..... Hz **[1]**

(b) State the minimum sampling frequency required to accurately digitise the waveform. Explain your answer.

minimum sampling frequency = ..1600..... Hz

Explanation:

The highest frequency component is the second harmonic, 2 × 400 = 800 Hz.

The sampling rate must be at least twice the highest frequency to avoid aliasing, so 2 × 800 = 1600 Hz.

..... **[3]**

© OCR 2020

(c) The velocity of sound in air is proportional to the square root of the kelvin (absolute) temperature.

(i) State why the note produced by a flute will increase in frequency when the temperature of the air in the flute rises.

The speed of sound increases while the wavelength stays constant (fixed by the tube length), so $f = v / \lambda$ increases. **[1]**

(ii) A flute sounds a note frequency 440 Hz when the temperature of the air in the tube is 285 K. Calculate the temperature rise needed for the same length tube to produce a note of frequency 445 Hz.

$f \propto v \propto \sqrt{T}$, so $445 / 440 = \sqrt{(T_2 / 285)}$

$T_2 = 285 \times (445 / 440)^2 = 291.5$ K; rise $= 291.5 - 285$

temperature rise = 6.5 K **[2]**

© OCR 2020

stemup.co.uk

8 This question is about radiocarbon dating (lines 44–61).

(a) Carbon-14 decays by beta emission. Identify the particle **X** in the equation below and state how it ensures that lepton number and mass-energy is conserved in the decay.

$$^{14}_{6}C \rightarrow {}^{14}_{7}N + {}^{0}_{-1}e + {}^{0}_{0}X$$

X is an (electron) antineutrino.

There are no leptons on the left (lepton number 0). The electron has lepton number +1 and the antineutrino, an anti-lepton, has −1, so the total on the right is also 0.

Electrons from beta decay have a range of energies; the antineutrino carries the rest of the energy released, so mass-energy is conserved. **[3]**

(b) Radiocarbon dating uses a value for the half-life of $^{14}C = 5.70 \times 10^{3}$ years.

The $^{14}C/^{12}C$ ratio in living material is about 1.4×10^{-12}.

Calculate the $^{14}C/^{12}C$ ratio from a sample of carbon taken from a 9000-year-old specimen, such as the ancient Chinese flute.

$\lambda = \ln 2 / 5700 = 1.216 \times 10^{-4}$ year^{-1}

ratio $= 1.4 \times 10^{-12} \times \exp(-1.216 \times 10^{-4} \times 9000)$

$= 1.4 \times 10^{-12} \times 0.335$

ratio = 4.7×10^{-13} **[2]**

© OCR 2020

(c)* Explain why living plants growing near active volcanoes may have radiocarbon ages that suggest they have been dead for hundreds of years. Include a calculation to illustrate your reasoning, for example by calculating the effect of including 10% 'ancient carbon' with a vanishingly small $^{14}C/^{12}C$ ratio in a sample of living material. Explain how such effect of ancient carbon on dating samples can be taken into account if living trees are found in the same area as the sample to be dated. **[6]**

10% ancient carbon: ratio = $0.90 \times 1.4 \times 10^{-12} = 1.26 \times 10^{-12}$

apparent age $t = -(5700 / \ln 2) \times \ln(1.26 / 1.4)$

$t = -8223 \times (-0.105) = 866$ years ≈ 870 years

Carbon released by volcanoes is ancient; it has been locked in rock for so long that all its carbon-14 has decayed, so its $^{14}C/^{12}C$ ratio is almost zero. It forms carbon dioxide, which plants growing nearby take up in photosynthesis with normal CO_2. This reduces the $^{14}C/^{12}C$ ratio in the plant, and a reduced ratio suggests more decay, i.e. a greater age. As calculated above, 10% ancient carbon makes a living plant appear about 870 years old, so it seems to have been dead for hundreds of years. Trees in the same area also absorb this CO_2 during each growth cycle. Their age can be measured directly by counting tree rings, and the $^{14}C/^{12}C$ ratio in each ring can be measured and compared with the ratio expected for its true age. This gives the local offset due to ancient carbon, which is used to correct the radiocarbon age of organic material from the vicinity.

© OCR 2020

stemup.co.uk

9 This question is about accelerator mass spectrometry (lines 83–107).

(a) A doubly-charged carbon-14 atom is accelerated through a potential difference of 4.2 MV and enters a uniform magnetic field of strength 0.72 T. Use the equation given in line 102 to find *r*, the radius of the circular arc it follows.

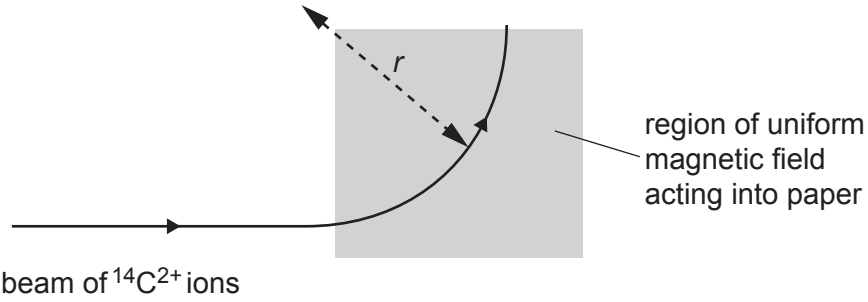

Data: mass of $^{14}C^{2+}$ ion = 2.33×10^{-26} kg

$E_k = QV$, $p = \sqrt{(2mE_k)} = \sqrt{(2 \times 2.33 \times 10^{-26} \times 3.2 \times 10^{-19} \times 4.2 \times 10^{6})}$

$p = 2.50 \times 10^{-19}$ N s

$r = p / BQ = 2.50 \times 10^{-19} / (0.72 \times 3.2 \times 10^{-19})$

radius of arc = ..1.1..... m **[3]**

(b) Explain why it is important to ensure that no $^{12}CH_2^{2+}$ and $^{13}CH^{+}$ ions reach the second deflecting magnet (See **Fig. 6** in the Advance Notice Article).

$^{12}CH_2^{2+}$ and $^{13}CH^{+}$ ions have the same mass (14 u) as ^{14}C.

Those with the same charge are deflected by the same amount in the magnetic field, so they would be counted as ^{14}C, producing spurious (too high) ^{14}C results.

..... **[2]**

END OF QUESTION PAPER

© OCR 2020

ADDITIONAL ANSWER SPACE

If additional space is required, you should use the following lined page(s). The question number(s) must be clearly shown in the margin(s).

© OCR 2020

OCR
Oxford Cambridge and RSA

Copyright Information

OCR is committed to seeking permission to reproduce all third-party content that it uses in its assessment materials. OCR has attempted to identify and contact all copyright holders whose work is used in this paper. To avoid the issue of disclosure of answer-related information to candidates, all copyright acknowledgements are reproduced in the OCR Copyright Acknowledgements Booklet. This is produced for each series of examinations and is freely available to download from our public website (www.ocr.org.uk) after the live examination series.

If OCR has unwittingly failed to correctly acknowledge or clear any third-party content in this assessment material, OCR will be happy to correct its mistake at the earliest possible opportunity.

For queries or further information please contact The OCR Copyright Team, The Triangle Building, Shaftesbury Road, Cambridge CB2 8EA.

OCR is part of the Cambridge Assessment Group; Cambridge Assessment is the brand name of University of Cambridge Local Examinations Syndicate (UCLES), which is itself a department of the University of Cambridge.

© OCR 2020