Oxford Cambridge and RSA

Tuesday 17 June 2025 – Morning

A Level Physics B (Advancing Physics)

H557/03 Practical skills in physics

Time allowed: 1 hour 30 minutes

You must have:
- the Data, Formulae and Relationships Booklet

You can use:
- a scientific or graphical calculator
- a ruler (cm/mm)

Please write clearly in black ink. **Do not write in the barcodes.**

Centre number | | | | | | Candidate number | | | | |

First name(s) _____

Last name _____

INSTRUCTIONS
- Use black ink. You can use an HB pencil, but only for graphs and diagrams.
- Write your answer to each question in the space provided. If you need extra space use the lined pages at the end of this booklet. The question numbers must be clearly shown.
- Answer **all** the questions.
- Where appropriate, your answer should be supported with working. Marks might be given for using a correct method, even if your answer is wrong.

INFORMATION
- The total mark for this paper is **60**.
- The marks for each question are shown in brackets **[ ]**.
- Quality of extended response will be assessed in questions marked with an asterisk (*).
- This document has **24** pages.

ADVICE
- Read each question carefully before you start your answer.

© OCR 2025 [601/4745/3]
DC (PQ/SW) 364992/5
OCR is an exempt Charity

Section A

1 This question is about terminal velocity and drag for falling cupcake cases.

(a) A student times how long a cupcake case takes to fall though a height of 2.000 ± 0.005 m using the equipment as shown in **Fig. 1.1**.

Fig. 1.1

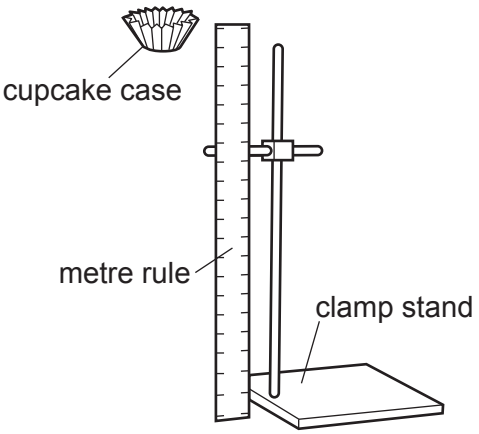

A light-gate timer (not shown) is used, and the measurement repeated five times. The times are shown in **Table 1.1**.

Table 1.1

Time / s
1.68
1.69
1.71
1.70
1.73

(i) Determine the absolute uncertainty in the measurement of time.

Absolute uncertainty = ± ..... s **[1]**

© OCR 2025

(ii) Calculate the average velocity of the cupcake case.
Include the uncertainty in your answer.
Give your answer to an appropriate number of significant figures.

Average velocity = ... ± ..... $m\,s^{-1}$ **[3]**

(b) The cupcake case will accelerate from rest to reach terminal velocity at some point during its fall.
The student is calculating the average velocity.

Comment on how the average velocity relates to the terminal velocity.

.....

.....

.....

.....

..... **[3]**

© OCR 2025

(c) The experiment is repeated with an increasing number of stacked cupcake cases, as shown in **Fig. 1.2**.

Fig. 1.2

The average times are recorded in **Table 1.2**.

Table 1.2

Number of cup cases	**Average time** ***t*** **/ s**
1	
2	1.27
3	0.97
4	0.81
5	0.70

Explain the trend in the relative percentage uncertainty in the calculated values of average velocity as the number of cupcake cases increases.

.....

.....

.....

.....

..... **[2]**

© OCR 2025

(d) Drag force = $\frac{1}{2}\rho A v_t^2$ where v_t is the terminal velocity. A is the cross-sectional area of the falling object.

(i) Show that v_t^2 is proportional to the number of cupcake cases.

[2]

© OCR 2025

(ii)* Calculate the values of average velocity squared in **Table 1.3**.

Determine whether the average velocity calculated in this experiment is close enough to the terminal velocity to be used in the relationship: Drag force = $\frac{1}{2}\rho A v_t^2$.

Describe how the experiment can be improved so that the average velocity is as close as possible to the terminal velocity.

Table 1.3

Number of cupcake cases	Average time t / s	Average velocity v_{ave} / m s^{-1}	Average velocity squared v_{ave}^2 / m^2 s^{-2}
1			
2	1.27		
3	0.97		
4	0.81		
5	0.70		

© OCR 2025

.....

.....

.....

.....

.....

.....

.....

.....

.....

.....

.....

.....

.....

.....

..... **[6]**

© OCR 2025

2 A simple current balance can be used to find the magnetic field strength of a magnetic field.

The current balance shown in **Fig. 2.1** is made from a single rectangular loop of stiff wire connected to a power supply.

The length of wire within the magnetic field is 5.0 cm. The pivots are in the centre of the long edges of the rectangle.

Fig. 2.1

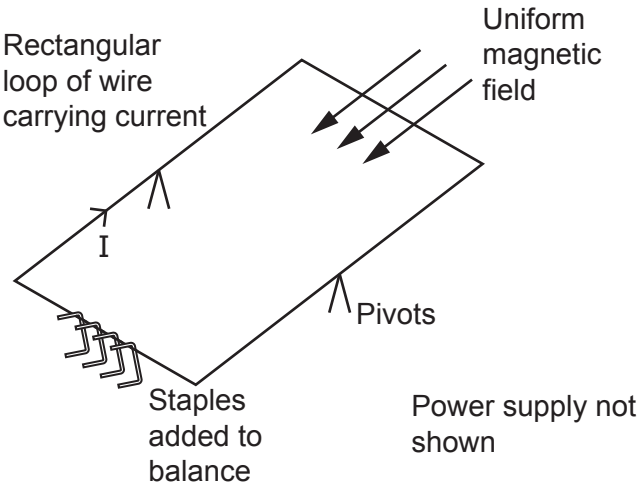

The current is varied, and staples are added to restore the rectangular loop to a horizontal balanced position.

(a) The mean mass of a staple is found to be 0.0325 g.

(i) Describe how the mass of one staple could be found using a standard laboratory balance with a precision of 0.1 g and a maximum of 2000.0 g.

.....

.....

.....

..... **[2]**

(ii) Estimate the absolute uncertainty in the value of mass of one staple obtained by your method in part **(a)(i)**.

Uncertainty = ± ..... g **[2]**

© OCR 2025

(b) The experiment is repeated several times for each value of current.

With a current of 1.5A, the number of staples needed to balance the wire horizontally was found four times. The results are shown in **Table 2.1**.

Table 2.1

Number of staples needed to balance when current = 1.5A
4
5
4
5

Calculate the mean magnetic force exerted on the wire when the current is 1.5A.

Force = ... N **[2]**

© OCR 2025

(c) Further data were collected for other values of current. **Fig. 2.2** shows the graph of the data.

Fig. 2.2

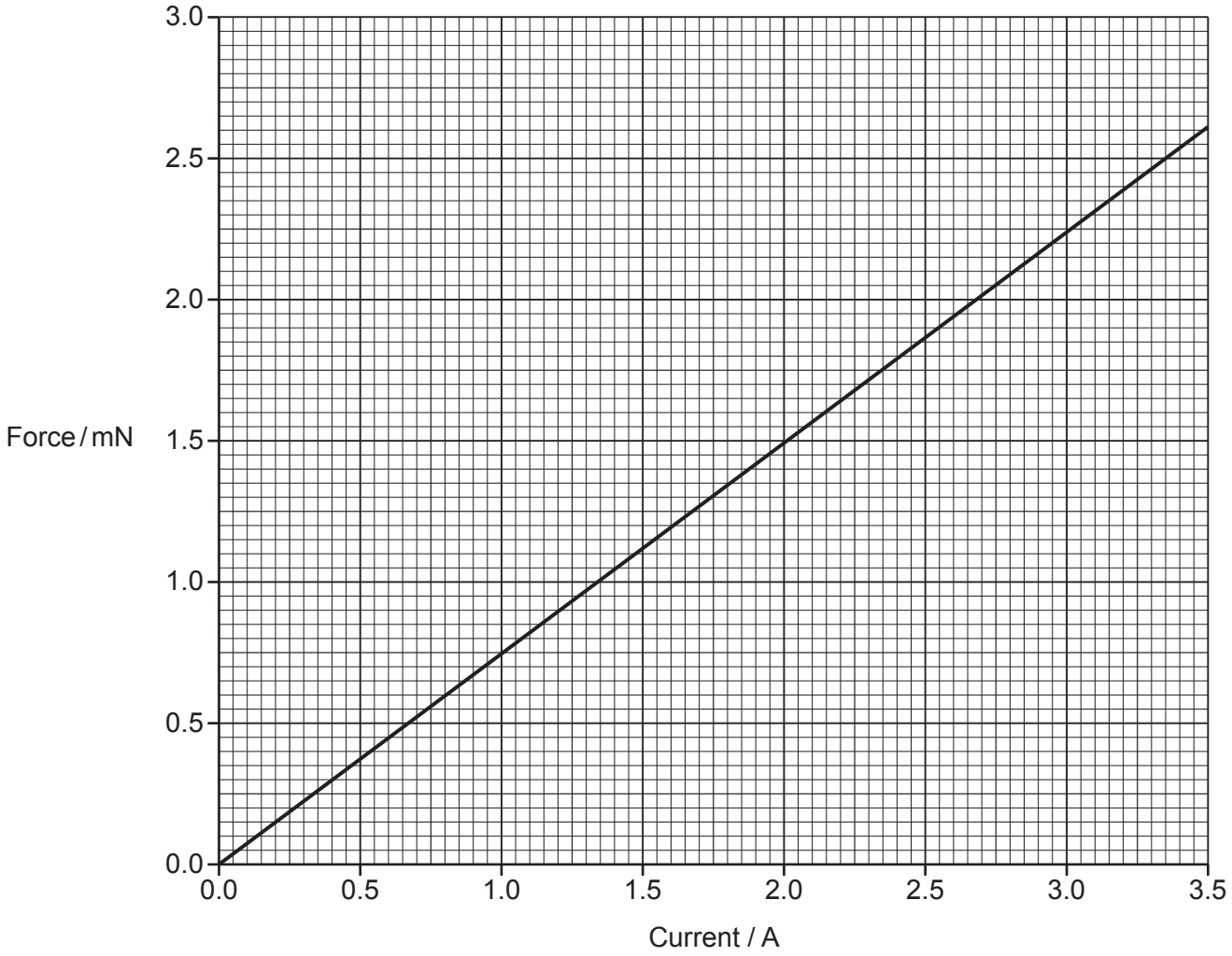

(i) Calculate the gradient of the line.

Gradient = ... **[2]**

© OCR 2025

(ii) Use the value of gradient to calculate the value of magnetic field strength.

Magnetic field strength = ... T **[3]**

(d) Another method to measure magnetic field strength is to use a Hall probe.

A small current passes through a slice of semiconductor material as represented in **Fig. 2.3**.

Fig. 2.3

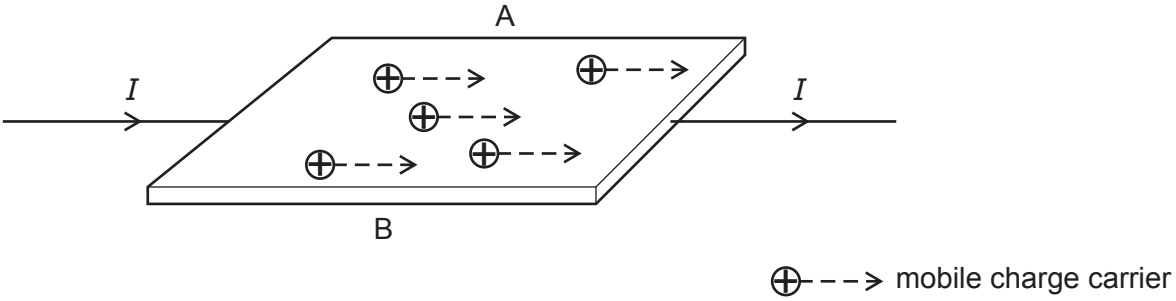

The probe is placed in a magnetic field. The large face of the semiconductor is at right angles to the field.

Explain why a small potential difference is detected across sides A and B of the semiconductor.

.....

.....

.....

.....

.....

.....

..... **[3]**

© OCR 2025

3 This question is about diffraction gratings.

A teacher has a box of 20 unlabelled diffraction gratings. The students are asked to find the number of lines per mm for each grating in the box.

A laser beam is directed downwards at one diffraction grating, as shown in **Fig. 3.1**.
The laser light is red, wavelength 650 nm.
The distance between the grating and the bench is 225 mm.
The diffraction pattern is visible on the surface of the bench.

Fig. 3.1

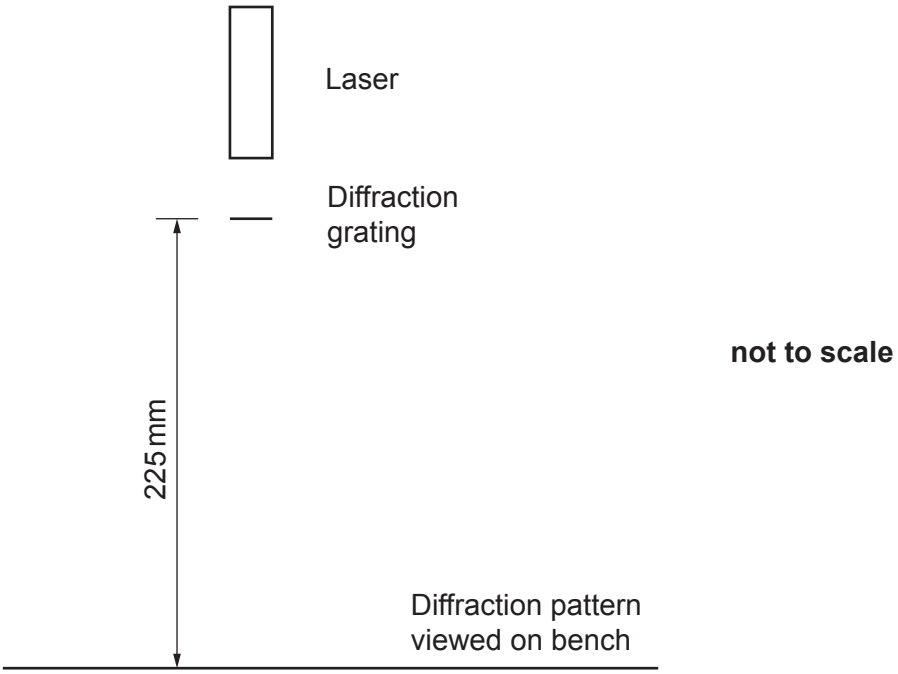

not to scale

(a) The distance between the two first order maxima is measured as 191 mm.

(i) Calculate the angle between the straight-through direction and the first order maximum.

Angle = ... ° **[2]**

© OCR 2025

(ii) Calculate the number of lines per mm on the diffraction grating.

Number of lines per mm = ... mm^{-1} **[2]**

(b) Describe how you could determine a more accurate value for the number of lines per mm on the diffraction grating.

.....

.....

..... **[2]**

(c) **Table 3.1** shows the values obtained from all 20 diffraction gratings.

Table 3.1

Number of lines per mm				
144	320	590	594	603
156	567	591	599	605
299	588	592	600	605
310	590	593	602	610

Standard values for school diffraction gratings are usually 80 lines / mm, 150 lines / mm, 300 lines / mm and 600 lines / mm.

Explain which set the majority of these gratings are from.
Suggest a value for the **absolute** uncertainty in the published value for the number of lines per mm.

.....

.....

..... **[3]**

© OCR 2025

Section B

4 A student carries out an experiment investigating how the period of oscillation of a mass on a spring varies as the mass is increased. The experimental setup is shown in **Fig. 4.1**.

Fig. 4.1

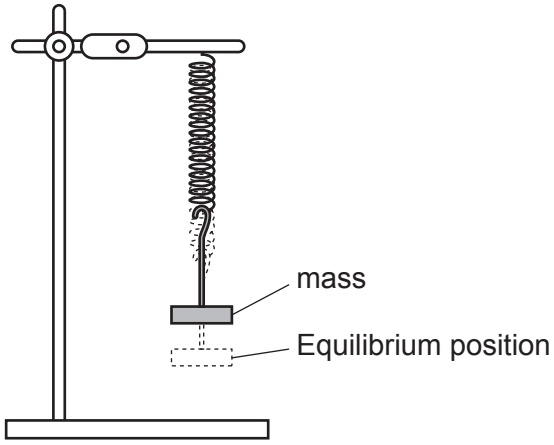

The teacher tells the student that measuring the time for ten oscillations rather than the time for one oscillation will provide more reliable data.

(a) State why measuring ten oscillations provides a more reliable measurement of the time period.

.....

..... **[1]**

(b) One pair of data points is shown below.

Time for ten oscillations = 10.4 s ± 0.5 s
Mass = 0.50 kg ± 0.01 kg

The student decides to ignore the uncertainty in the mass and the teacher agrees.

Explain whether this is a reasonable decision. Use calculations in your answer.

.....

.....

.....

..... **[2]**

© OCR 2025

BLANK PAGE

DO NOT WRITE ON THIS PAGE

Question 4 continues on page 16

© OCR 2025

The student gathers the data in **Table 4.1**.

Table 4.1

Mass / kg	Time for ten oscillations (±0.5) / s	Time for one oscillation, T / s	T^2 / s^2
0.10	4.9	0.49	0.240
0.20	5.9	0.59	0.348
0.30	7.9	0.79	0.624
0.40	9.2	0.92	0.846
0.50	10.4	1.04	1.082
0.60	10.9	1.09	1.188
0.70	12.0		

(c) The student plots the data as a graph as shown in **Fig. 4.2** and includes uncertainty bars for T^2 values based on the uncertainty value given in part **(b)**.

(i) Complete **Table 4.1** and plot the remaining point on **Fig. 4.2**. **[2]**

(ii) Calculate the uncertainty in the value of T^2 for the final data point and add these uncertainty bars to the graph.

[3]

(iii) Draw a line of best fit on **Fig. 4.2**. **[1]**

© OCR 2025

Fig. 4.2

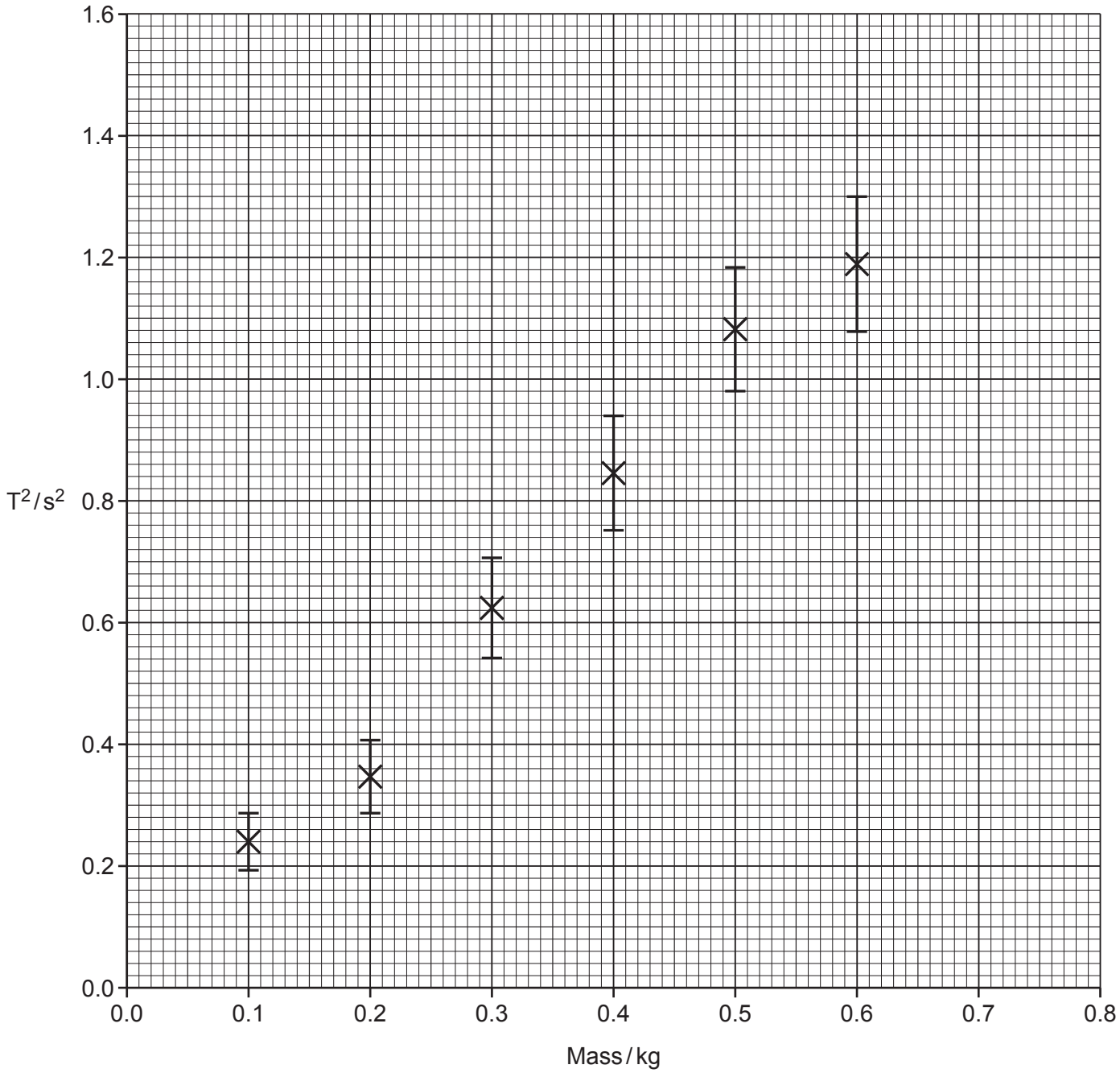

© OCR 2025

(iv) A different student calculates their gradient to be $2.05\,s^2kg^{-1}$.

Show that the spring constant of the oscillating system is approximately $19\,Nm^{-1}$.

[2]

© OCR 2025

BLANK PAGE

DO NOT WRITE ON THIS PAGE

Question 4 continues on page 20

© OCR 2025

(d) The student develops their experiment to investigate resonance. In the modified experiment, the oscillations are driven by a signal generator and vibrator as shown in **Fig. 4.3**.

Fig. 4.3

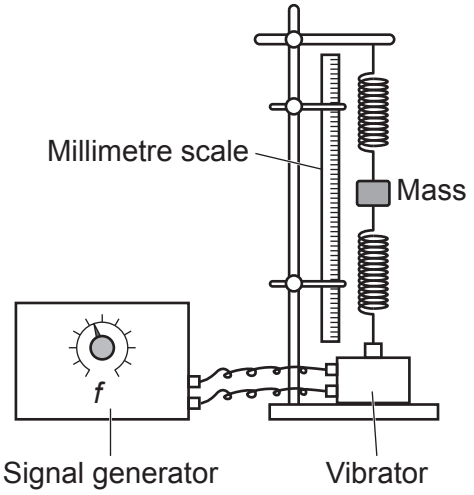

(i)* Suggest how the student could use this apparatus to investigate how the resonant frequency of the system varies with mass. You should describe the experimental process including:

- How the student could obtain precise determinations of the resonant frequencies.
- Describe and explain the relationship between resonant frequency and mass you would expect the student to obtain.
- Include in your explanations how the amplitude would vary with frequency for a given mass.

You may use diagrams in your response.

© OCR 2025

.....

.....

.....

.....

.....

.....

.....

.....

.....

.....

.....

.....

.....

.....

..... **[6]**

(ii) Measurements of mass in space can be challenging.
Suggest briefly how to adapt the method shown in **Fig. 4.3** to measure mass in zero g environments.

Estimate a reasonable spring constant for the system, if it were to be used to measure an astronaut's mass.
Assume that the time period of the system is designed to be about 2 s for a typical mass.

.....

..... **[3]**

END OF QUESTION PAPER

© OCR 2025

EXTRA ANSWER SPACE

If you need extra space use these lined pages. You must write the question numbers clearly in the margin.

© OCR 2025

© OCR 2025

OCR
Oxford Cambridge and RSA

Copyright Information

OCR is committed to seeking permission to reproduce all third-party content that it uses in its assessment materials. OCR has attempted to identify and contact all copyright holders whose work is used in this paper. To avoid the issue of disclosure of answer-related information to candidates, all copyright acknowledgements are reproduced in the OCR Copyright Acknowledgements Booklet. This is produced for each series of examinations and is freely available to download from our public website (www.ocr.org.uk) after the live examination series.

If OCR has unwittingly failed to correctly acknowledge or clear any third-party content in this assessment material, OCR will be happy to correct its mistake at the earliest possible opportunity.

For queries or further information please contact The OCR Copyright Team, The Triangle Building, Shaftesbury Road, Cambridge CB2 8EA.

OCR is part of Cambridge University Press & Assessment, which is itself a department of the University of Cambridge.

© OCR 2025