Oxford Cambridge and RSA

Thursday 6 June 2024 – Morning

A Level Physics B (Advancing Physics)

H557/02 Scientific literacy in physics

Time allowed: 2 hours 15 minutes

You must have:
- a clean copy of the Advance Notice Article (inside this document)
- the Data, Formulae and Relationships Booklet

You can use:
- a scientific or graphical calculator
- a ruler (cm/mm)

Please write clearly in black ink. **Do not write in the barcodes.**

Centre number | | | | | | Candidate number | | | | |

First name(s) _____

Last name _____

INSTRUCTIONS
- Use black ink. You can use an HB pencil, but only for graphs and diagrams.
- Write your answer to each question in the space provided. If you need extra space use the lined pages at the end of this booklet. The question numbers must be clearly shown.
- Answer **all** the questions.
- **Use the Insert to answer questions in Section C.**
- Where appropriate, your answer should be supported with working. Marks might be given for using a correct method, even if your answer is wrong.

INFORMATION
- The total mark for this paper is **100**.
- The marks for each question are shown in brackets **[ ]**.
- Quality of extended response will be assessed in questions marked with an asterisk (*).
- This document has **28** pages.

ADVICE
- Read each question carefully before you start your answer.

© OCR 2024 [601/4745/3]
DC (ST/FC) 340291/4
OCR is an exempt Charity

SECTION A

1 Parasailing is an adventure sport. The parasailor is pulled behind a motor boat as shown in **Fig. 1**.

Fig. 1 (not to scale)

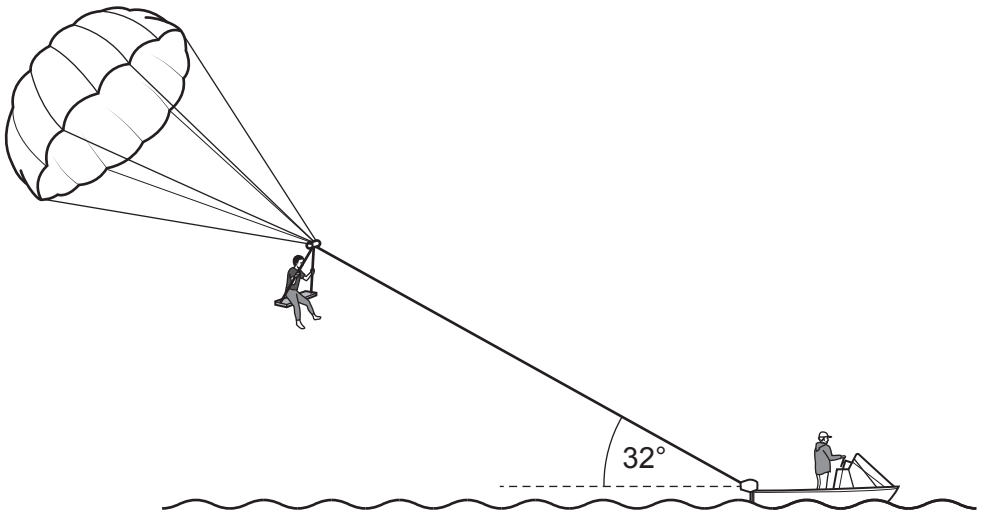

The tension in the rope connecting the boat to the parasail is 550 N. The parasailor is moving horizontally at constant velocity.

(a)
(i) Calculate the vertical component of the tension in the rope.

vertical component = ... N **[2]**

(ii) The combined weight of the parasailor and sail is 870 N. Calculate the vertical upwards force on the parasailor and sail.

vertical upwards force = ... N **[1]**

© OCR 2024

(iii) Calculate the power required to pull the parasailor and sail through the air at a horizontal velocity of $5.8\,\mathrm{m\,s^{-1}}$. Explain your reasoning.

power = ... W

Explanation: .....

.....

..... **[3]**

(b) Here are some data about the rope that attaches the sail and parasailor to the boat.

diameter = 12.0 mm
Young modulus = 13.2 GPa
length = 240 m

Calculate the extension of the rope when the tension in the rope is 550 N.

extension = ... m **[2]**

(c) The boat accelerates. State whether the tension in the rope will increase, decrease or remain at 550 N when the parasail is moving at a greater constant horizontal velocity. Explain your answer.

.....

.....

.....

..... **[2]**

© OCR 2024

2 The circuit shown in **Fig. 2.1** is used to determine the resistivity of a wire.

Fig. 2.1

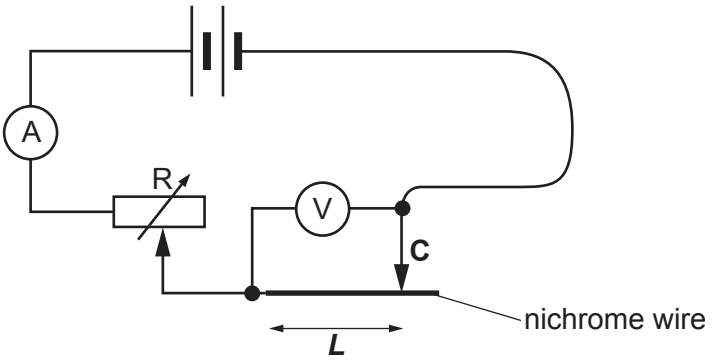

The moving contact **C** changes the length of wire ***L*** in the circuit. The variable resistor is used to keep the current in the wire constant.

Fig. 2.2 shows the graph of the results obtained.

Fig. 2.2

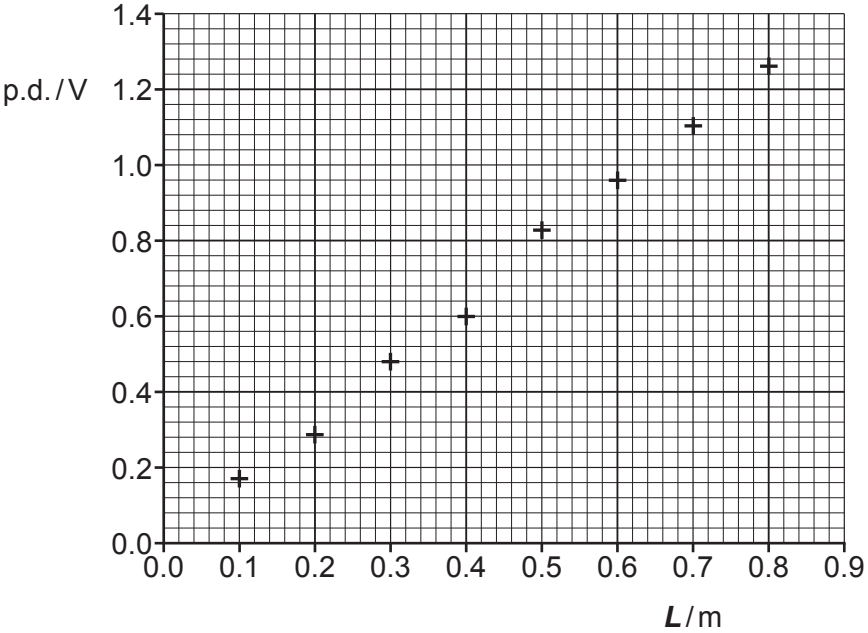

Here are further data used in the determination of the resistivity:

diameter of the wire = $5.2 \times 10^{-4} \pm 0.1 \times 10^{-4}$ m

current in the wire in the circuit = 0.29 ± 0.01 A.

© OCR 2024

(a) Draw a best-fit line on **Fig. 2.2**. Calculate the gradient of the line.

gradient = ... $V\,m^{-1}$ **[2]**

(b) Use the value of the gradient and the further data to determine the resistivity of the material.

Ignore the uncertainties at this stage.

resistivity = ... $\Omega\,m$ **[2]**

(c) Use the uncertainty in the diameter and current values to determine the uncertainty in your value for resistivity calculated above. Ignore any possible uncertainties in the length and p.d. values.

uncertainty in value of resistivity = ± ..... $\Omega\,m$ **[2]**

(d) A student repeats the experiment but does not control the current. This leads to higher current values for shorter lengths of wire. Describe and explain the change to the shape of the graph.

.....

.....

.....

.....

.....

.....

..... **[3]**

© OCR 2024

3 This question is about simple harmonic motion and resonance.

A 0.25 kg mass is hung from a spring of spring constant 23.0 N m^{-1}.

(a) Show that the extension of the spring is about 0.11 m. This is the equilibrium position.

[1]

Fig. 3.1 shows how the resultant force on the mass changes with the extension of the spring. Negative force values show that the resultant force is upwards.

Fig. 3.1

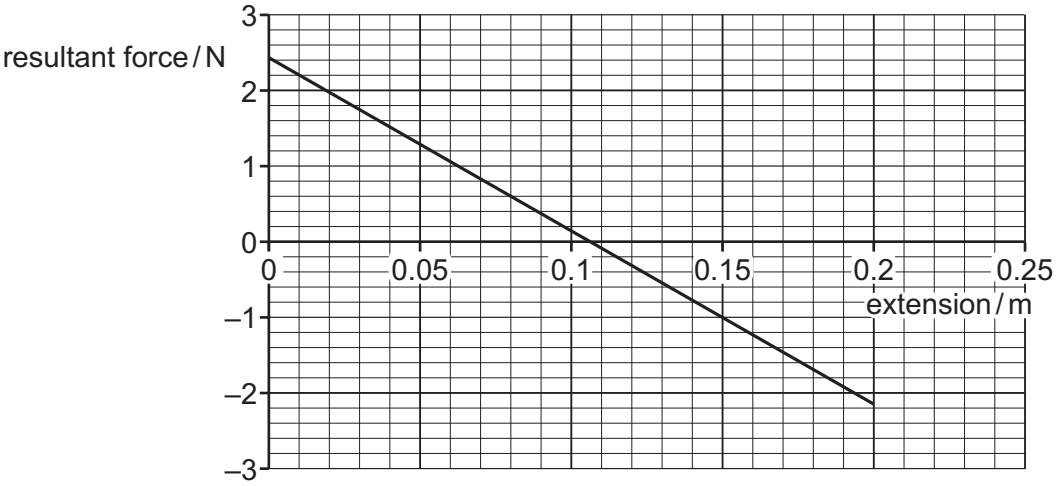

(b) The spring is extended a further 0.03 m from the equilibrium position and the mass is released.

(i) Refer to **Fig. 3.1** to explain why the mass will oscillate with simple harmonic motion for oscillations of amplitude less than about 0.11 m.

.....

.....

.....

.....

..... **[2]**

© OCR 2024

(ii) Explain why the oscillation will **not** be simple harmonic for oscillations with a greater amplitude than 0.11 m.

.....

.....

.....

.....

..... **[2]**

(c) The spring and mass are attached to a vibration generator as shown in **Fig. 3.2**. The vibration generator oscillates the spring through a range of frequencies from 0.1 Hz to 3.0 Hz.

Determine the frequency at which the greatest amplitude of oscillations will be observed.

Explain your reasoning.

Fig. 3.2 (not to scale)

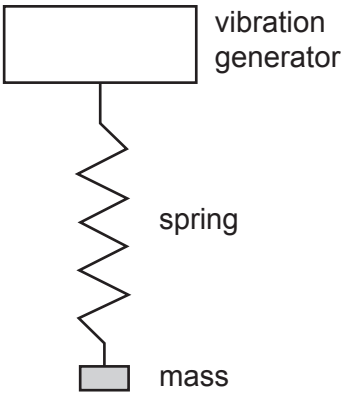

frequency = ... Hz

.....

.....

.....

..... **[3]**

© OCR 2024

(d) The hydrogen chloride molecule (HC*l*) can be modelled as a light mass (the hydrogen atom) attached to a much heavier mass (the chlorine atom) by an elastic spring. When the hydrogen oscillates at one end of the 'spring' it can be assumed that the chlorine remains stationary.

Explain, using relevant calculations, why the HC*l* molecule absorbs infrared radiation of wavelength 3.3×10^{-6} m more strongly than other wavelengths.

spring constant of HC*l* = 550 N m^{-1}
mass of hydrogen atom = 1.7×10^{-27} kg

.....

.....

.....

..... **[3]**

© OCR 2024

BLANK PAGE

PLEASE DO NOT WRITE ON THIS PAGE

© OCR 2024

SECTION B

4 This question is about different models of light. A laser shines monochromatic light perpendicularly on a diffraction grating as indicated in **Fig. 4.1**.

Fig. 4.1 (not to scale)

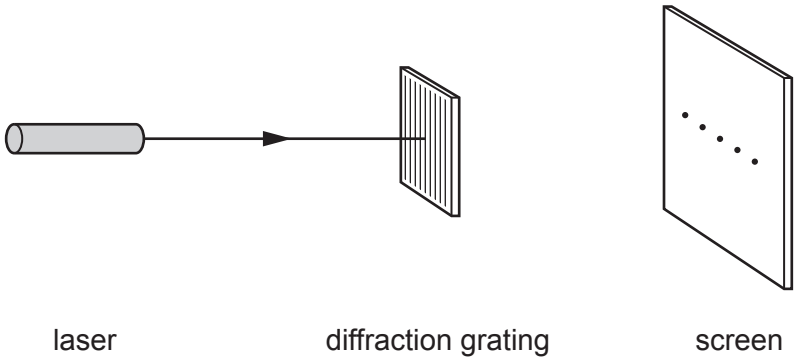

(a) Explain, using the concepts of path difference and phase, why a series of bright dots is seen across the screen.

.....

.....

.....

..... **[2]**

(b) Ultraviolet light of wavelength 175 nm is incident perpendicularly on a grating of 300 lines mm^{-1}.

(i) Calculate the angle to the **third** order maximum.

angle = ...° **[2]**

(ii) Calculate the highest order of maximum that is produced using this apparatus.

highest order of maximum = ... **[2]**

© OCR 2024

(iii) Ultraviolet light of the same wavelength from a point source is incident on a clean zinc surface. Electrons are ejected from the metal surface.

Use the equation $E_{k(max)} = hf - \phi$ to calculate the maximum kinetic energy of the electrons ejected.

ϕ, the work function of zinc = 4.3 eV

$E_{k(max)}$ = ... J **[2]**

(iv) Although the energy carried by a wave is proportional to the intensity of the source, it is observed that the maximum kinetic energy of the ejected electrons is independent of intensity.

- Explain this observation using the idea of light as photons.
- Suggest and explain the effect of increasing the intensity of light has on the ejection of electrons.

.....

.....

.....

.....

.....

.....

.....

..... **[3]**

© OCR 2024

(c) A student suggests the set-up shown in **Fig. 4.2**.

Fig. 4.2

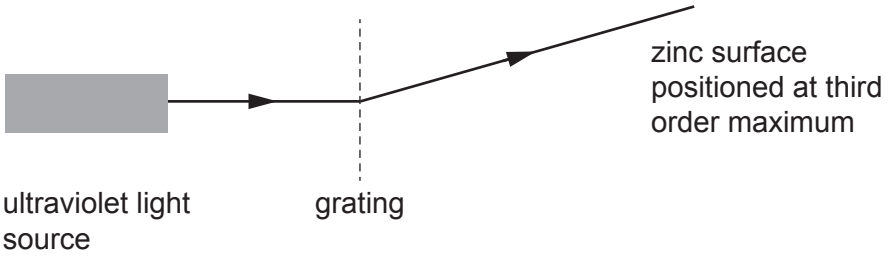

Electrons are ejected from the zinc surface.

Explain how considering light to be **either** only a particle **or** only a wave **cannot** explain **diffracted** light ejecting electrons from the zinc surface. Suggest how the phasor model of light can explain this observation.

.....

.....

.....

.....

.....

.....

.....

.....

.....

.....

..... **[4]**

© OCR 2024

5 **Fig. 5.1** represents the path of an alpha particle that passes near a positively charged nucleus. θ is the deflection angle.

Fig. 5.1

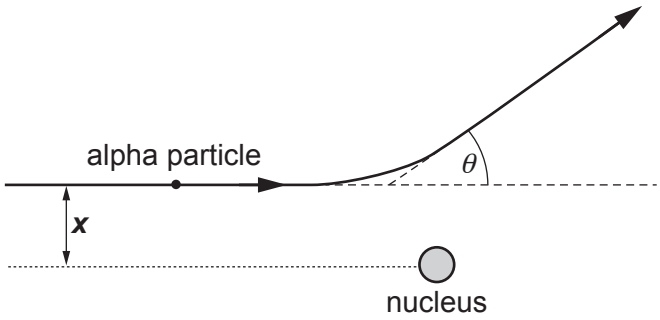

The distance ***x*** is the 'aiming error'.

(a) Describe and explain how the deflection angle of an alpha particle of the same energy with a smaller aiming error compares to the angle θ shown in **Fig. 5.1**.

.....

.....

.....

.....

.....

..... **[3]**

(b) If the aiming error ***x*** is zero, the alpha particle is deflected through 180°. At the distance of nearest approach to the nucleus the alpha particle is instantaneously stationary.

An alpha particle of energy 4.5 MeV is deflected through 180° by a silver nucleus, $^{107}_{47}Ag$.

(i) Calculate the distance of nearest approach of the alpha particle to the silver nucleus.

distance = ... m **[2]**

© OCR 2024

(ii) State why this value gives a **maximum** radius for the silver nucleus.

.....

..... **[1]**

(c)* Electron diffraction can give a better determination of the radius of a nucleus.

Electrons accelerated to 250 MeV are diffracted by nuclei to give a diffraction minimum at angle θ where $\sin\theta = \frac{1.22\lambda}{d}$, where d is the diameter of the nucleus and λ is the de Broglie wavelength of the electron. (**Fig. 5.2**)

Fig. 5.2

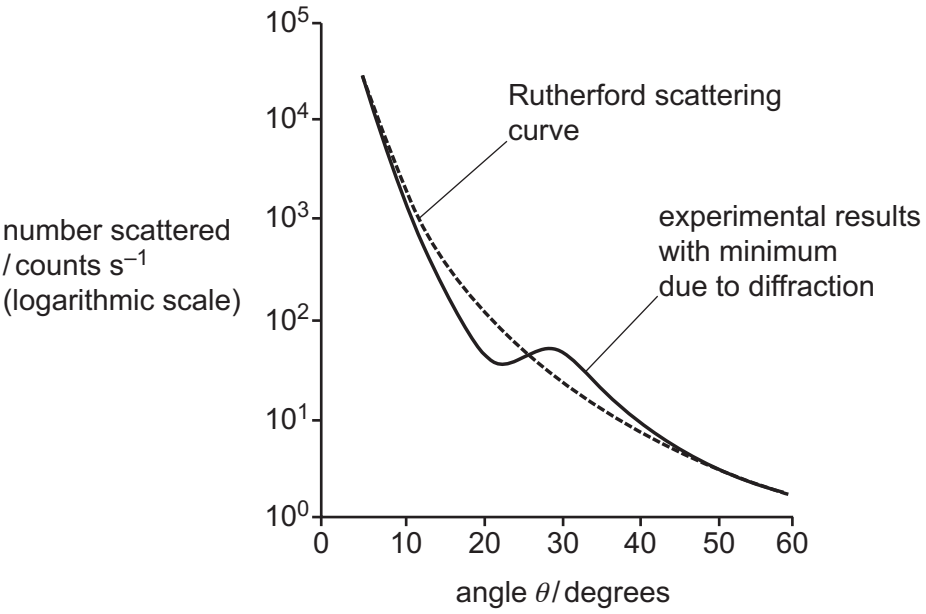

Explain why electrons can get closer to the nucleus than alpha particles.

Calculate the relativistic factor for the accelerated electrons and use this to show that the electrons are moving at nearly the speed of light.

Use the approximation *momentum* $p = \frac{E}{c}$, where E is the energy of the electron, to calculate the de Broglie wavelength and then use information from the graph to calculate a value for the diameter of the nucleus. **[6]**

rest energy of electron = 0.511 MeV

.....

.....

.....

.....

.....

© OCR 2024

© OCR 2024

(d) Electrons accelerated to GeV energies are scattered by particles within individual nucleons. **Fig. 5.3** represents such an event.

Fig. 5.3

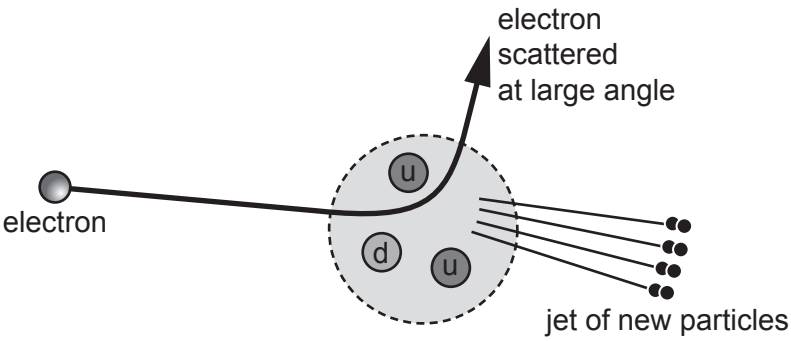

(i) State the nucleon that is shown in **Fig. 5.3**.

..... **[1]**

(ii) Suggest and explain why the kinetic energy of the electron is lower after it has scattered from the nucleon.

.....

.....

.....

..... **[2]**

© OCR 2024

6 This question is about isotopes of uranium and their uses.

Uranium-238 is the most common isotope of uranium. It decays in a series of steps to the stable isotope, lead-206.

The first step in the decay series is:

$^{238}_{92}U \longrightarrow ^{234}_{90}Th + ^{4}_{2}He$

(a)
(i) Thorium-234 decays into protactinium-234. Identify the particle X in the equation below.

$^{234}_{90}Th \longrightarrow ^{234}_{91}Pa + ^{0}_{-1}e + X$

..... **[1]**

(ii) The masses of the two nuclei in part **(i)** and the beta-minus particle are given below.

Calculate the energy released in the decay.

mass of thorium-234 nucleus: 233.9940 u
mass of protactinium-234 nucleus: 233.9934 u
mass of electron: 0.00055 u
1 atomic mass unit (1 u) = 1.661×10^{-27} kg

energy = ... J **[2]**

(iii) State why your answer to **(a)(ii)** is the **maximum** energy of the beta-minus particle.

..... **[1]**

© OCR 2024

(b) The age of a sample can be determined by measuring the ratio of uranium-238 to lead-206. It is assumed that all the lead-206 in the sample is produced by the decay series beginning with uranium-238.

The Voyager 1 spacecraft was launched in 1977. It is now moving through space beyond the Solar System. It carries a metal disk giving information about Earth. Included on the disk is a sample of pure uranium-238 with an initial activity of 9.6 Bq.

(i) Calculate the number of uranium nuclei in the sample when the spacecraft was launched.

half-life of uranium-238 = 4.51×10^9 years

number of nuclei = ... **[2]**

(ii) Calculate how many years it will take for one third of the original nuclei in the sample to become stable lead-206.

Assume that the half-life of uranium is the time for half the original nuclei to decay through the series to lead-206.

.....years **[3]**

© OCR 2024

The isotope uranium-235 is used in nuclear fission reactors.

(c)

(i) Explain how the reaction below can lead to a chain reaction.

$$^{1}_{0}n + ^{235}_{92}U \longrightarrow ^{90}_{37}Rb + ^{143}_{55}Cs + 3^{1}_{0}n$$

.....

.....

..... **[2]**

(ii) In a reactor, uranium-238 can capture a neutron to become unstable uranium-239. This decays through two beta decays to plutonium-239 which will fission.

$$^{239}_{92}U \xrightarrow{\beta\ \text{decay}} ^{239}_{93}Np \xrightarrow{\beta\ \text{decay}} ^{239}_{94}Pu$$

Some designs of reactor can use a mixture of uranium and plutonium isotopes to produce power.

Calculate the minimum mass of neptunium-239 required to produce a steady power of 2.5 MW from the fission of plutonium in a reactor. Explain your reasoning.

Assume that the plutonium is stable and that all the plutonium nuclei are produced by the decay of neptunium-239.

Data:

decay constant of neptunium-239 ($^{239}_{93}Np$) = $3.4 \times 10^{-6}\,s^{-1}$
energy released per fission of plutonium-239 = 3.3×10^{-12} J
mass of neptunium-239 atom = 3.97×10^{-25} kg

minimum mass required = ... kg

Reasoning: .....

.....

..... **[4]**

© OCR 2024

SECTION C

This section is based on the Advance Notice Article, which is an insert.

7 **Fig. 1** in the article shows how the atmosphere affects the transmission of different wavelengths of electromagnetic radiation.

(a) Suggest why a logarithmic scale is used on the *x*-axis of the graph and why this choice of scale can make interpreting the data more difficult.

.....

.....

.....

..... **[2]**

(b) **Fig. 1** in the article shows that half the gamma rays incident at the top of the atmosphere are absorbed as they pass through the first 120 km of the atmosphere.

Suggest and explain what may affect the proportion of gamma rays absorbed per km as they pass through the atmosphere.

.....

.....

.....

..... **[2]**

© OCR 2024

8 This question is about the resolution of the James Webb Space Telescope (JWST) (lines 19–25 and lines 47–51).

(a) The diameter of the primary mirror is 6.5 m. Show that the angular resolution limit of the telescope operating at a wavelength of 2000 nm is about 0.4 μrad.

[1]

(b) **Fig. 8** shows an image of a galaxy taken by the JWST.

A and B are points marking the edge of the main section of the galaxy.

Fig. 8

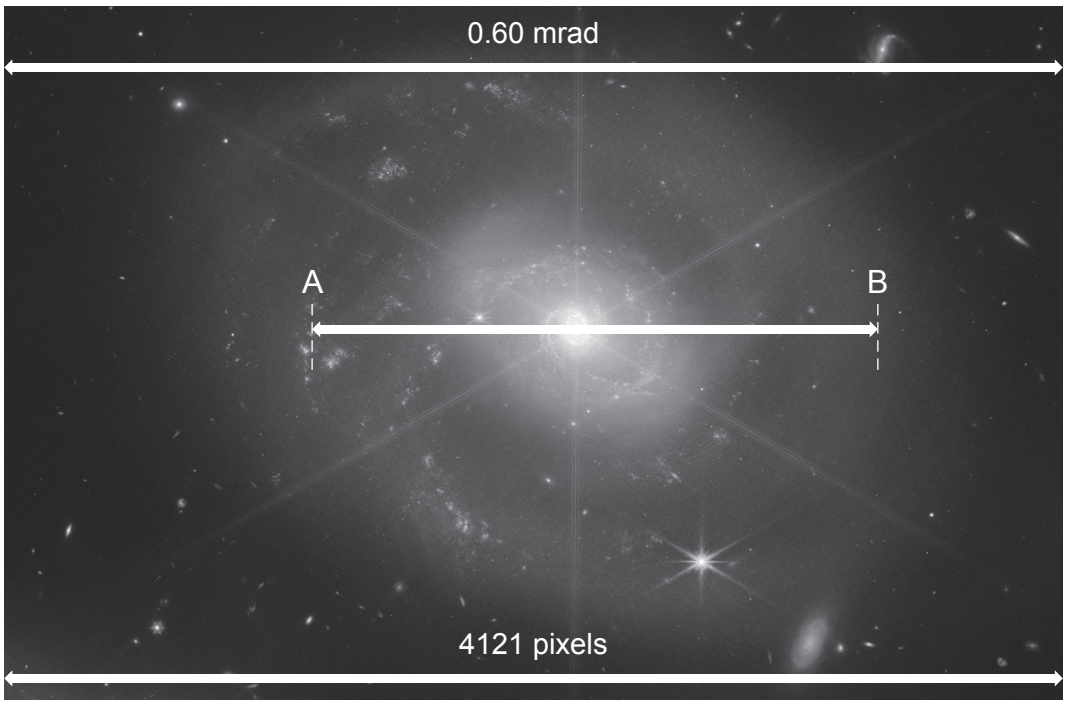

(i) Calculate the image resolution in rad pixel^{-1}.

Suggest why the camera is designed to resolve to a smaller angle than that calculated in **(a)**.

image resolution = ... rad pixel^{-1}

Suggestion:

.....

..... **[2]**

© OCR 2024

(ii)* Light emitted from the galaxy at wavelength 657 nm is redshifted to a wavelength of 668 nm (lines 53–61).

Calculate the distance to the galaxy in light years and use this value and information from **Fig. 8** to calculate the width, in light years, of the main section of the galaxy between points A and B. Comment on possible causes of error in the value you obtain.

Hubble constant = 73 km s^{-1} Mpc^{-1}
1 megaparsec (Mpc) = 3.1×10^{22} m
1 light year = 9.5×10^{15} m

Comment: .....

.....

.....

..... **[6]**

© OCR 2024

9 This question is about the Chandra X-ray Observatory (lines 26–32).

The Chandra X-ray Observatory has a highly elliptical orbit. The total energy of the satellite remains constant.

At a distance of 1.5×10^8 m, its furthest point from Earth, the speed of the Chandra is 1.1×10^3 m s^{-1}.

Calculate the speed of the Chandra at a distance of 1.6×10^7 m, its nearest approach to Earth.

Ignore the effect of the Sun and the Moon.

Mass of Earth = 6.0×10^{24} kg

speed = ... m s^{-1} **[4]**

© OCR 2024

10 The JWST orbits at the L2 point (lines 41–49).

(a) Calculate the resultant field strength due to the Earth and the Sun at the L2 point.

Mass of Sun = 2.0×10^{30} kg
Mass of Earth = 6.0×10^{24} kg

resultant field strength = ... N kg^{-1} **[3]**

(b)
(i) Show that the L2 point will make one revolution of the Sun in about 3.2×10^{7} s (one year).

[2]

© OCR 2024

(ii) The mass of the Moon is about 1% that of the Earth. It orbits the Earth at a radius of 3.8×10^8 m.

Suggest and explain the effect of the Moon, if any, on the JWST orbiting around the L2 point.

.....

.....

.....

.....

.....

.....

.....

.....

..... **[3]**

END OF QUESTION PAPER

© OCR 2024

EXTRA ANSWER SPACE

If you need extra space use these lined pages. You must write the question numbers clearly in the margin.

© OCR 2024

© OCR 2024

OCR
Oxford Cambridge and RSA

Copyright Information

OCR is committed to seeking permission to reproduce all third-party content that it uses in its assessment materials. OCR has attempted to identify and contact all copyright holders whose work is used in this paper. To avoid the issue of disclosure of answer-related information to candidates, all copyright acknowledgements are reproduced in the OCR Copyright Acknowledgements Booklet. This is produced for each series of examinations and is freely available to download from our public website (www.ocr.org.uk) after the live examination series.

If OCR has unwittingly failed to correctly acknowledge or clear any third-party content in this assessment material, OCR will be happy to correct its mistake at the earliest possible opportunity.

For queries or further information please contact The OCR Copyright Team, The Triangle Building, Shaftesbury Road, Cambridge CB2 8EA.

OCR is part of Cambridge University Press & Assessment, which is itself a department of the University of Cambridge.

© OCR 2024