Oxford Cambridge and RSA

Thursday 6 June 2024 – Morning

A Level Physics B (Advancing Physics)

H557/02 Scientific literacy in physics

Advance Notice Article

Time allowed: 2 hours 15 minutes

1360830315

INSTRUCTIONS

- Do **not** send this Advance Notice Article for marking. Keep it in the centre or recycle it.

INFORMATION

- This is a clean copy of the Advance Notice Article you have already seen.
- This document has **8** pages.

© OCR 2024 [601/4745/3]
DC (ST) 347601/1

OCR is an exempt Charity

Seeing beyond the visible

Although undetectable to the human eye, objects radiate in many wavelengths beyond the visible spectrum. To better understand the nature of astronomical objects it is necessary to detect all wavelengths of electromagnetic radiation they emit. Since the middle of the twentieth century, scientists and engineers have been designing telescopes to detect these non-visible wavelengths.

The atmosphere is transparent to visible light and radio waves as can be seen in **Fig. 1**. For the purposes of this article, the height of the atmosphere can be taken to be 140 km.

Fig. 1

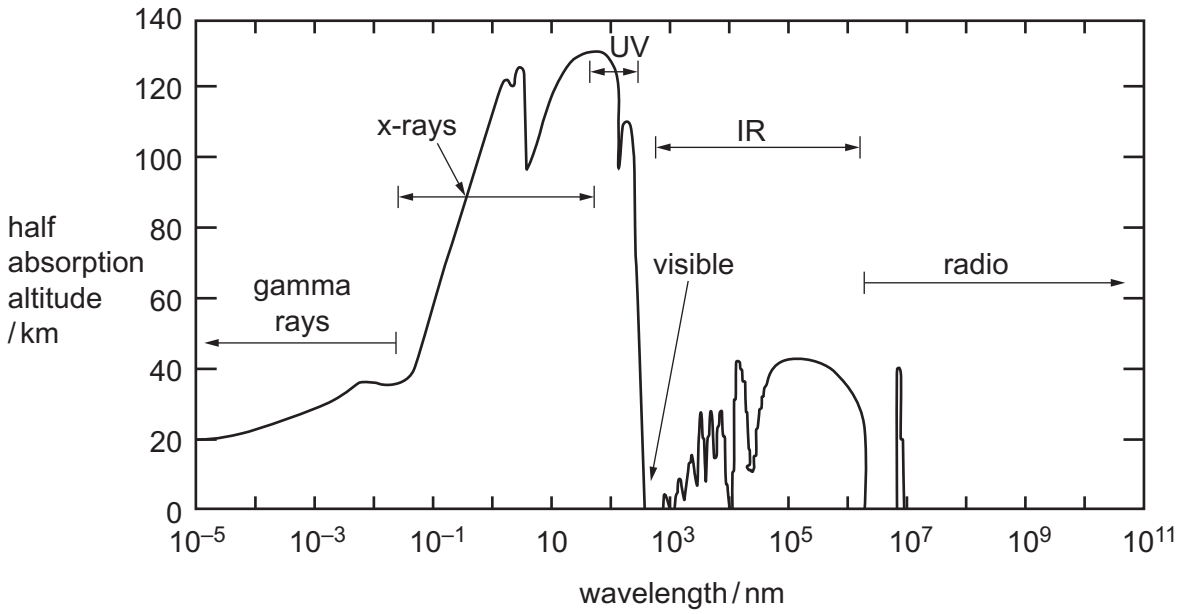

Observations can be made with ground-based telescopes in the visible and radio wavelengths, but to observe in other bands of the spectrum requires telescopes either to be as high up as possible, to minimise the effects of the atmosphere, or launched into space to completely escape the atmosphere.

A problem of resolution

The angular resolution of an optical instrument is the minimum angle that can be resolved due to the diameter of the collecting lens (in binoculars, say) or mirror (in large optical and infrared telescopes and dish radio telescopes) as shown in **Fig. 2**.

Fig. 2

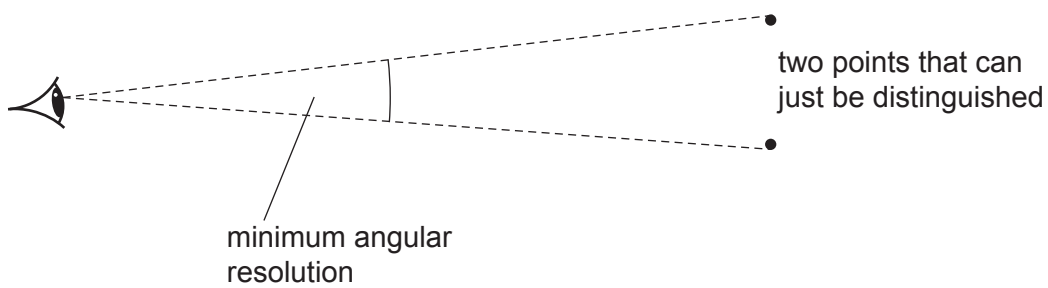

The angular resolution in radians is given by the equation *angular resolution* = $\frac{1.2\lambda}{d}$ where λ is the wavelength of the radiation and d is the diameter of the collecting lens or mirror.

The dependence of resolution on wavelength means that radio receivers, such as the Jodrell Bank telescope, need very large diameter mirrors. The Jodrell Bank dish shown in **Fig. 3** has a diameter of 76.2 m. It collects radio signals of wavelength 0.06 m. The minimum angular separation it can resolve is about four times that of the unaided eye.

Fig. 3 Jodrell Bank main dish

© sciencesprings.wordpress.com, sciencesprings. Item removed due to third party copyright restrictions. Link to material - https://sciencesprings.files.wordpress.com/2015/07/jodrell-bank-lovell-telescope.jpg

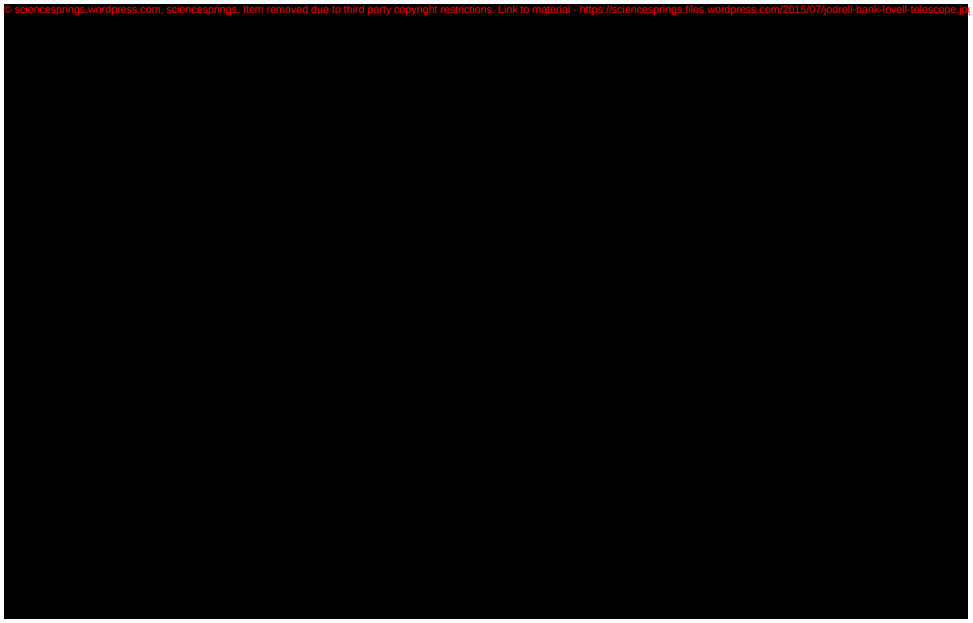

Telescopes in space

The Chandra X-ray Observatory was carried into space by the Space Shuttle in July 1999. It was placed in a highly elliptical orbit, varying its distance from Earth from approximately 1.6×10^7 m (at closest approach) to 1.5×10^8 m (at its furthest from Earth). X-rays are emitted from highly energetic objects such as matter spiralling into black holes and the Chandra has made important observations of X-rays emitted from the region around the super-massive black hole at the centre of our galaxy.

The James Webb telescope (JWST), the largest telescope yet taken into space, was launched on December 25th 2021 from Kourou, French Guiana. It is placed about 1.5×10^9 m beyond Earth in line with Earth and the Sun as illustrated in **Fig. 4**. At this point, known as the L2 point, the gravitational forces from the Sun and Earth combine to give sufficient force on the telescope so that its orbital period around the Sun is the same as that of Earth even though it is further away. In fact, the telescope is not actually on the L2 point but orbits around it as indicated on the diagram. The radius of the orbit around the L2 point is about 8×10^6 m.

Fig. 4 (not to scale)

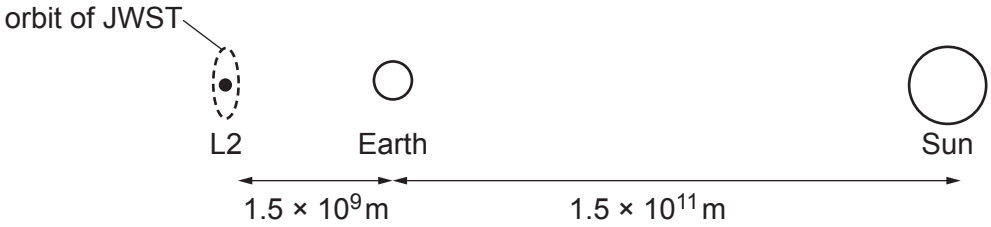

The JWST is an infrared telescope which detects electromagnetic radiation at wavelengths from 600 nm to 29 μm.

Fig. 5

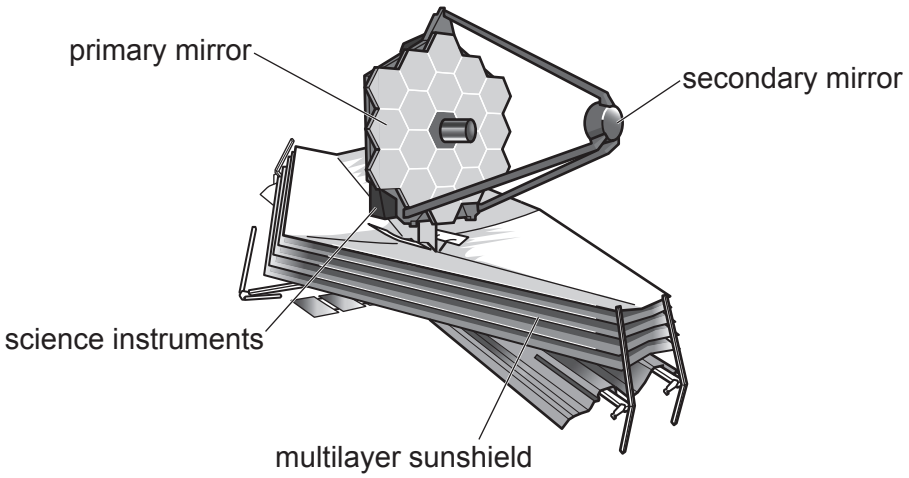

It is important to keep the science instruments as cool as possible. To achieve this, the telescope always faces away from Earth and the Sun. The sunshield reflects much of the radiation and cooling systems keep the operating temperature of the instruments below 50 K.

One of these instruments is a near infrared camera (NIRCam) which can image in two wavelength ranges; from 600 nm to 2300 nm (short wavelength) and 2400 nm to 5000 nm (long wavelength). The short wavelength range uses eight individual sensitive surfaces each of 2040 × 2040 pixels.

In the short wavelength range, the eight surfaces can be combined to give a field of view of approximately 1.2×10^{-3} rad × 6.4×10^{-4} rad.

Fig. 6 Field of view of eight combined sensitive surfaces (simplified)

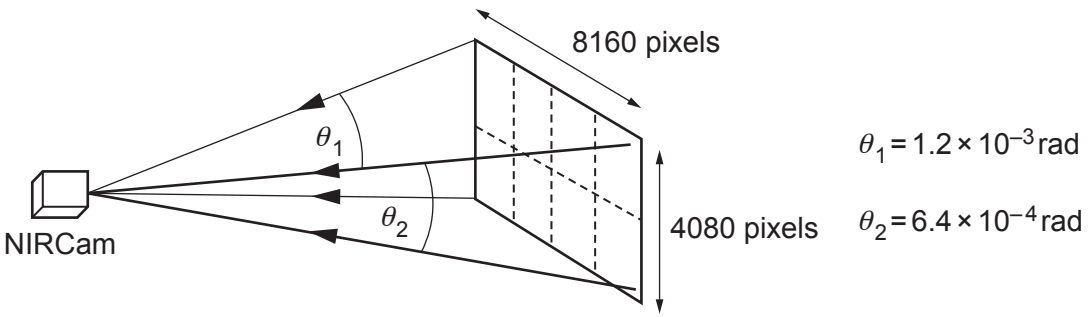

The near infrared spectrograph (NIRSpec) covers the same range of wavelengths as NIRCam and is used to produce spectra of objects of interest. Absorption lines in spectra identify the chemicals present in the source and, through redshift measurements, can give information about the distance to the source.

For objects moving away from Earth at velocities much less than c:

$$\textit{fractional increase in wavelength} = \frac{\lambda_{\text{observed}} - \lambda_{\text{emitted}}}{\lambda_{\text{emitted}}} = \frac{v}{c}$$

where v is the velocity of the light source (for example, a galaxy) and c is the velocity of light.

Hubble's Law states: velocity of recession = $H_0 d$, where H_0 is the Hubble constant and d is the distance to the receding object, hence the distance to the object can be found from its redshift.

Seeing through the clouds

The space between stars is a near-vacuum. Interstellar space has roughly one million atoms per m^3, a factor of 10^{19} less than the atmosphere of Earth.

However, there are regions of space with greater density of gas. Embedded in these gas clouds are grains of dust of diameter about 500 nm composed of carbon, ice and other chemicals.

These grains can absorb, scatter and emit electromagnetic radiation. Radiation of wavelengths greater than the size of the dust grains has little interaction with the dust so whereas short wavelength radiation is scattered by interstellar dust grains, longer wavelengths can pass through. This means that it is possible to observe behind clouds of dust with infrared radiation. This will help the telescope look deep into space and image some of the oldest galaxies, revealing the evolution of the early Universe. It will also, using NIRSpec, record the chemical compositions of planets in the Solar System and beyond. These observations could give evidence of the potential for life on other worlds.

From our astronomical 'backyard' to the furthest reaches of space, images and data from the JWST have already provided a wealth of information to keep researchers busy for years to come and will help to further our understanding of the Universe.

BLANK PAGE

BLANK PAGE

OCR
Oxford Cambridge and RSA

Copyright Information

OCR is committed to seeking permission to reproduce all third-party content that it uses in its assessment materials. OCR has attempted to identify and contact all copyright holders whose work is used in this paper. To avoid the issue of disclosure of answer-related information to candidates, all copyright acknowledgements are reproduced in the OCR Copyright Acknowledgements Booklet. This is produced for each series of examinations and is freely available to download from our public website (www.ocr.org.uk) after the live examination series.

If OCR has unwittingly failed to correctly acknowledge or clear any third-party content in this assessment material, OCR will be happy to correct its mistake at the earliest possible opportunity.

For queries or further information please contact The OCR Copyright Team, The Triangle Building, Shaftesbury Road, Cambridge CB2 8EA.

OCR is part of Cambridge University Press & Assessment, which is itself a department of the University of Cambridge.

© OCR 2024