Oxford Cambridge and RSA

Thursday 16 June 2022 – Morning

A Level Physics B (Advancing Physics)

H557/03 Practical skills in physics

Time allowed: 1 hour 30 minutes

You must have:
- the Data, Formulae and Relationships Booklet

You can use:
- a scientific or graphical calculator
- a ruler (cm/mm)

Please write clearly in black ink. **Do not write in the barcodes.**

Centre number | | | | | | Candidate number | | | | |

First name(s) _____

Last name _____

INSTRUCTIONS
- Use black ink. You can use an HB pencil, but only for graphs and diagrams.
- Write your answer to each question in the space provided. If you need extra space use the lined pages at the end of this booklet. The question numbers must be clearly shown.
- Answer **all** the questions.
- Where appropriate, your answer should be supported with working. Marks might be given for using a correct method, even if your answer is wrong.

INFORMATION
- The total mark for this paper is **60**.
- The marks for each question are shown in brackets **[ ]**.
- Quality of extended response will be assessed in questions marked with an asterisk (*).
- This document has **20** pages.

ADVICE
- Read each question carefully before you start your answer.

© OCR 2022 [601/4745/3]
DC (ST/SW) 305576/4
OCR is an exempt Charity

SECTION A

Answer **all** the questions.

1 This question is about the **polarisation** of electromagnetic waves.

(a) Explain what is meant by the term polarisation and state why all electromagnetic waves can be polarised.

.....

.....

.....

..... **[2]**

(b) A student looks at light reflected from a glass block through one polarising filter. Explain how they could tell if the reflected light shows any polarisation.

.....

.....

.....

.....

.....

..... **[3]**

(c) Another student investigates the polarisation of microwaves using apparatus shown in **Fig. 1.1**.

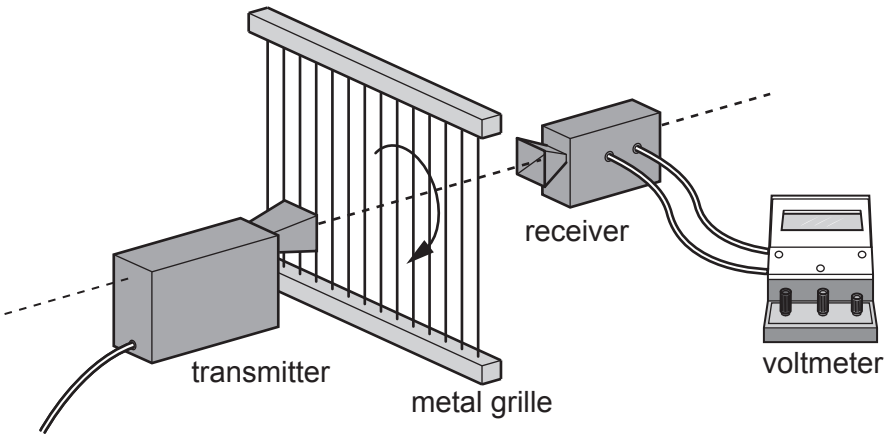

Fig. 1.1

© OCR 2022

The grille starts in the vertical position as shown and is rotated. The intensity of the microwaves at the receiver is measured at different angles.

(i) Describe how the angle of rotation could be measured in a school laboratory.

.....

.....

.....

..... **[2]**

(ii) The results from the investigation are plotted on the graph shown in **Fig. 1.2**. Use data points from the graph below (excluding voltage = 0) to test whether the investigation shows that

Intensity $\propto \cos^2\theta$

Make your conclusion clear.

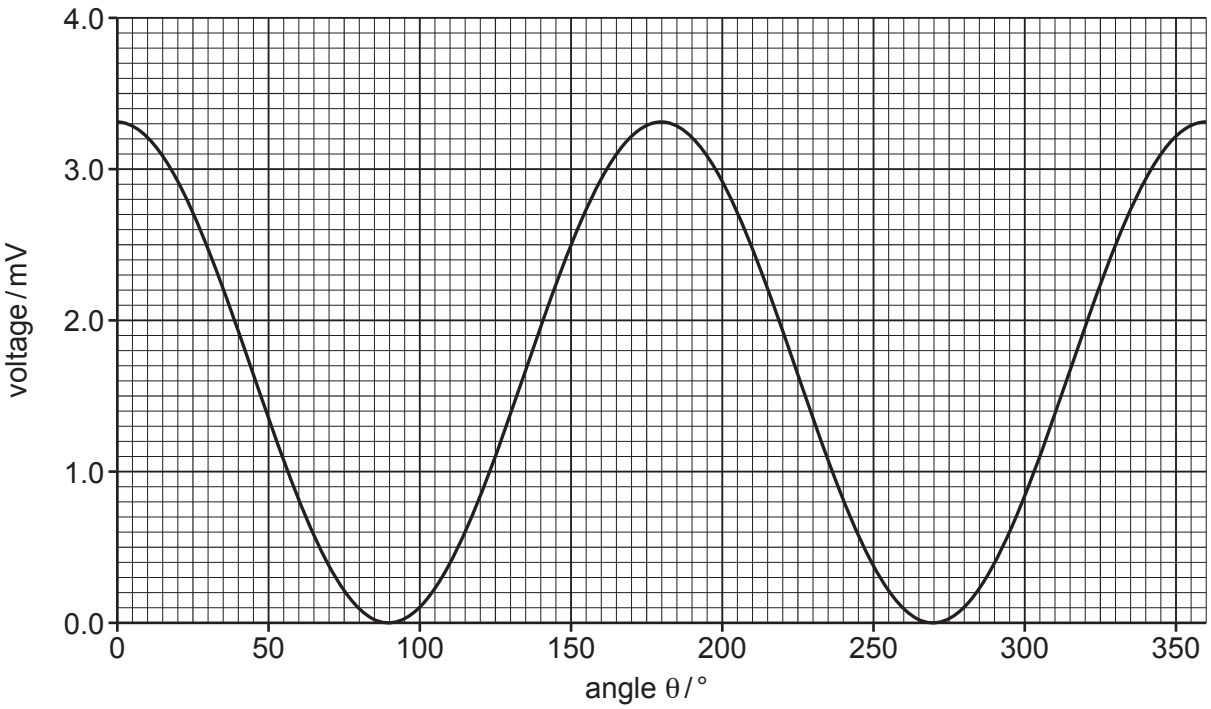

Fig. 1.2

[3]

© OCR 2022

2 This question is about an investigation into the relationship between the pressure and volume of a gas. The relationship is often referred to as Boyle's Law. A student set up the apparatus shown in **Fig. 2.1**.

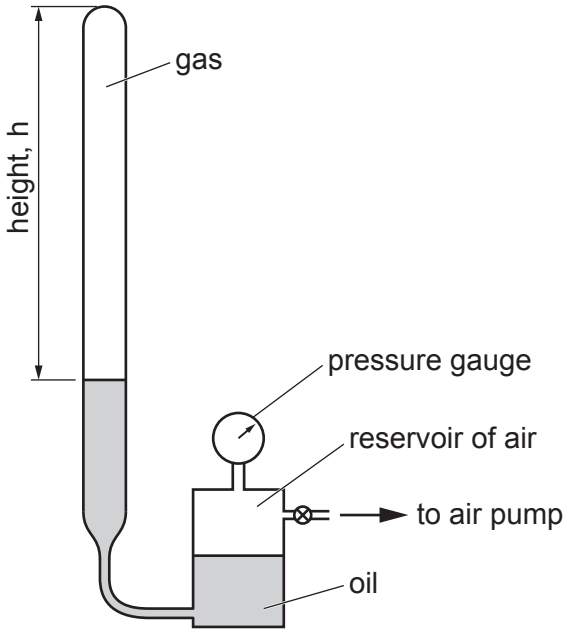

Fig. 2.1

(a) **(i)** Identify a variable which needs to be controlled in the investigation.

..... **[1]**

(ii) Before setting up the apparatus, the student took measurements with vernier calipers of the internal diameter of the tube containing the gas. The student created the dot plot of cross-sectional area shown in **Fig. 2.2**.

Taking into consideration any outliers, calculate a value for the mean and percentage uncertainty of the cross-sectional area of the tube. Give your answers to an appropriate number of significant figures.

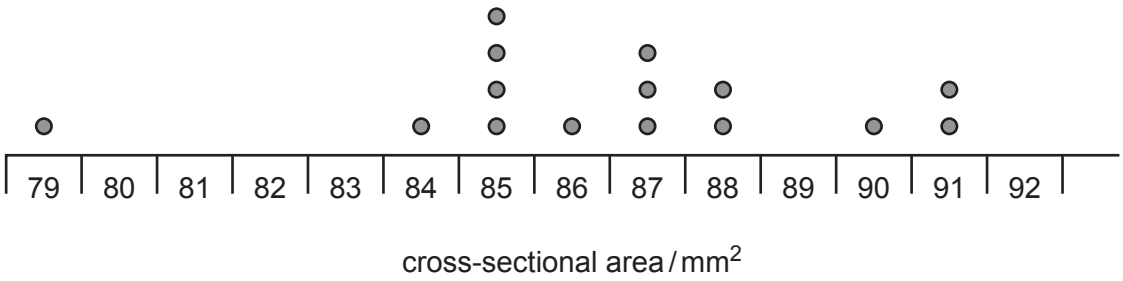

Fig. 2.2

Mean cross-sectional area = ... mm^2 ± ..... % **[4]**

© OCR 2022

(iii) The height, h, of the column of air is measured using a standard laboratory metre rule. Estimate the absolute uncertainty in the measurement and justify your answer.

.....

.....

..... **[2]**

(b) The pressure gauge used in the experiment records excess pressure. The absolute pressure of the gas is given by

absolute pressure = excess pressure + atmospheric pressure

When the pressure gauge reads 255 kPa calculate the value for $\frac{1}{\text{absolute pressure}}$ and state the unit.

Atmospheric pressure = 101 kPa.

$\frac{1}{\text{absolute pressure}}$ = ... unit ..... **[2]**

Question 2 continues on page 6

© OCR 2022

The pressure of the gas is changed and the values for absolute pressure and height of the column of gas are recorded. The data are shown in **Table 2.1**. The student plots a graph to show the relationship between height of the column of gas and 1 / absolute pressure shown in **Fig. 2.3**.

Height / m	1 / absolute pressure
0.150	2.82×10^{-6}
0.200	3.85×10^{-6}
0.250	5.90×10^{-6}
0.300	6.06×10^{-6}
0.350	7.69×10^{-6}
0.400	9.01×10^{-6}

Table 2.1

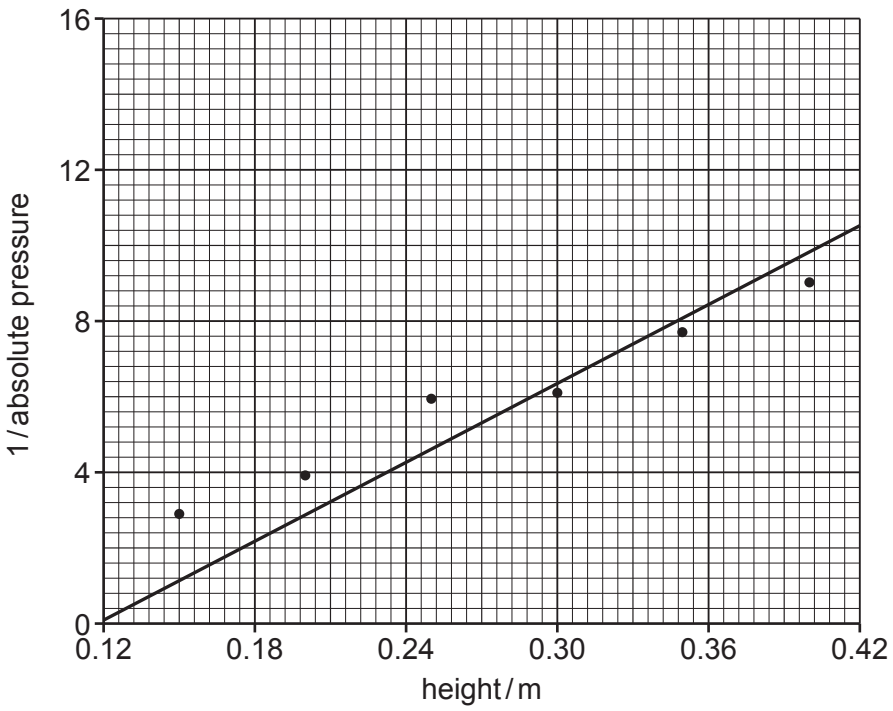

Fig. 2.3

© OCR 2022

(c)* Suggest, with reasons, how the presentation of the graph in **Fig. 2.3** could be improved, and identify any anomalous points.

The student calculates the gradient to be $25 \times 10^{-6}\,\text{kN}^{-1}\,\text{m}$. Explain the physical significance of the gradient, state your assumptions, and estimate *n*, the number of moles of gas that would be present at a temperature of 298 K.

.....

.....

.....

.....

.....

.....

.....

.....

.....

.....

.....

.....

.....

.....

.....

.....

..... **[6]**

© OCR 2022

3 This question is about radioactive decay.

(a) The decay equation is

$$\frac{\Delta N}{\Delta t} = -\lambda N$$

where λ is the decay constant and N is the number of nuclei present. Explain what the decay constant represents for a particular radioisotope and the meaning of the negative sign in the equation.

.....

.....

..... **[2]**

(b) The decay equation can be used to make an iterative model of radioactive decay. Initially a radioactive sample has 5000 nuclei. The decay constant is $\lambda = 0.4\,\text{s}^{-1}$. Using $\Delta t = 1\,\text{s}$ generates the model shown in **Table 3.1**.

Time elapsed / s	Number of nuclei, N	Number of nuclei decaying in $\Delta t = 1\,\text{s}$, $\Delta N = \lambda N \Delta t$	Number of remaining nuclei at t + Δt, $N - \Delta N$
0	5000	2000	3000
1	3000	1200	1800
2	1800		
3			
4			

Table 3.1

(i) Complete the remaining rows of **Table 3.1**. **[2]**

© OCR 2022

(ii) The decay graph has been started in **Fig. 3.1**. Complete the final three points on the graph using data from **Table 3.1**. **[2]**

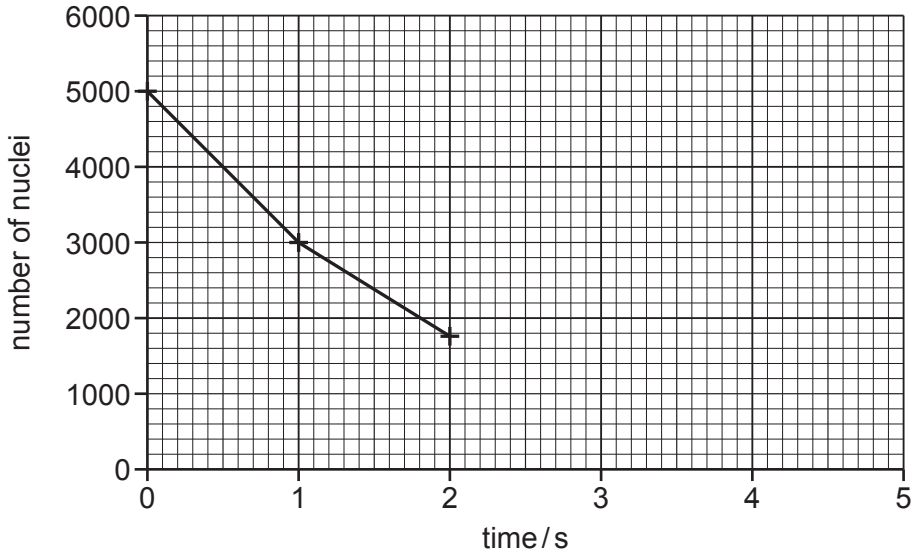

Fig. 3.1

(iii) How is the activity of the sample represented in this model?

.....

..... **[1]**

(iv) Explain why a better model is created if $\Delta t = 0.5\,\text{s}$.

.....

.....

..... **[2]**

© OCR 2022

(c) Protactinium-234 is a radioactive isotope which emits beta particles. It is produced in the school laboratory in a bottle containing a solution of a uranium compound. The bottle is shaken, and the protactinium-234 separates out into the top layer of solvent. The radiation is then detected using a Geiger-Muller tube connected to a counter.

The number of counts in consecutive 10-second intervals is recorded over a period of a few minutes. The **count rate** is found by correcting for the background count and then dividing this number of counts by ten.

(i) Explain why 10-second intervals over a period of a few minutes are suitable for this experiment.

.....

.....

..... **[2]**

(ii) **Fig. 3.2** shows a graph of ln(count rate) against *t* from this experiment.

Use the graph to find a value for the decay constant for protactinium-234 and hence the half-life.

Half-life = ...s **[4]**

© OCR 2022

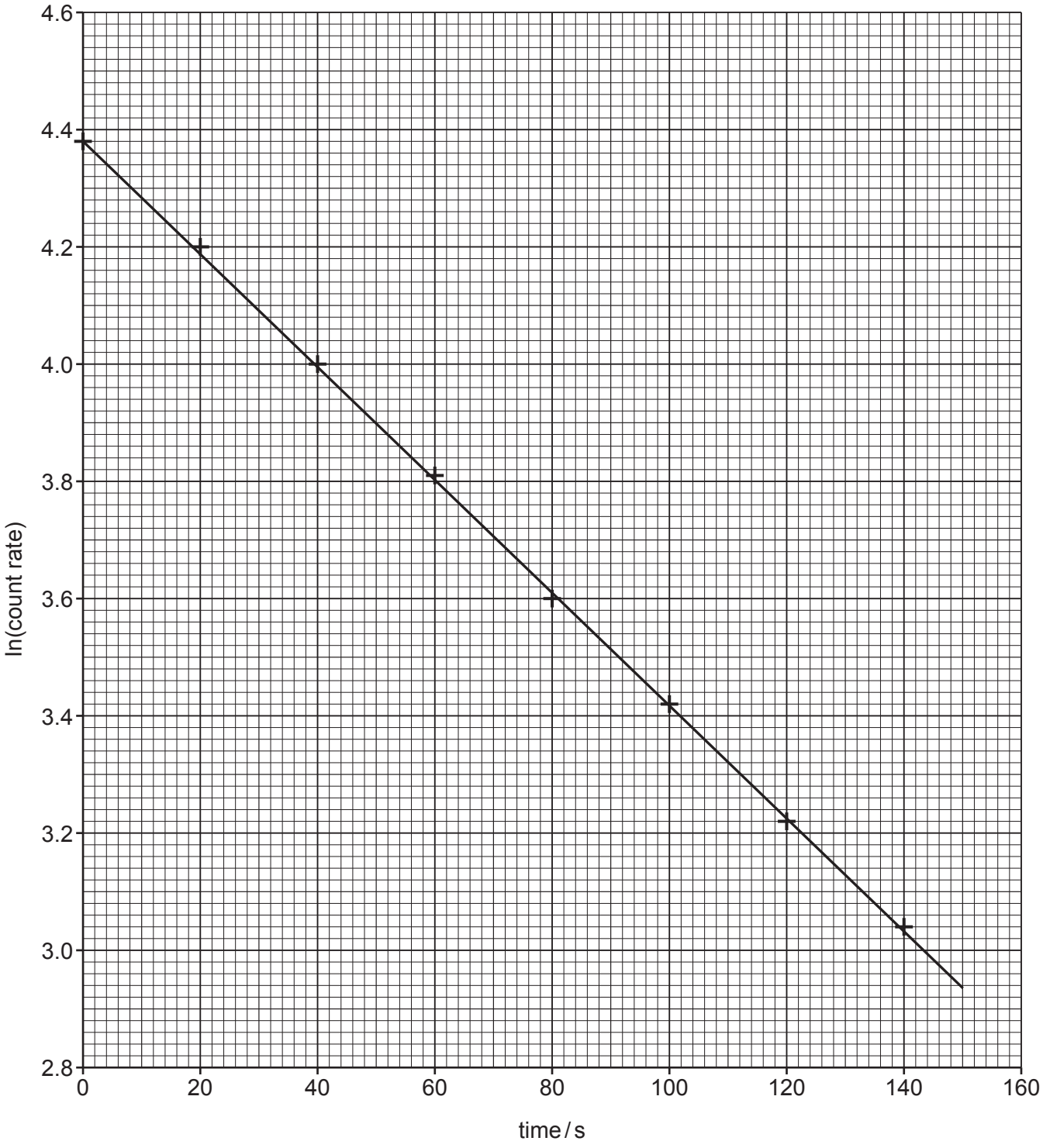

Fig. 3.2

© OCR 2022

SECTION B

Answer **all** the questions.

4 This question is about the behaviour of materials under tension. A student sets up an experiment to investigate the force–extension characteristics of a rubber band and obtains the data shown in **Fig. 4.1**.

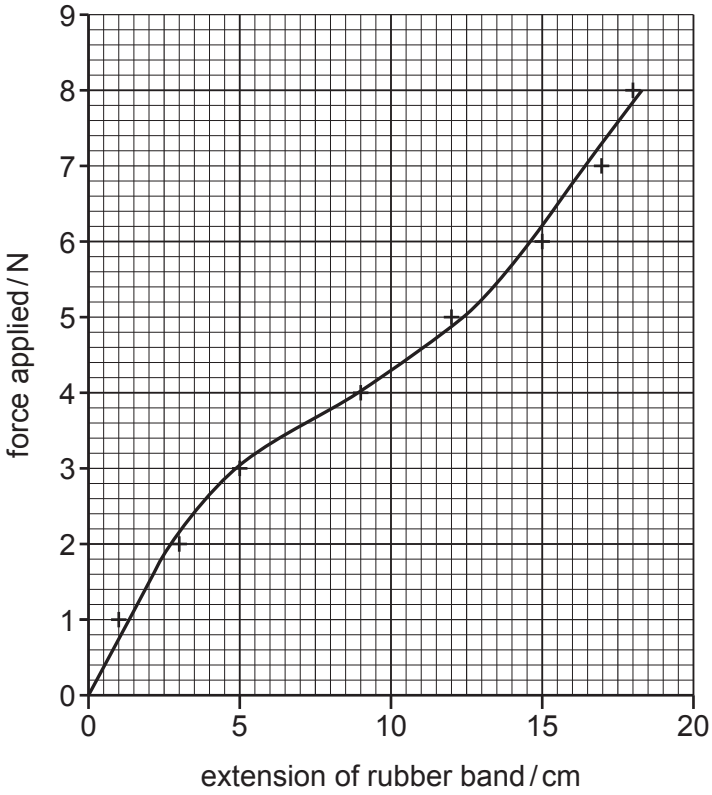

Fig. 4.1

(a) **(i)** Describe the experimental technique the student could use to gather reliable data. Include in your answer how BOTH experimental uncertainties and risks can be minimised. Suggest the greatest source of uncertainty in the experiment.

.....

.....

.....

.....

.....

..... **[4]**

© OCR 2022

(ii)* Describe the relationship shown by the graph in **Fig. 4.1** and explain how this relates to the behaviour of the band under tension and its microscopic structure. You may use diagrams in your answer.

.....

.....

.....

.....

.....

.....

.....

.....

.....

.....

.....

.....

.....

.....

.....

..... **[6]**

© OCR 2022

(b) Metals behave differently from rubber under tension. **Fig. 4.2** shows data the student collected whilst performing an experiment to extend a metal wire with diameter 0.5 mm, original length 4 m.

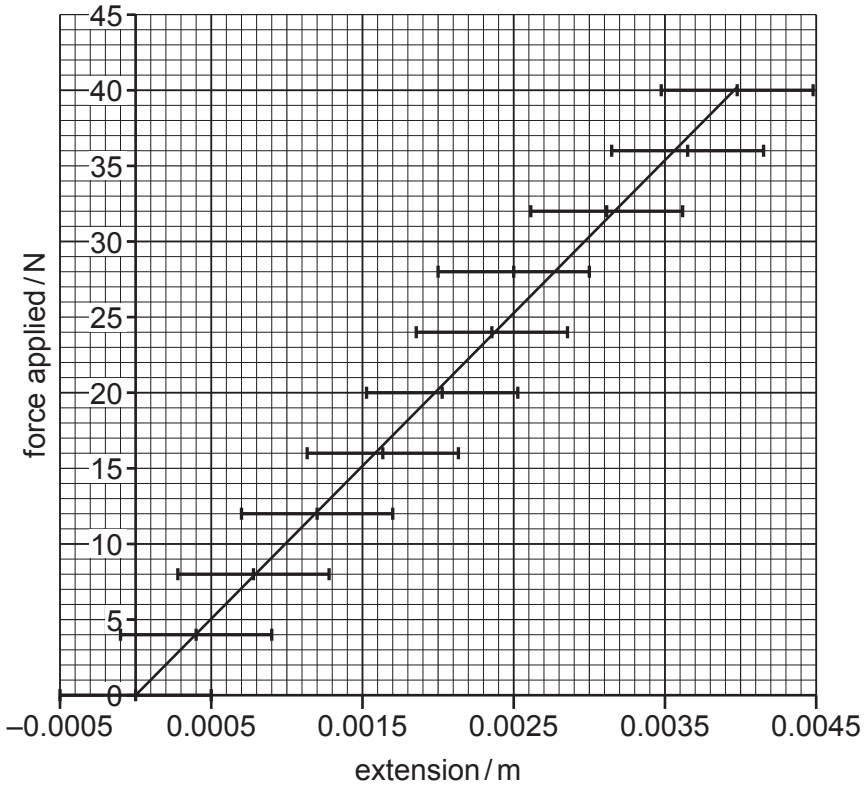

Fig. 4.2

(i) The line of best fit has been drawn on **Fig. 4.2**. Draw another line within the error bars shown, which has the greatest difference in gradient to the first line. **[1]**

© OCR 2022

(ii) The gradient of the line of best fit in **Fig. 4.2** is 10 100 NM^{-1}. Use this to calculate a value for the Young modulus of the wire. Use the line you have drawn to calculate its absolute uncertainty.

Young modulus = ... GPa ± ..... GPa **[3]**

Question 4(c) begins on page 16

© OCR 2022

(c) The diameter of the wire is measured with a screw-gauge micrometer, as shown in **Fig. 4.3**. The circumference of the rotating thimble is divided into 50 equal steps and for each full rotation of the thimble it moves a further 0.5 mm along the shaft.

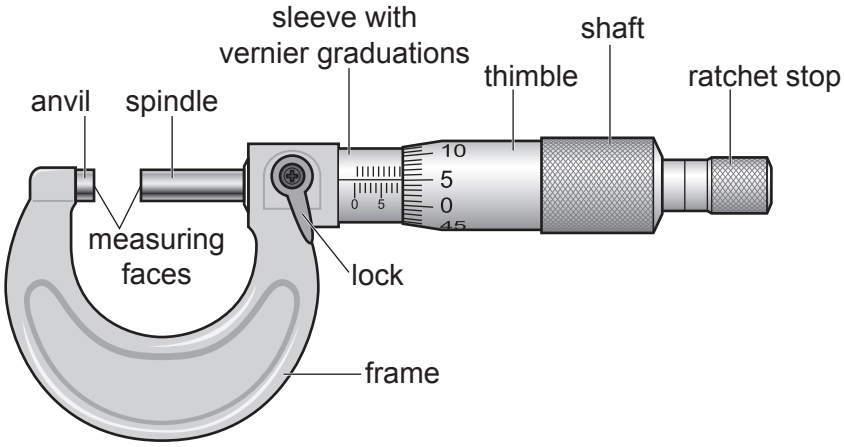

Fig. 4.3

(i) Give the resolution of the micrometer with the correct unit.

Resolution = ... unit ..... **[1]**

(ii) Suggest how the student could use multiple measurements to find the uncertainty of the diameter of the wire.

.....

.....

.....

..... **[2]**

(iii) The student measures the diameter of another wire to be 0.35 ± 0.02 mm.

Calculate the cross-sectional area of the wire along with the absolute uncertainty.

Area = ... m^2 ± ..... m^2 **[3]**

END OF QUESTION PAPER

© OCR 2022

ADDITIONAL ANSWER SPACE

If additional space is required, you should use the following lined page(s). The question number(s) must be clearly shown in the margin(s).

© OCR 2022

© OCR 2022

© OCR 2022

OCR
Oxford Cambridge and RSA

Copyright Information

OCR is committed to seeking permission to reproduce all third-party content that it uses in its assessment materials. OCR has attempted to identify and contact all copyright holders whose work is used in this paper. To avoid the issue of disclosure of answer-related information to candidates, all copyright acknowledgements are reproduced in the OCR Copyright Acknowledgements Booklet. This is produced for each series of examinations and is freely available to download from our public website (www.ocr.org.uk) after the live examination series.

If OCR has unwittingly failed to correctly acknowledge or clear any third-party content in this assessment material, OCR will be happy to correct its mistake at the earliest possible opportunity.

For queries or further information please contact The OCR Copyright Team, The Triangle Building, Shaftesbury Road, Cambridge CB2 8EA.

OCR is part of Cambridge University Press & Assessment, which is itself a department of the University of Cambridge.

© OCR 2022