Oxford Cambridge and RSA

Thursday 26 May 2022 – Afternoon

A Level Physics B (Advancing Physics)

H557/01 Fundamentals of Physics

Time allowed: 2 hours 15 minutes

You must have:
- the Data, Formulae and Relationships Booklet

You can use:
- a scientific or graphical calculator
- a ruler (cm/mm)

Please write clearly in black ink. **Do not write in the barcodes.**

Centre number | | | | | | Candidate number | | | | |

First name(s) _____

Last name _____

INSTRUCTIONS
- Use black ink. You can use an HB pencil, but only for graphs and diagrams.
- Write your answer to each question in the space provided. If you need extra space use the lined pages at the end of this booklet. The question numbers must be clearly shown.
- Answer **all** the questions.
- Where appropriate, your answer should be supported with working. Marks might be given for using a correct method, even if your answer is wrong.

INFORMATION
- The total mark for this paper is **110**.
- The marks for each question are shown in brackets **[ ]**.
- Quality of extended response will be assessed in questions marked with an asterisk (*).
- This document has **44** pages.

ADVICE
- Read each question carefully before you start your answer.

© OCR 2022 [601/4745/3]
DC (KN/FC) 310003/3
OCR is an exempt Charity

SECTION A

You should spend a maximum of 40 minutes on this section.

Write your answer for each question in the box provided.

Answer **all** the questions.

1 In an experiment to determine the focal length of a converging lens, a student sets up the apparatus shown in the diagram and observes a clear image on the screen.

What is the **largest** value of the focal length of the lens from the results?

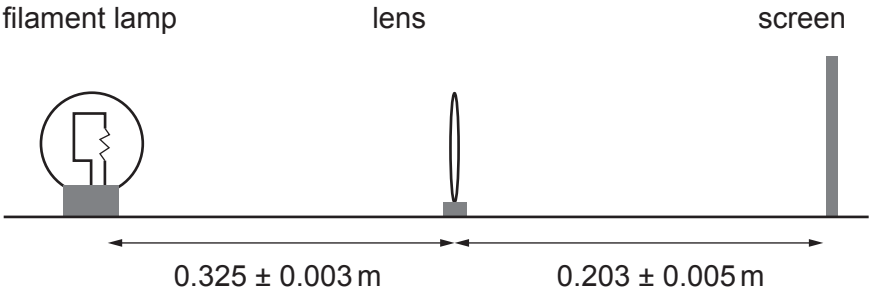

A 0.123 m

B 0.125 m

C 0.127 m

D 0.129 m

Your answer ☐ **[1]**

2 A light sensitive microchip in a camera has 3.2×10^9 pixels. Each pixel records intensity level with 12 bits.

How much information can be stored per image?

A 4096 Mbits

B 4.8 Gbytes

C 3.84 Gbytes

D 13100 Gbits

Your answer ☐ **[1]**

© OCR 2022

3 The diagram shows how the wavefronts and rays leave a converging lens.

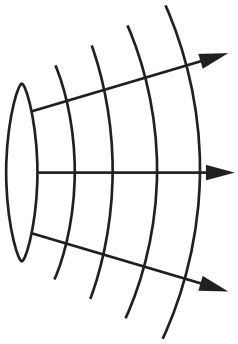

The focal length of the lens is *f* and the distance between the object that produced the waves and the lens is *d*.

Which statement is correct?

A *d* is less than *f*.

B *d* is equal to *f*.

C *d* is equal to 2*f*.

D *d* is far greater than *f*.

Your answer ☐ **[1]**

4 The variation of a signal without noise is 140 mV. The maximum number of useful bits to sample the same signal **with** noise is 3.

What is the noise variation in the signal?

A 18 mV

B 20 mV

C 47 mV

D 70 mV

Your answer ☐ **[1]**

© OCR 2022

5 A student is asked to construct a circuit to investigate the electrical characteristics of a resistor R. Which is the correct circuit?

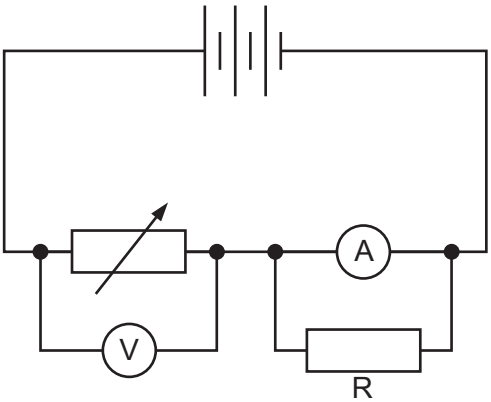

A

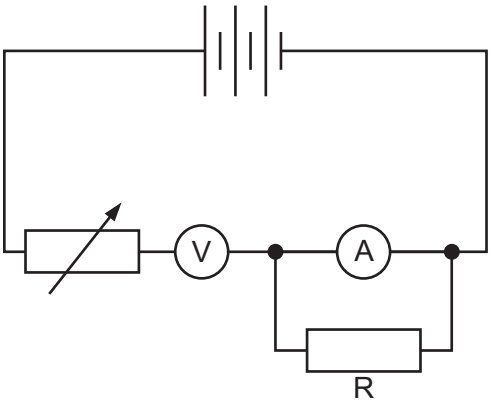

B

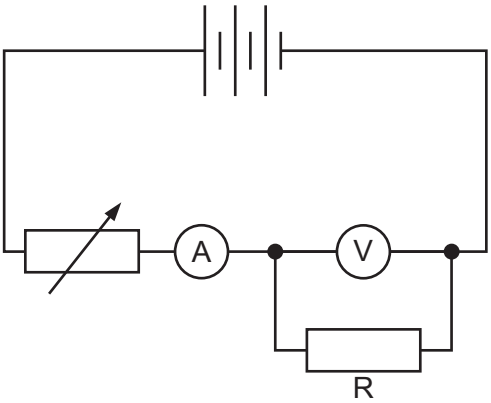

C

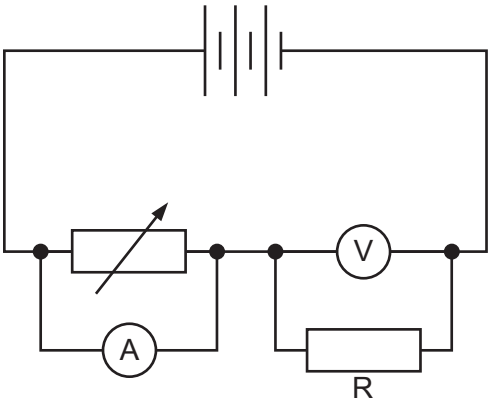

D

Your answer ☐ **[1]**

© OCR 2022

6 A block of mass m is dragged from point **A** to **B** against a constant frictional force F. What is the total work done in moving the block from **A** to **B**? The gravitational field strength is g.

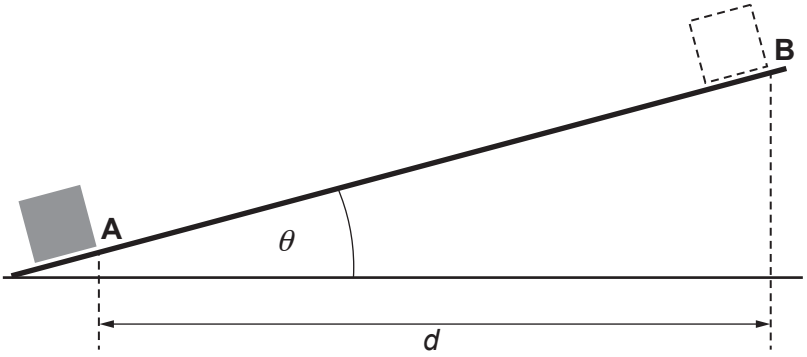

A $d(\frac{mg}{\sin\theta} + F\cos\theta)$

B $d(mg\tan\theta + \frac{F}{\cos\theta})$

C $d(\frac{mg}{\tan\theta} + \frac{F}{\sin\theta})$

D $d\tan\theta\,(mg + F)$

Your answer ☐ **[1]**

7 A sound signal with a highest frequency component of 8 kHz is digitised. The signal to noise ratio of the recording is 10^3.

Which row in the table below gives the correct number of bits per sample and the minimum number of samples per second needed to accurately reproduce the signal?

Row	Bits sample^{-1}	Minimum number of samples s^{-1}
A	10	8×10^3
B	10	1.6×10^4
C	10^3	8×10^3
D	10^3	1.6×10^4

Your answer ☐ **[1]**

© OCR 2022

The following information is for use in questions **8** and **9**.

8 The emf of the cell in the circuit shown is 2.7 V. The high resistance voltmeter reads 2.4 V.

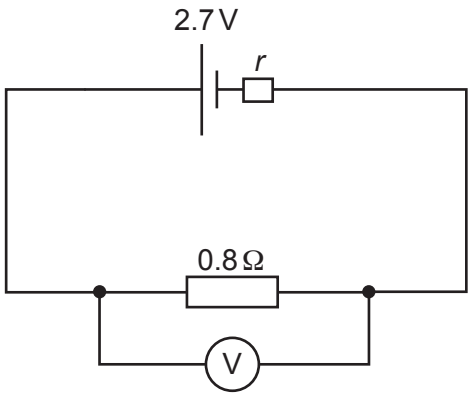

What is the internal resistance *r* of the cell?

A 0.1 Ω

B 0.3 Ω

C 1.6 Ω

D 1.9 Ω

Your answer ☐ **[1]**

9 What is the power transferred in the cell in the circuit shown?

A 0.1 W

B 0.9 W

C 8.1 W

D 9.1 W

Your answer ☐ **[1]**

© OCR 2022

10 The diagram shows a network of four conductors, each with conductance 0.2 S.

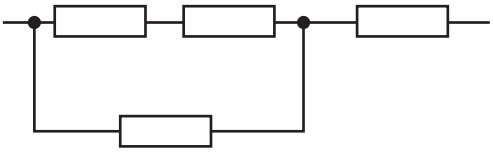

What is the total conductance of the arrangement?

A 0.12 S

B 0.27 S

C 0.30 S

D 0.53 S

Your answer ☐ **[1]**

11 A wire of original length 2.800 m is extended by 3 mm when a tensile force of 180 N is applied. The diameter of the wire is 1.2 mm.

What is the Young modulus of the material of the wire?

A 3.7×10^{10} Pa

B 1.2×10^{11} Pa

C 1.5×10^{11} Pa

D 4.7×10^{11} Pa

Your answer ☐ **[1]**

© OCR 2022

12 A sample of a radioisotope has initial activity = A_0.

What is its activity after 0.5 half-lives?

A $0.250\,A_0$

B $0.293\,A_0$

C $0.707\,A_0$

D $0.750\,A_0$

Your answer ☐ **[1]**

13 Muons are subatomic particles with a decay constant of $4.4 \times 10^5\,\text{s}^{-1}$ when at rest.
A muon is travelling at a relative speed of $2.94 \times 10^8\,\text{m}\,\text{s}^{-1}$.

What is its observed half-life?

A 1.5 μs

B 2.2 μs

C 7.9 μs

D 11.4 μs

Your answer ☐ **[1]**

14 A mass is hung from a spring and oscillates at the same frequency as a simple pendulum of length 1.0 m.

What mass is hung from the spring?

The spring has a spring constant $k = 50\,\text{N}\,\text{m}^{-1}$.

A 0.13 kg

B 0.52 kg

C 5.1 kg

D 16.0 kg

Your answer ☐ **[1]**

© OCR 2022

15 Which relationship can be correctly represented by the graph shown?

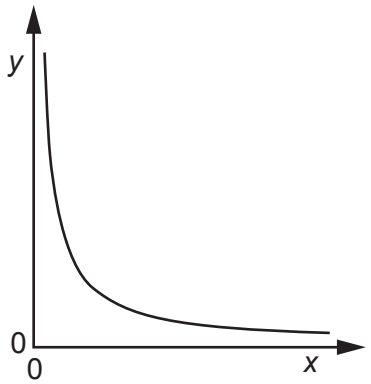

	***x* axis**	***y* axis**
A	mass of gas in a constant volume at constant temperature	pressure
B	pressure of an ideal gas at constant temperature	volume of gas
C	time	activity of a radioisotope
D	velocity of a mass	kinetic energy of the mass

Your answer ☐ **[1]**

16 The activation energy required to remove an electron from a filament is 9.00×10^{-20} J.
What temperature will produce a Boltzmann factor of 0.0100 for this process?

A 1140 K

B 1420 K

C 1690 K

D 6520 K

Your answer ☐ **[1]**

© OCR 2022

17 The diagram shows the path of an alpha particle of energy E deflecting near a nucleus.

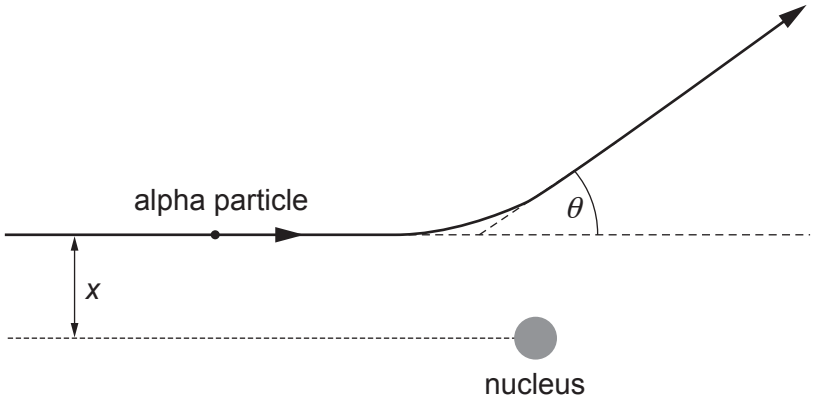

Which change will **reduce** the deflection angle θ?

A decrease the distance x

B increase the energy E of the alpha particle

C increase the charge on the nucleus

D replace the alpha particle with a proton of the same energy E

Your answer ☐ **[1]**

18 A proton is accelerated through 12.4 kV and makes a direct collision with a silver ($^{107}_{47}Ag$) nucleus. What is the closest distance the proton can approach the nucleus?

A 5.5×10^{-15} m

B 1.24×10^{-14} m

C 5.4×10^{-12} m

D 1.24×10^{-11} m

Your answer ☐ **[1]**

© OCR 2022

The following diagrams are for use in questions **19** and **20**.

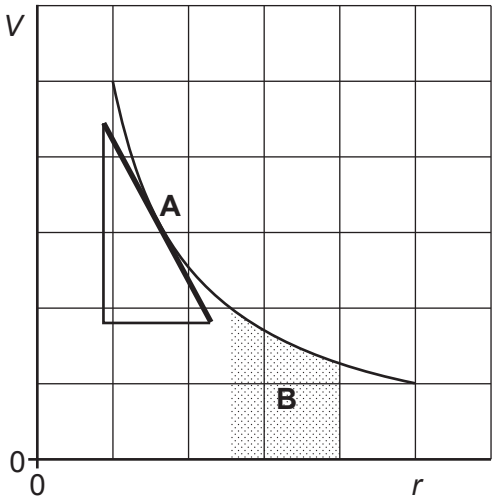

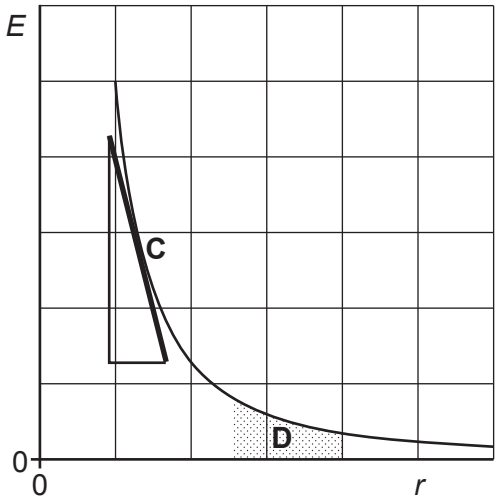

Two graphs are shown, the variation of electrical potential *V* with radial distance *r* from a point charge and the variation of electrical field strength *E* with radial distance *r* from a point charge.

Four features are highlighted, gradient **A**, area **B**, gradient **C** and area **D**.

19 Which feature represents the magnitude of electrical field strength at a point?

Your answer ☐ **[1]**

20 Which feature represents a change in electrical potential between two points?

Your answer ☐ **[1]**

© OCR 2022

21 An alpha particle source of activity 1.8×10^3 Bq is implanted into 25 g of tissue.

What is the effective dose transferred to the tissue in a 48 hour period?

Assume that the activity does not change over the 48 hour period.

Energy of alpha particles from source = 8.0×10^{-13} J

Quality factor of alpha radiation = 20

A 55 μSv

B 200 μSv

C 3.3 mSv

D 200 mSv

Your answer ☐ **[1]**

22 A radioactive source has a half-life of 27 days. The initial activity of the source is determined to be 2.5×10^4 Bq.

How long will it take for the activity to drop to 1.0×10^4 Bq?

A 32.4 days

B 34.2 days

C 35.7 days

D 36.9 days

Your answer ☐ **[1]**

© OCR 2022

The following information is used for questions **23** and **24**.

The end of a metal strip oscillates in simple harmonic motion.
The amplitude of the motion = 0.020 m. The frequency of the oscillation is 15 Hz.

23 What is the magnitude of the maximum acceleration of the end of the strip?

A $1.8\,\mathrm{m\,s^{-2}}$

B $4.5\,\mathrm{m\,s^{-2}}$

C $28\,\mathrm{m\,s^{-2}}$

D $180\,\mathrm{m\,s^{-2}}$

Your answer ☐ **[1]**

24 When the strip oscillates at an amplitude of 0.020 m the maximum velocity at the end of the strip is v.

What is its maximum velocity when the amplitude is increased to 0.040 m?

A v

B $\sqrt{2} \times v$

C $2 \times v$

D $4 \times v$

Your answer ☐ **[1]**

25 The decay equation of strontium-90 is:

$$^{90}_{38}\mathrm{Sr} \longrightarrow {}^{90}_{39}\mathrm{Y} + {}^{0}_{-1}\mathrm{e} + {}^{0}_{0}\bar{\nu}.$$

Which of the following quantities is **not** conserved in the decay?

A charge

B lepton number

C momentum

D mass

Your answer ☐ **[1]**

© OCR 2022

26 The diagram shows a point **X** at displacement r from a single point charge $+q$. The electric field strength at **X** is E.

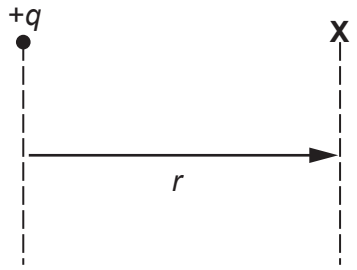

A charge of $-2q$ is brought to the same displacement r from **X** as shown. The two charges are separated by a displacement of $2r$.

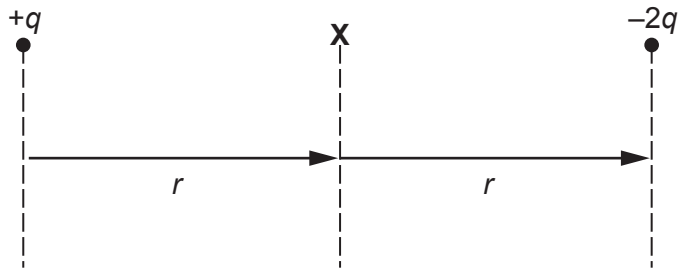

What is the field strength at **X** when the two charges are present?

A $+E$

B $+3E$

C $-E$

D $-3E$

Your answer ☐ **[1]**

© OCR 2022

The following diagram is used in questions **27** and **28**.

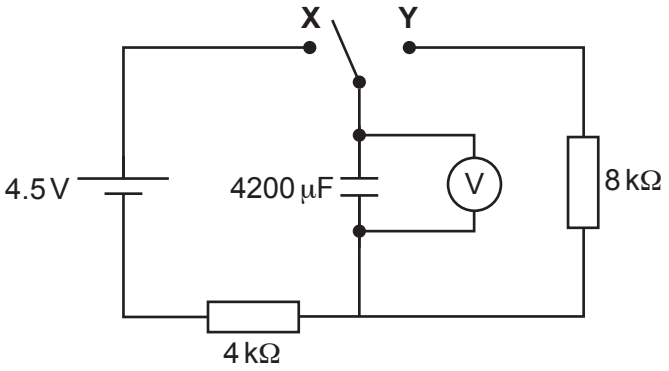

27 The capacitor in the circuit shown is initially uncharged. At time $t = 0$ s, the switch is moved to position **X**.

What is the potential difference across the capacitor after 10 s?

A 0.27 V

B 1.7 V

C 2.0 V

D 2.3 V

Your answer ☐ **[1]**

28 When the capacitor is fully charged, the switch is moved to position **Y**.

What is the energy stored on the capacitor after 10 s of discharge?

A 0.013 J

B 0.023 J

C 0.026 J

D 0.046 J

Your answer ☐ **[1]**

© OCR 2022

29 Here are some data about an ideal transformer:

input power: 36 W
primary current: 4.8 A
number of turns on primary coil: 2000
secondary voltage: 60 V

What is the number of turns on the secondary coil?

A 1200

B 3300

C 16 000

D 25 000

Your answer ☐ **[1]**

30 The diagram shows some of the energy levels of a hydrogen atom.

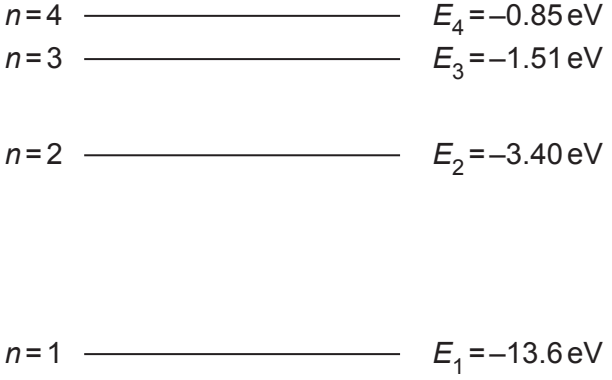

A photon of frequency 2.92×10^{15} Hz is absorbed by the atom.

This results in an electron transition between which two energy levels?

A $n = 1$ to $n = 2$

B $n = 1$ to $n = 3$

C $n = 2$ to $n = 3$

D $n = 2$ to $n = 4$

Your answer ☐ **[1]**

© OCR 2022

SECTION B

Answer **all** the questions.

31 The diagram shows gravitational equipotentials near the surface of the Moon.

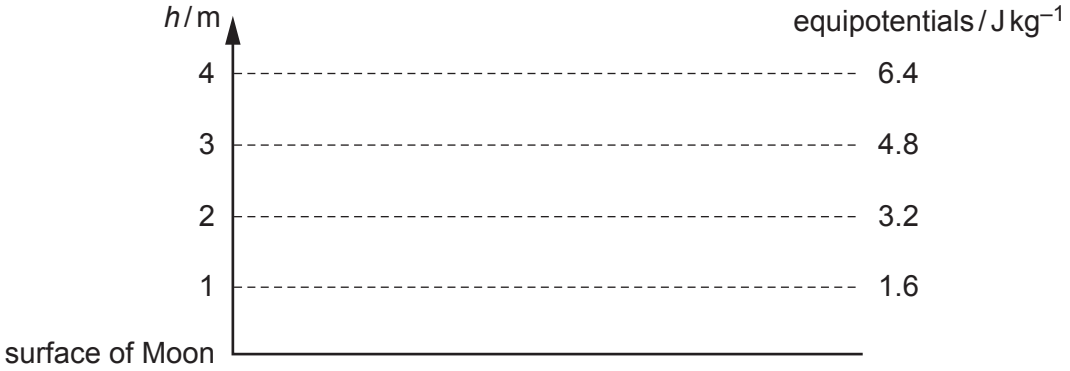

(a) How does the diagram show that the gravitational field is uniform on this scale?

.....

..... **[1]**

(b) Calculate the maximum height reached by a projectile that is launched from the surface of the Moon with a vertical velocity of $20.0\,\mathrm{m\,s^{-1}}$. State any assumptions that you make.

Assumptions:

.....

.....

maximum height = ... m **[2]**

© OCR 2022

32 **Fig. 32.1** shows plane waves diffracted when they pass through a slit.

(a) Complete **Fig. 32.2** to show diffraction of waves of the same wavelength through a narrower slit.

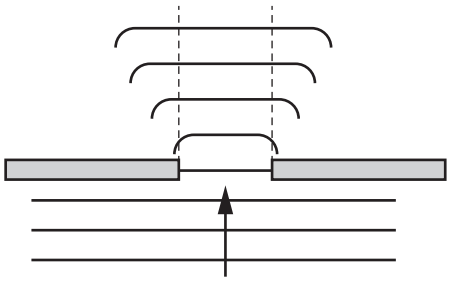

Fig. 32.1

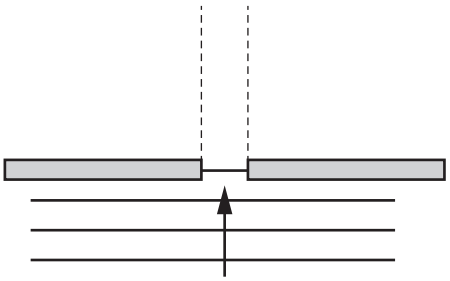

Fig. 32.2

[2]

(b) **Fig. 32.3** shows wavefronts after passing through a grating of many narrow slits.

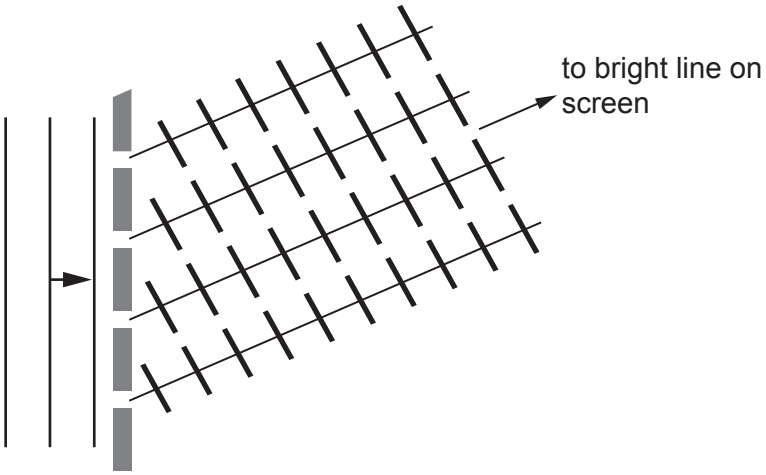

Fig. 32.3

Use the diagram to explain why there is a bright line on the screen in the direction shown.

.....

.....

.....

..... **[2]**

© OCR 2022

33 A spacecraft is tracked by radar from Earth. Radar pulses are sent at intervals of precisely 1800.00 s. The time intervals for the signal to travel from the Earth to the spacecraft and back (journey time) are given below:

Time pulse sent / s	**Journey time / s**	
00.00	3335.564	
1800.00	3335.586	

Estimate the velocity at which the spacecraft is moving away from Earth. You may use the third column of the table for working.

State the relativistic principle your calculation relies upon.

Relativistic principle: .....

.....

velocity = ... $m\,s^{-1}$

[4]

© OCR 2022

34 **Fig. 34.1** shows the relationship between charge *Q* on a capacitor and the p.d. *V* across the capacitor.

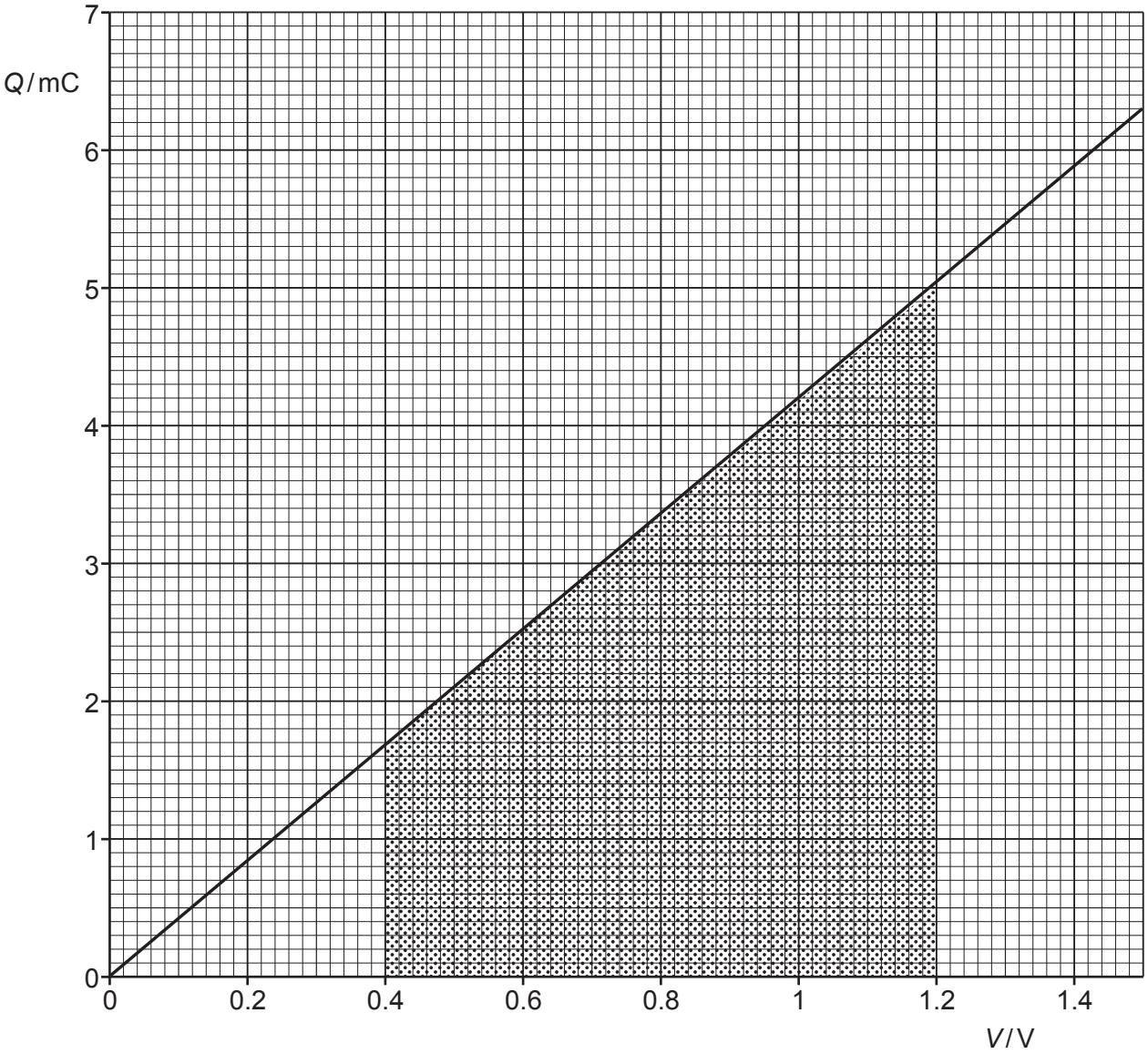

Fig. 34.1

(a) Explain the significance of the shaded area of the graph and the significance of the gradient of the graph. Link your explanations to the relevant equations.

Shaded area: .....

.....

.....

.....

Gradient: .....

.....

.....

[3]

© OCR 2022

(b) A simplified circuit is shown in **Fig. 34.2**.

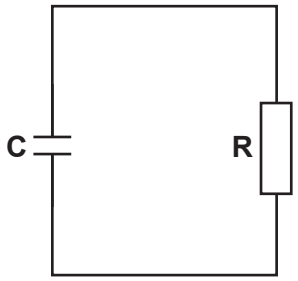

Fig. 34.2

Explain how the equation $\frac{\Delta Q}{\Delta t} = -\frac{Q}{RC}$ can be used to find the charge remaining on the capacitor after time t by performing repeated calculations or iterations. You may include a diagram in your answer.

.....

.....

.....

.....

.....

..... **[3]**

© OCR 2022

35 The table shows the variation of electric field strength with the distance from the centre of a charged conducting sphere of radius 0.05 m.

Distance from centre of sphere / m	**Electric field strength / N C^{-1}**
0.20	5.6×10^5
0.30	2.5×10^5
0.40	1.4×10^5

(a) Use the data in the table to show that

$$\text{electric field strength} \propto \frac{1}{(\text{distance from centre of charge})^2}$$

Explain your method.

Explanation: .....

.....

.....

[2]

© OCR 2022

(b) Explain why the electric potential due to the charged sphere decreases more gradually with distance from the sphere than the decrease of electric field strength with distance from the sphere. Include an arithmetical example in your explanation.

.....

.....

.....

Example:

[2]

© OCR 2022

SECTION C

Answer **all** the questions.

36 In 1690, the Dutch thinker Christiaan Huygens suggested a wave model of light. **Fig. 36.1** is a simplified version of one of Huygens' diagrams that explains the refraction of light using his wave model. The speed of the waves c_1 in medium 1 is lower than the speed c_2 in medium 2.

Fig. 36.1 shows two successive wavefronts entering medium 2 from medium 1. Wavefront BB' strikes the boundary time Δt **after** wavefront AA'. In time Δt, the wavefront travels distance $c_1\ \Delta t$ in medium 1 and the smaller distance $c_2\ \Delta t$ in medium 2. **Fig 36.2** represents the same situation as a ray diagram.

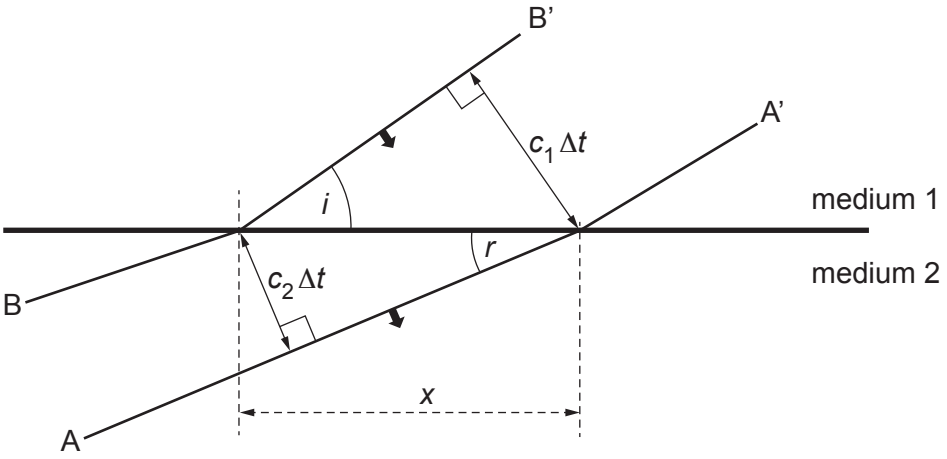

Fig. 36.1

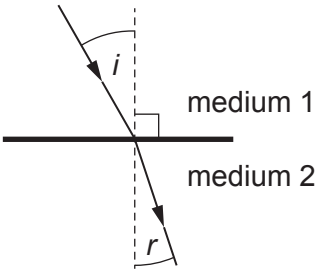

Fig. 36.2

(a) Use information from the diagrams to show that $\frac{\sin i}{\sin r} = \frac{c_1}{c_2}$.

[1]

© OCR 2022

(b) A beam of monochromatic light is incident on the side of a glass cube containing water. Use **Fig. 36.3** and the data given to calculate the angle of refraction in the water, r_w.

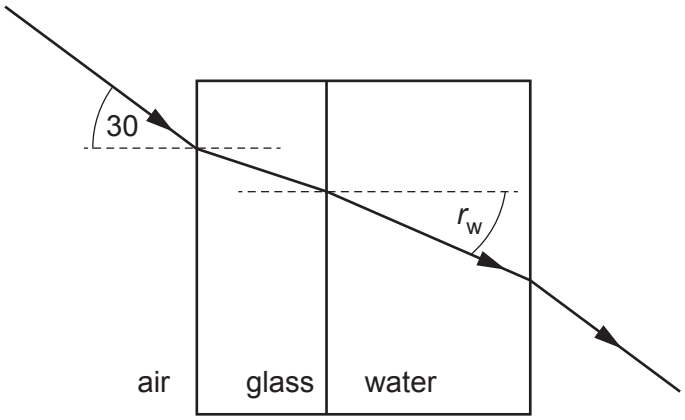

Fig. 36.3 not to scale

Angle of incidence = 30°

$c_{air} = 3.00 \times 10^8\,m\,s^{-1}$

$c_{glass} = 1.99 \times 10^8\,m\,s^{-1}$

$c_{water} = 2.26 \times 10^8\,m\,s^{-1}$

angle of refraction in water = ... °

[2]

© OCR 2022

(c) A student determines the refractive index using the apparatus shown in **Fig. 36.4**.

A graph of the experimental results is shown in **Fig. 36.5**.

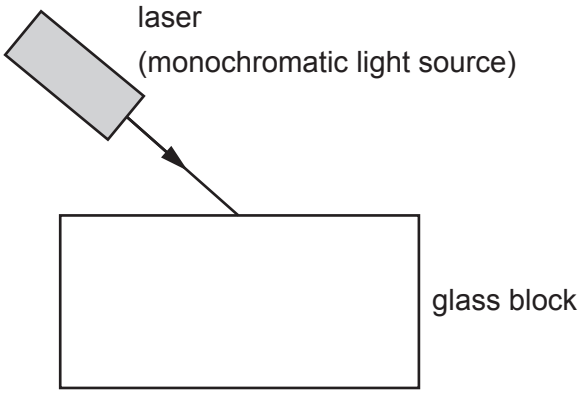

Fig. 36.4

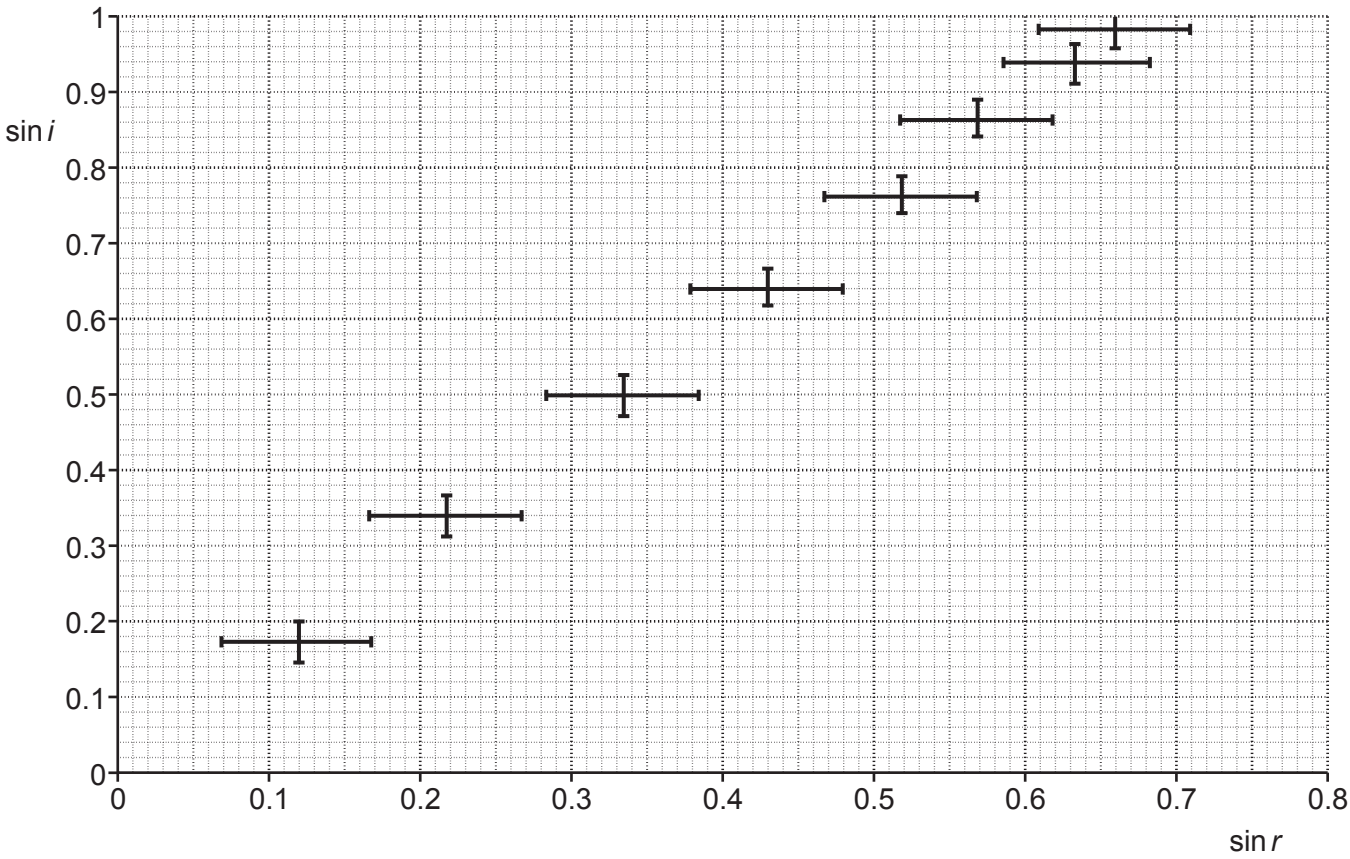

Fig. 36.5

© OCR 2022

(i) Suggest why a monochromatic light source is used in the experiment.

.....

..... **[1]**

(ii) Suggest why the student estimated the uncertainty in sin *r* to be greater than the uncertainty in sin *i*.

.....

..... **[1]**

(iii) The student assumed a constant uncertainty in the sines of the angle. Suggest and explain why this is unlikely to be the case.

.....

.....

..... **[2]**

(iv) The student calculated the value of the refractive index as 1.5.

Use the graph to estimate a value for the uncertainty in the result.

Explain your method.

refractive index of the glass block = 1.5 ± .....

Explanation: .....

.....

.....
[3]

© OCR 2022

37 This question is about Japanese 'Shinkansen' or bullet trains such as the one shown in **Fig. 37.1**.

Fig. 37.1

(a) Ignore any frictional forces in part **(a)** of the question.

(i) A bullet train without passengers has a uniform acceleration of $1.9\,\text{km}\,\text{h}^{-1}\,\text{s}^{-1}$. Show that it will take about 160 s for the train to reach its top speed of 300 km / h.

[1]

(ii) Calculate the average power delivered by the engine during the acceleration.

mass of train without passengers = 7.15×10^5 kg

power = ... W **[2]**

© OCR 2022

(b) The drag force F_D on this train due to the air is given by the relationship

$$F_D = \frac{1}{2}\rho C_D A v^2$$

where:
v is the speed of the train
C_D is the drag coefficient = 1.5
ρ is the density of air = $1.2\,\text{kg}\,\text{m}^{-3}$
A is the cross-sectional area of the face of the train = $13.5\,\text{m}^2$

(i) Calculate the power required for the train to maintain a speed of 300 km / h against the drag force.

power = ... W **[2]**

© OCR 2022

(ii)* The mass of the bullet train without passengers is 7.15×10^5 kg. When all the carriages are full it carries 1300 passengers.

Assuming that the accelerating force is constant, compare the initial acceleration of the train full of passengers with the acceleration of $1.9\,\text{km}\,\text{h}^{-1}\,\text{s}^{-1}$ of the empty train. Make all your estimates clear.

Describe and explain how carrying passengers will affect the power required to maintain a speed of 300 km / h against the drag force from the air and suggest and explain how passing through a narrow tunnel might change the power required to maintain speed.

.....

.....

.....

.....

.....

.....

.....

.....

.....

.....

.....

.....

.....

.....

..... **[6]**

Additional answer space if required:

.....

.....

.....

.....

.....

.....

.....

.....

© OCR 2022

BLANK PAGE

PLEASE DO NOT WRITE ON THIS PAGE

© OCR 2022

38 This question is about the relationship between the volume *V* of a fixed mass of gas at constant pressure and the absolute temperature *T* of the gas. The relationship is often called Charles' Law.

(a)* Describe how you can use the apparatus shown in **Fig. 38.1** to determine a value for absolute zero (0 K) in degrees Celsius. Explain why it is necessary to assume that the diameter of the bore of the capillary tube is constant throughout its length.

Describe the sources of uncertainty in the experiment and explain how they can be reduced. Suggest why trapped air will not give an accurate value of absolute zero.

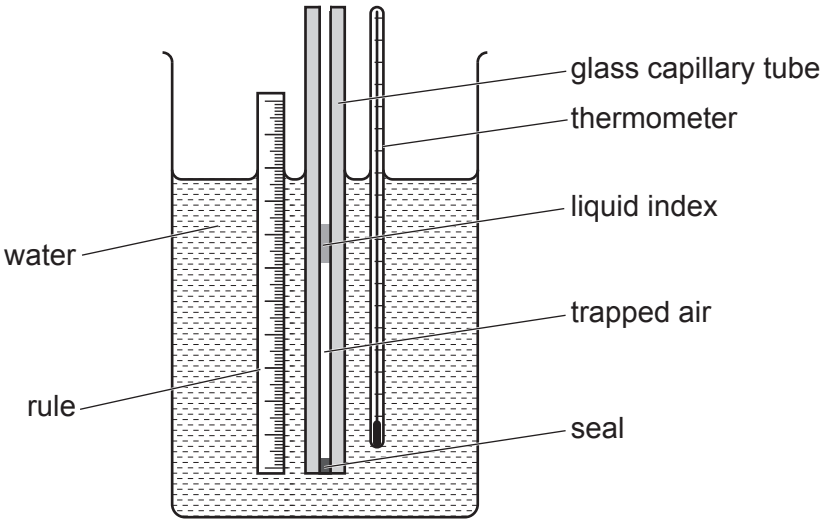

Fig. 38.1

.....

.....

.....

.....

.....

.....

.....

.....

.....

.....

.....

.....

.....

..... **[6]**

© OCR 2022

Additional answer space if required:

.....

.....

.....

.....

.....

.....

.....

(b) 0.24 mol of gas is contained in a cylinder as represented in **Fig. 38.2**. The gas is trapped by a disc of negligible mass so that the pressure in the cylinder is equal to the atmospheric pressure outside the cylinder. The disc can move up and down the cylinder without friction.

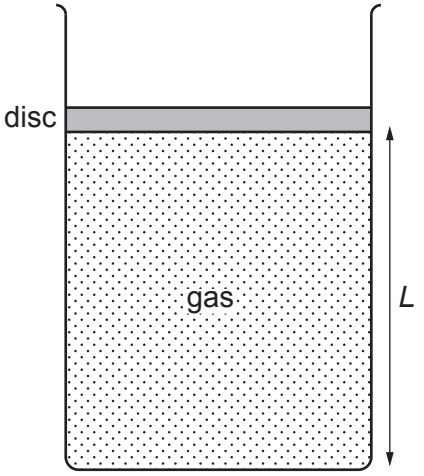

Data:

cross-sectional area of cylinder = $5.0 \times 10^{-3}\,m^3$

number of moles of gas in cylinder = 0.24 mol

temperature of gas in cylinder = 298 K

atmospheric pressure = 1.0×10^5 Pa

Fig. 38.2 not to scale

(i) Use the data given to show that length *L* is approximately 1.2 m. Assume ideal gas behaviour.

Explain your reasoning.

Explanation: .....

.....

.....

[3]

© OCR 2022

(ii) Use the kinetic model of ideal gas behaviour to explain why length *L* increases when the temperature of the trapped gas increases without change in atmospheric pressure.

.....

.....

.....

.....

.....

.....

.....

.....

..... **[3]**

(iii) The temperature of the gas inside the cylinder is raised and length *L* increases to 1.8 m. Atmospheric pressure remains at 1.0×10^5 Pa.

Calculate the r.m.s. speed of the trapped gas particles at the raised temperature.

mean mass of gas particle = 6.6×10^{-26} kg.

r.m.s. speed = ... $m\,s^{-1}$ **[3]**

© OCR 2022

BLANK PAGE

PLEASE DO NOT WRITE ON THIS PAGE

© OCR 2022

39 This question is about a possible method of extracting energy by nuclear fission of a uranium 234 nucleus.

(a) Explain what is meant by the 'binding energy' of a nucleus and describe how its value can be calculated from the mass of the nucleus and the values for the masses of the individual unbound protons and neutrons.

.....

.....

.....

..... **[2]**

(b) **Fig. 39.1** shows how the binding energy **per nucleon** varies with nucleon number.

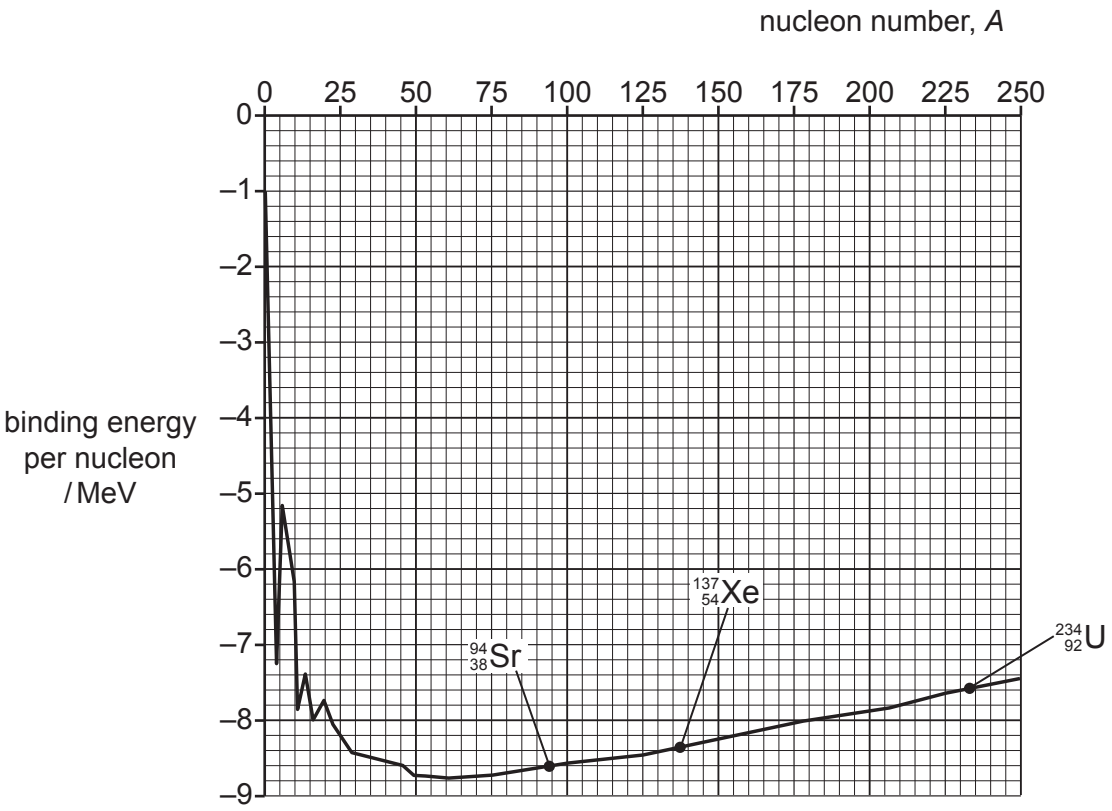

Fig. 39.1

© OCR 2022

(i) The fission reaction is

$$^{234}_{92}U \longrightarrow {}^{137}_{54}Xe + {}^{94}_{38}Sr + 3\,{}^{1}_{0}n$$

The binding energy of the U-234 nucleus is –1778 MeV.

Use the graph to show that the energy released in the fission reaction is about 200 MeV.

[2]

(ii) Calculate the mass of $^{234}_{92}U$ that must undergo fission to produce a constant output of 1400 MW for one year.

mass of $^{234}_{92}U$ atom = 3.89×10^{-25} kg.

1 year = 3.2×10^{7} s.

mass = ... kg **[2]**

© OCR 2022

(c) In a 'thorium' reactor, $^{234}_{92}U$ is produced when a neutron is captured by a $^{233}_{92}U$ nucleus.

The $^{233}_{92}U$ is produced from an isotope of thorium (Th) in the following stages

$$^{232}_{90}Th + ^{1}_{0}n \longrightarrow ^{233}_{90}Th \longrightarrow ^{233}_{91}Pa + ^{0}_{-1}e \longrightarrow ^{233}_{92}U + ^{0}_{-1}e.$$

Calculate the minimum mass of $^{233}_{91}Pa$ required to produce sufficient $^{234}_{92}U$ to produce an energy output of 1400 MJ in one second.

Explain why this is a minimum value.

half-life of $^{233}_{91}Pa$ = 1600 s.

mass of $^{233}_{91}Pa$ atom = 3.87×10^{-25} kg.

mass = ... kg

Explanation:

.....

.....

.....

[4]

© OCR 2022

40 This question is about the quantum behaviour of electrons. In 1989, Akira Tonumura and colleagues performed an experiment in Japan. Electrons were accelerated through 50 kV and passed through two gaps separated by about 1 μm (**Fig. 40.1**).

Fig. 40.1 Principle of the Tonumura experiment – not to scale

Only **one electron** passed through the apparatus at any time. As the electrons hit the detecting screen a pattern gradually emerged as shown in **Fig. 40.2**.

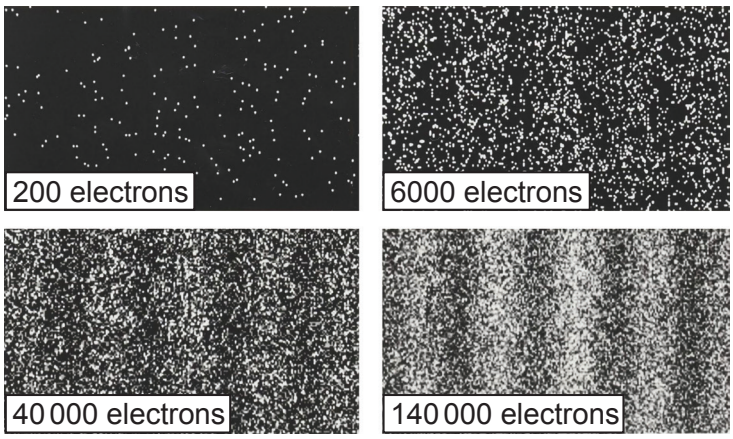

Fig. 40.2 Pattern of electrons on the detecting screen

(a) Explain how this experiment demonstrates that electrons show wave-like and particle-like properties.

.....

.....

.....

.....

.....

..... **[2]**

© OCR 2022

(b) **Fig. 40.3** represents the amplitudes of phasors of electrons from the two gaps superposing at points **A** and **B**.

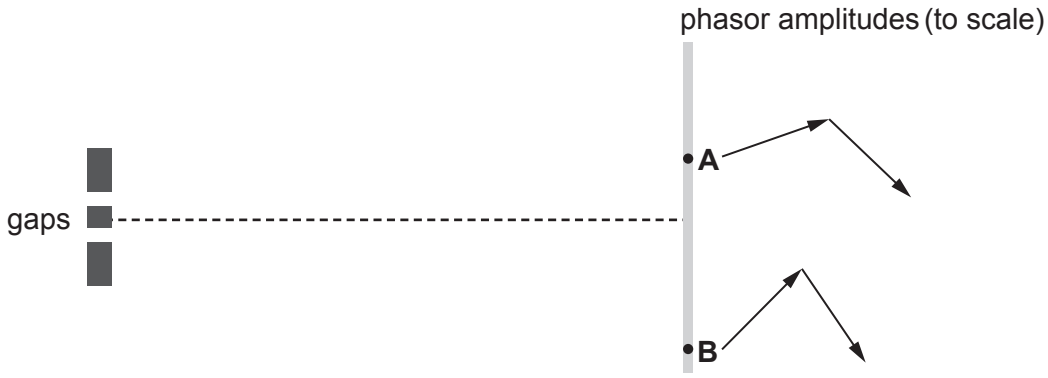

Fig. 40.3

(i) Carefully draw the resultant phasors on **Fig. 40.3** for points **A** and **B**. **[2]**

(ii) The probability of an electron arriving at a given point is proportional to the square of the resultant phasor amplitude at that point.

Use measurements from the diagram to calculate how much more likely an electron will arrive at point **A** compared to point **B**. This is the relative probability of arriving at **A** compared to **B**.

relative probability = ... **[2]**

© OCR 2022

(c) Relativistic effects need to be considered for an electron accelerated through 50 kV.

(i) Calculate the de Broglie wavelength of the accelerated electron.
Assume that the relativistic momentum of the electron accelerated through 50 kV is 1.2×10^{-22} kg m s^{-1}.

Use this value to calculate the angle between the central maximum and the first order maximum of the diffraction pattern for electrons accelerated through 50 kV which pass through two gaps separated by 1.0×10^{-6} m (1 μm).

de Broglie wavelength = ... m

angle to first order maximum = ... °

[3]

(ii) Show that the velocity of an electron accelerated through 50 kV is about 1.2×10^{8} m s^{-1}.

[4]

END OF QUESTION PAPER

© OCR 2022

ADDITIONAL ANSWER SPACE

If additional space is required, you should use the following lined page(s). The question number(s) must be clearly shown in the margin(s).

© OCR 2022

© OCR 2022

OCR
Oxford Cambridge and RSA

Copyright Information

OCR is committed to seeking permission to reproduce all third-party content that it uses in its assessment materials. OCR has attempted to identify and contact all copyright holders whose work is used in this paper. To avoid the issue of disclosure of answer-related information to candidates, all copyright acknowledgements are reproduced in the OCR Copyright Acknowledgements Booklet. This is produced for each series of examinations and is freely available to download from our public website (www.ocr.org.uk) after the live examination series.

If OCR has unwittingly failed to correctly acknowledge or clear any third-party content in this assessment material, OCR will be happy to correct its mistake at the earliest possible opportunity.

For queries or further information please contact The OCR Copyright Team, The Triangle Building, Shaftesbury Road, Cambridge CB2 8EA.

OCR is part of Cambridge University Press & Assessment, which is itself a department of the University of Cambridge.

© OCR 2022