OCR
Oxford Cambridge and RSA

Monday 20 May 2019 – Afternoon

A Level Physics B (Advancing Physics)

H557/01 Fundamentals of Physics

Time allowed: 2 hours 15 minutes

You must have:
- The Data, Formulae and Relationships Booklet (sent with general stationery)

You may use:
- a scientific or graphical calculator
- a ruler (cm/mm)

Please write clearly in black ink. **Do not write in the barcodes.**

Centre number | | | | | | Candidate number | | | | |

First name(s) _____

Last name *StemUp Model Solution*

INSTRUCTIONS
- Use black ink. You may use an HB pencil for graphs and diagrams.
- Answer **all** the questions.
- Where appropriate, your answers should be supported with working. Marks may be given for a correct method even if the answer is incorrect.
- Write your answer to each question in the space provided. If additional space is required, use the lined page(s) at the end of this booklet. The question number(s) must be clearly shown.

INFORMATION
- The total mark for this paper is **110**.
- The marks for each question are shown in brackets **[ ]**.
- Quality of extended responses will be assessed in questions marked with an asterisk (*).
- This document consists of **44** pages.

© OCR 2019 [601/4745/3]
DC (ST/JG) 173704/6
OCR is an exempt Charity

stemup.co.uk

SECTION A

You should spend a maximum of 40 minutes on this section.

Write your answer for each question in the box provided.

Answer **all** the questions.

1 The unit of electrical conductance is the siemens S, 1 S is the same as

A $1\,J\,C^{-1}$

B $1\,A\,V^{-1}$

C $1\,C\,V^{-1}$

D $1\,\Omega^{-1}\,m^{-1}$

Your answer B **[1]**

2 Which quantity is followed by a reasonable estimate of its order of magnitude?

A	momentum of a bee in flight	$10^{0}\,kg\,m\,s^{-1}$
B	speed of an air molecule at room temperature	$10^{6}\,m\,s^{-1}$
C	wavelength of red light	$10^{-6}\,m$
D	wavelength of X-rays	$10^{-15}\,m$

Your answer C **[1]**

© OCR 2019

The following information is for use in questions **3** and **4**.

The stress–strain graphs for four different materials are shown.

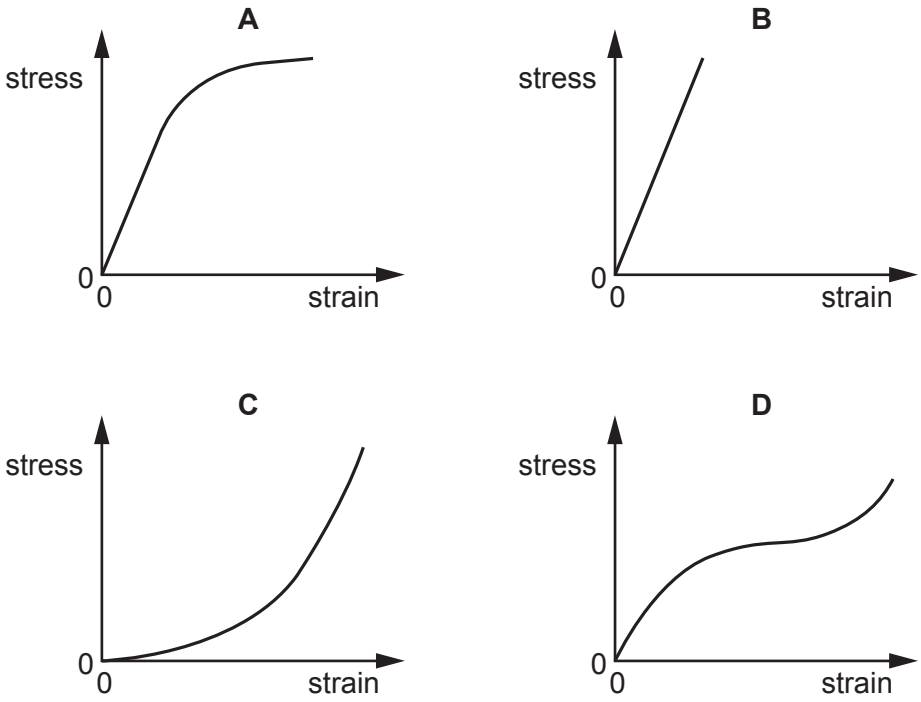

3 Which diagram shows the stress–strain graph for a ductile metal?

Your answer A **[1]**

4 Which diagram shows the stress–strain graph for a rubber polymer?

Your answer D **[1]**

© OCR 2019

stemup.co.uk

5 A slide projector has a lens of focal length *f*. It is set up to give a large, magnified focused image on a screen. The screen is further than 2*f* from the lens centre.

(not to scale)

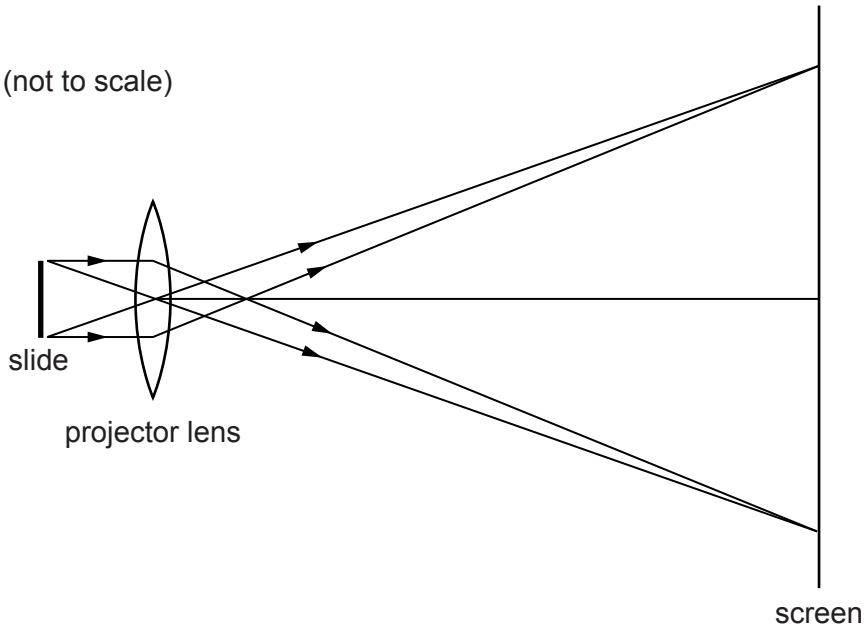

Where is the slide (object) placed?

A further than 2*f* from the lens centre

B at 2*f* from the lens centre

C between 2*f* and *f* from the lens centre

D at *f* from the lens centre

Your answer C **[1]**

© OCR 2019

The diagram is for use in questions **6** and **7**.
The diagram shows a sketch of a wave pattern on a vibrating string.

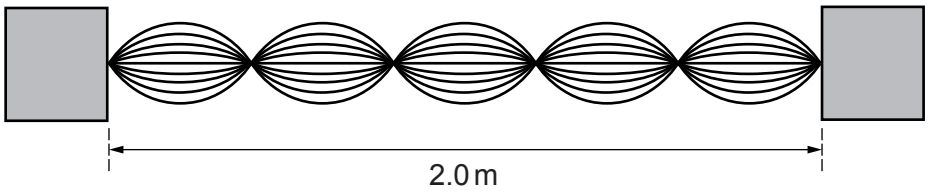

6 Which description of this wave is correct?

A The wave is longitudinal, has a wavelength of 40 cm and is stationary.

B The wave is transverse, has a wavelength of 40 cm and is stationary.

C The wave is transverse, has a wavelength of 80 cm and is progressive.

D The wave is transverse, has a wavelength of 80 cm and is stationary.

Your answer D **[1]**

7 The frequency of the wave shown in the diagram is 3.0 Hz.

What is the wave speed on the string?

A $1.2\,m\,s^{-1}$

B $2.4\,m\,s^{-1}$

C $3.8\,m\,s^{-1}$

D $7.5\,m\,s^{-1}$

Your answer B **[1]**

© OCR 2019

stemup.co.uk

8 A signal is digitised by sampling at 22 kHz.
The total voltage variation is 2.0 V and the noise voltage variation is 1.0 mV.

Which statement is correct?

A The highest frequency accurately sampled will be 11 kHz.

B The recommended number of bits per sample is 8.

C The voltage resolution of the sampling should be about 0.1 mV.

D $\frac{V_{total}}{V_{noise}} \approx 11 \times 10^3$

Your answer A **[1]**

9 The circuit shows a potential divider with resistors of R and $4R$.

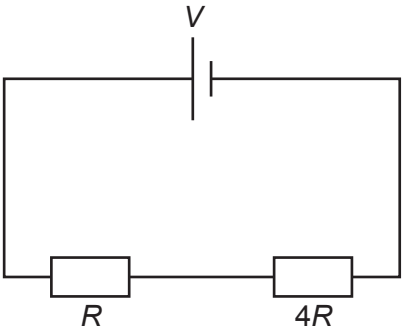

What is the ratio $\frac{\text{power dissipated in resistor } R}{\text{power dissipated in resistor } 4R}$?

A $\frac{1}{16}$

B $\frac{1}{4}$

C $\frac{4}{5}$

D 4

Your answer B **[1]**

© OCR 2019

10 A student is calculating the charge carrier number density of a metal.
She knows how many free electrons each atom contributes, the density of the metal and the molar mass of the metal.

Which further piece of information does she need to calculate the charge carrier number density?

A the Avogadro constant

B the charge on the electron

C the crystal structure of atomic packing

D the electrical conductivity of the metal

Your answer A **[1]**

11 A nickel wire has conductance of 0.43 S, a length of 2.0 m and a cross-sectional area of $5.0 \times 10^{-7}\,m^2$.

What is the conductivity of nickel in $S\,m^{-1}$?

A 1.1×10^{-7}

B 5.9×10^{-7}

C 1.7×10^{6}

D 9.3×10^{6}

Your answer C **[1]**

© OCR 2019

stemup.co.uk

12 A positive and a negative charge of equal magnitude are placed near each other.

Which diagram best represents the electric field of the two charges?

A

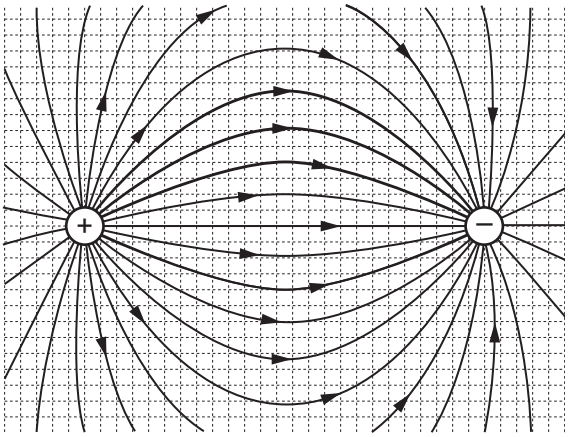

B

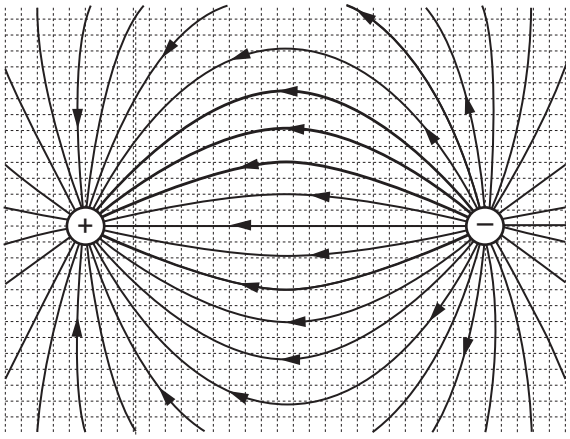

C

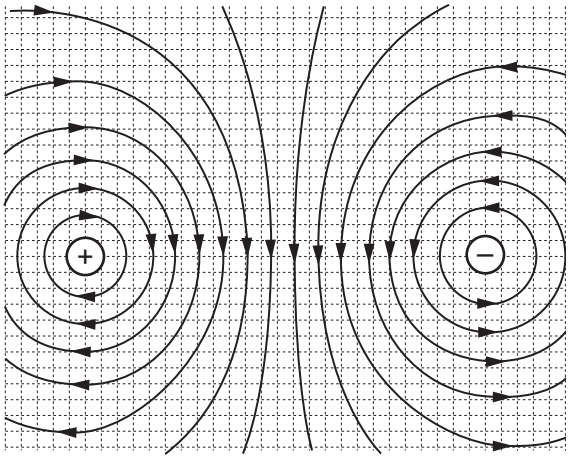

D

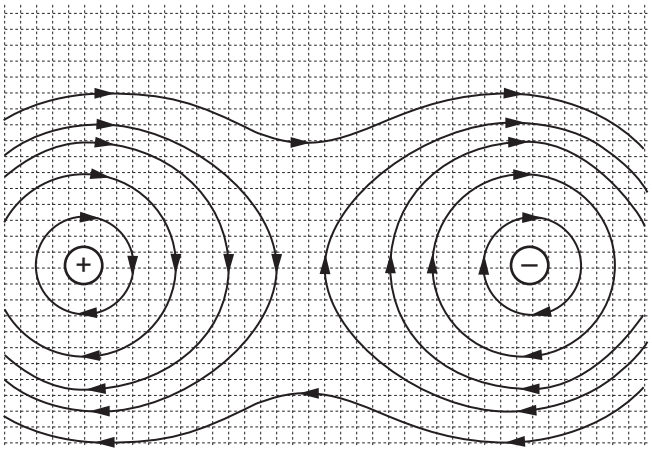

Your answer A

[1]

© OCR 2019

13 Two horizontal metal plates are 5.0 mm apart.
The plates are at potentials of + 120 V and + 40 V.

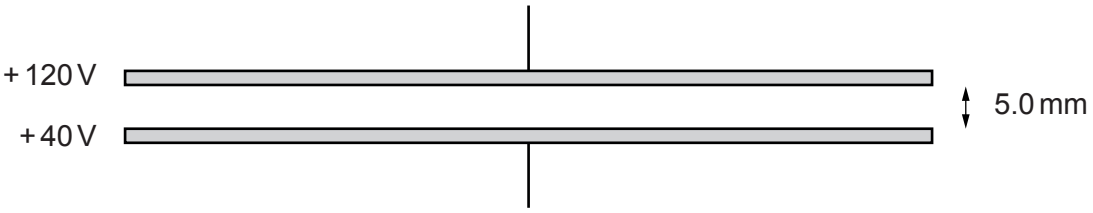

What is the force experienced by an electron in the electric field between the plates?

A 2.6×10^{-18} N

B 5.1×10^{-18} N

C 2.6×10^{-15} N

D 5.1×10^{-15} N

Your answer C **[1]**

14 The resistance R of an unknown resistor is found by measuring the potential difference V across the resistor and the current I through it, using the equation

$$R = \frac{V}{I}.$$

The voltmeter reading has a 2% uncertainty and the ammeter reading has a 3% uncertainty.
What is the best estimate of the uncertainty in the calculated resistance?

A 0.7%

B 3%

C 5%

D 6%

Your answer C **[1]**

© OCR 2019

stemup.co.uk

The following information is for use in questions **15** and **16**.

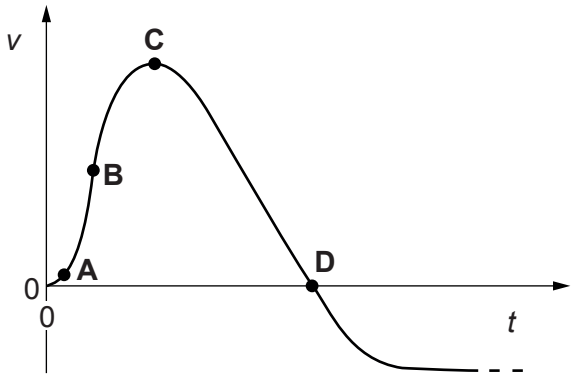

The graph shows how the vertical velocity *v* of a firework rocket changes with time *t*.

15 At which point labelled on the graph does the rocket have the greatest acceleration?

Your answer B **[1]**

16 At which point labelled on the graph does the rocket have the greatest altitude?

Your answer D **[1]**

© OCR 2019

17 The spring in this diagram has a spring constant k of $40\,\text{N}\,\text{m}^{-1}$.
The mass M of 0.50 kg is attached to the end of the suspended spring and then dropped under gravity.

acceleration due to gravity $g = 10\,\text{m}\,\text{s}^{-2}$

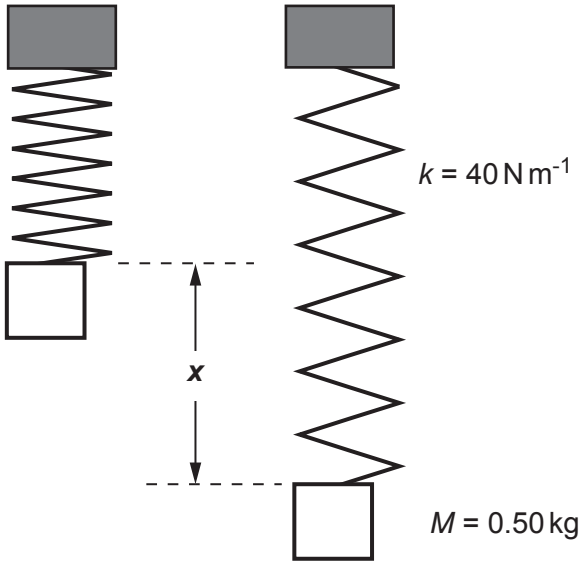

What is the maximum extension x of the spring in metres when the mass first comes to rest?

(Use ideas about energy conservation.)

A $\frac{1}{8}$

B $\frac{1}{4}$

C $\frac{1}{2}$

D 1

Your answer B **[1]**

© OCR 2019

stemup.co.uk

18 A fixed mass of gas occupies a volume V. The temperature of the gas is increased so that the mean square speed of the molecules is doubled.

What is the new volume of the gas, if the pressure remains constant?

A $\frac{V}{2}$

B $\frac{V}{\sqrt{2}}$

C $2V$

D $4V$

Your answer C **[1]**

19 Protons consist of quarks.

The 'up' anti-quark has a charge of $-\frac{2e}{3}$ and the 'down' anti-quark has a charge of $+\frac{1e}{3}$, where e is the charge on an electron.

What does an **anti-proton** contain?

	Up anti-quarks	**Down anti-quarks**
A	0	3
B	1	1
C	1	2
D	2	1

Your answer D **[1]**

© OCR 2019

20 A radioactive nucleus is formed by β-decay. This nucleus then decays by α-emission.

Which graph of nucleon number *N* plotted against proton number *Z* shows the β-decay followed by the α-emission?

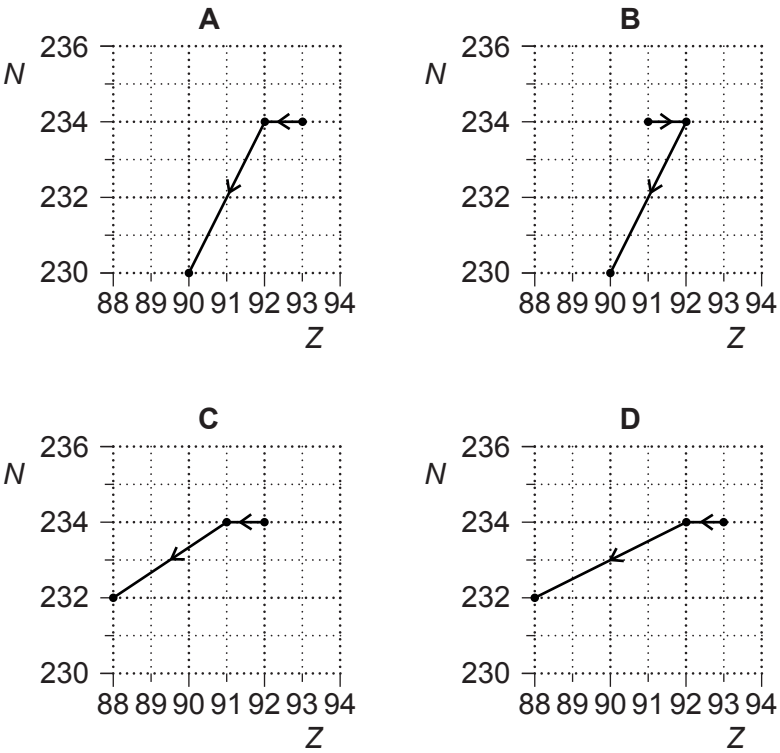

Your answer B **[1]**

© OCR 2019

stemup.co.uk

The following information is for use in questions **21** and **22**.

Two radioactive sources of equal mass are freshly prepared.
One is ^{225}Ra, which has a half-life of 15 days.
The other is ^{225}Ac, which has a half-life of 10 days.

21 After 30 days which ratio gives $\frac{\text{number of } ^{225}\text{Ra atoms remaining}}{\text{number of } ^{225}\text{Ac atoms remaining}}$?

A $\frac{1}{2}$

B $\frac{3}{4}$

C $\frac{4}{3}$

D 2

Your answer D **[1]**

22 After 30 days which ratio gives $\frac{\text{activity of the } ^{225}\text{Ra source}}{\text{activity of the } ^{225}\text{Ac source}}$?

A $\frac{1}{2}$

B $\frac{3}{4}$

C $\frac{4}{3}$

D 2

Your answer C **[1]**

© OCR 2019

23 An LDR is used in a potential divider circuit.

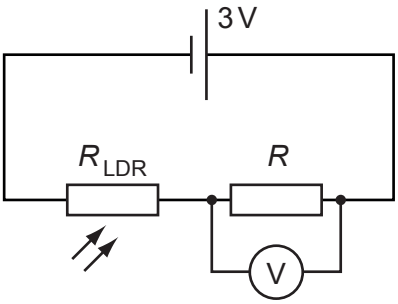

The graph shows the LDR resistance against light intensity.

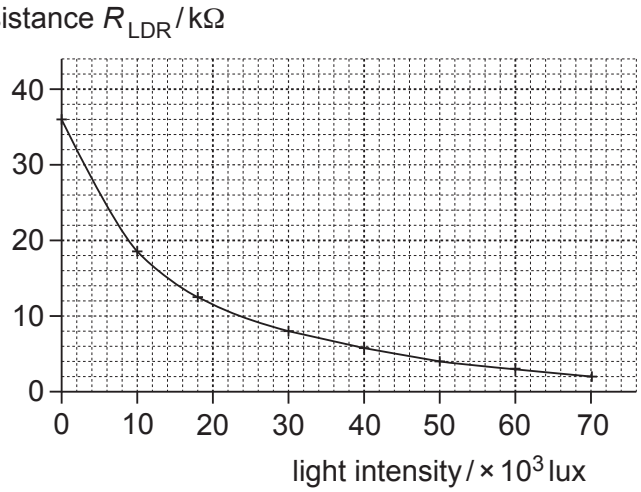

When the light intensity on the LDR is 30 × 10^3 lux, the reading on the voltmeter is 2.0 V.
What is the resistance R of the resistor?

A 4.0 kΩ

B 8.0 kΩ

C 12 kΩ

D 16 kΩ

Your answer D **[1]**

© OCR 2019

stemup.co.uk

24 The graph shows how the flux linkage $N\Phi$ through a coil changes with time when the coil is moved into a magnetic field.

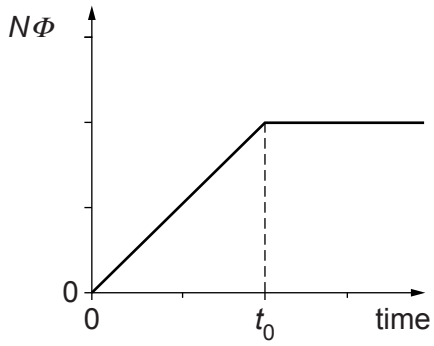

Which of the following graphs shows the magnitude of the induced e.m.f. ε in the coil over the same time period?

A

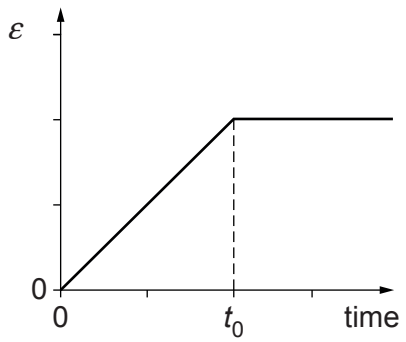

B

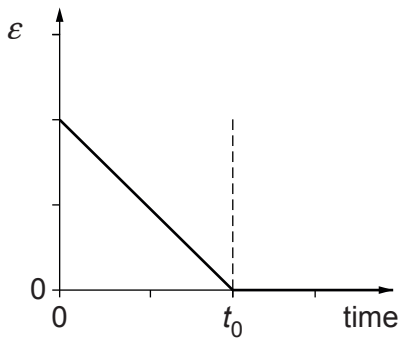

C

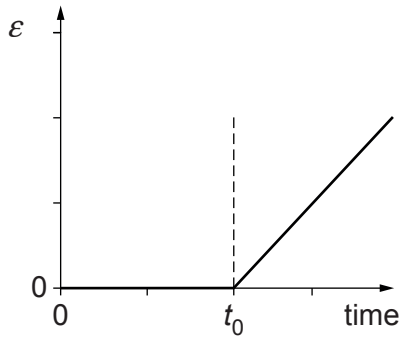

D

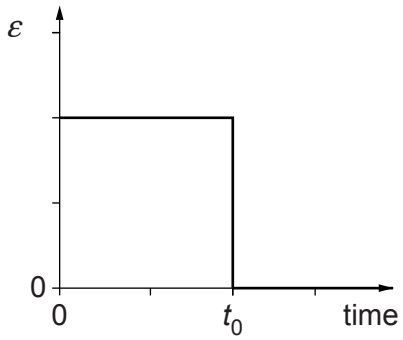

Your answer D **[1]**

© OCR 2019

The following information is for use in questions **25** and **26**.

A beam of α-particles collides with a lead sheet and is absorbed.
Each α-particle in the beam has a mass of 7×10^{-27} kg and a speed of $1 \times 10^{7}\,\mathrm{m\,s^{-1}}$.
3×10^{3} α-particles per second collide with an area of $1 \times 10^{-4}\,\mathrm{m^2}$ of lead.

25 What is the best estimate of the average pressure exerted on the lead by the α-particles?

A 2×10^{-20} Pa

B 2×10^{-16} Pa

C 2×10^{-12} Pa

D 2×10^{-8} Pa

Your answer C **[1]**

26 What is the best estimate of the energy of **one** of the α-particles?

A 2.2 MeV

B 3.5 MeV

C 4.4 MeV

D 5.6 MeV

Your answer A **[1]**

© OCR 2019

stemup.co.uk

This diagram is for use in questions **27** and **28**.

It shows a number of identical springs attached to identical masses joined in four different arrangements. Each spring constant is *k* and each mass is *m*.

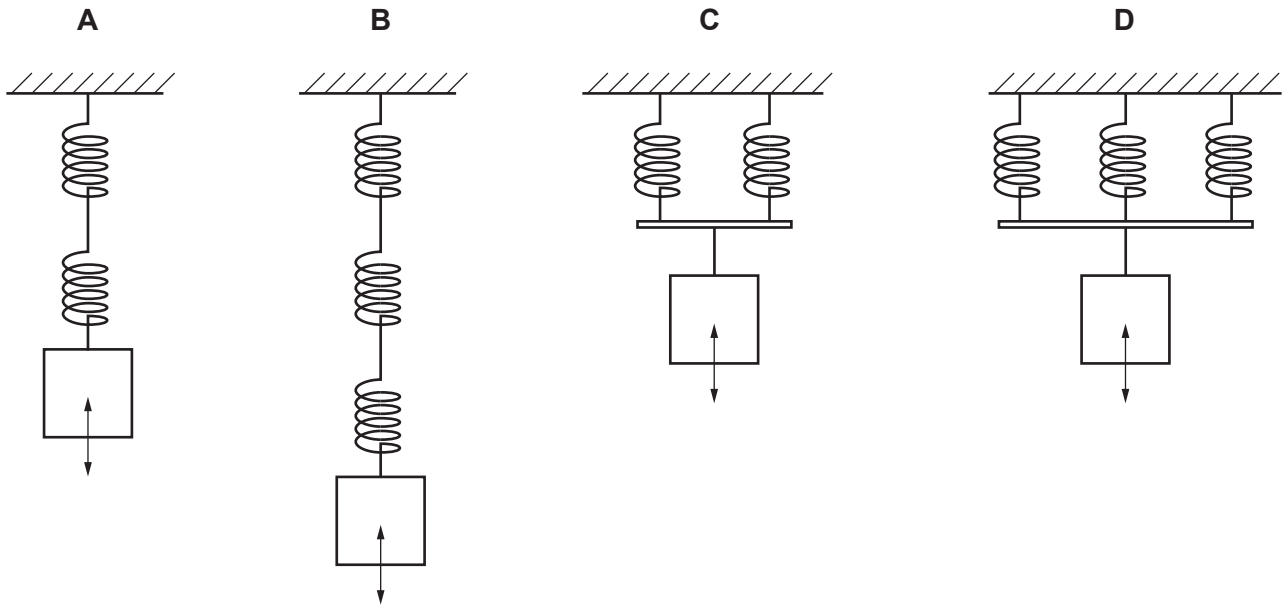

27 Which of the arrangements will give the simple harmonic oscillator of **lowest** frequency?

Your answer B **[1]**

28 Which of the arrangements will give a simple harmonic oscillator whose frequency *f* is given by the following equation?

$$f = \frac{1}{2\pi}\sqrt{\frac{2k}{m}}$$

Your answer C **[1]**

© OCR 2019

29 The graph shows neutron number N plotted against proton number Z for stable nuclei.

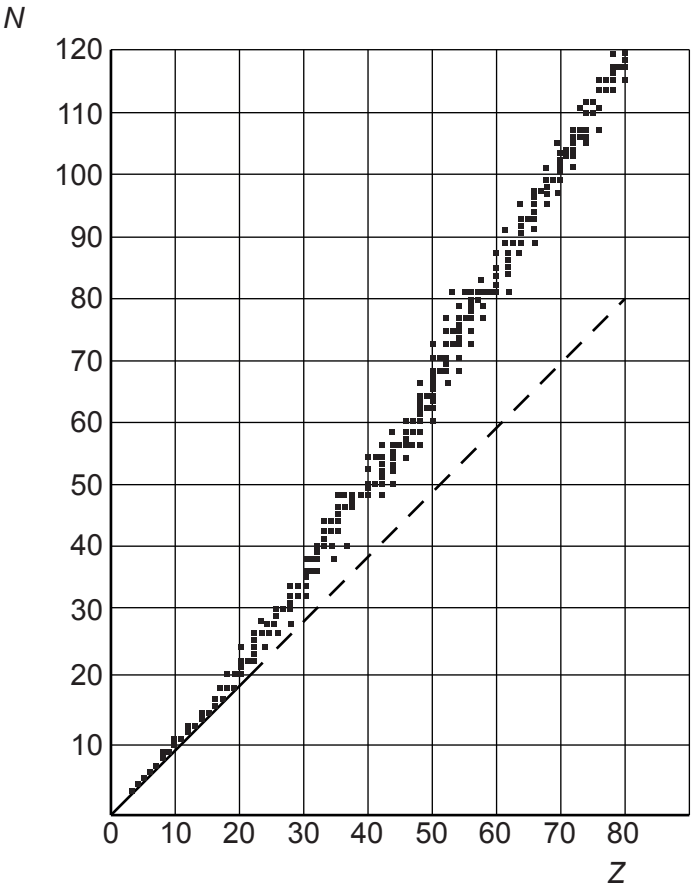

Which statements about stable nuclei are correct?

1 Nuclei of elements with $Z > 20$ have more protons than neutrons.

2 For the nuclei of lighter elements $N \approx Z$.

3 Greater $\frac{N}{Z}$ ratio is needed to hold larger nuclei together, because only nearest neighbour nucleons take part in the strong nuclear force of attraction to balance electrostatic repulsion.

A 1, 2 and 3 are correct

B only 1 and 2 are correct

C only 2 and 3 are correct

D only 1 is correct

Your answer C **[1]**

© OCR 2019

stemup.co.uk

30 The graph shows how the Boltzmann factor $f = e^{-E/kT}$ varies with absolute temperature T for an excitation process involving activation energy E.

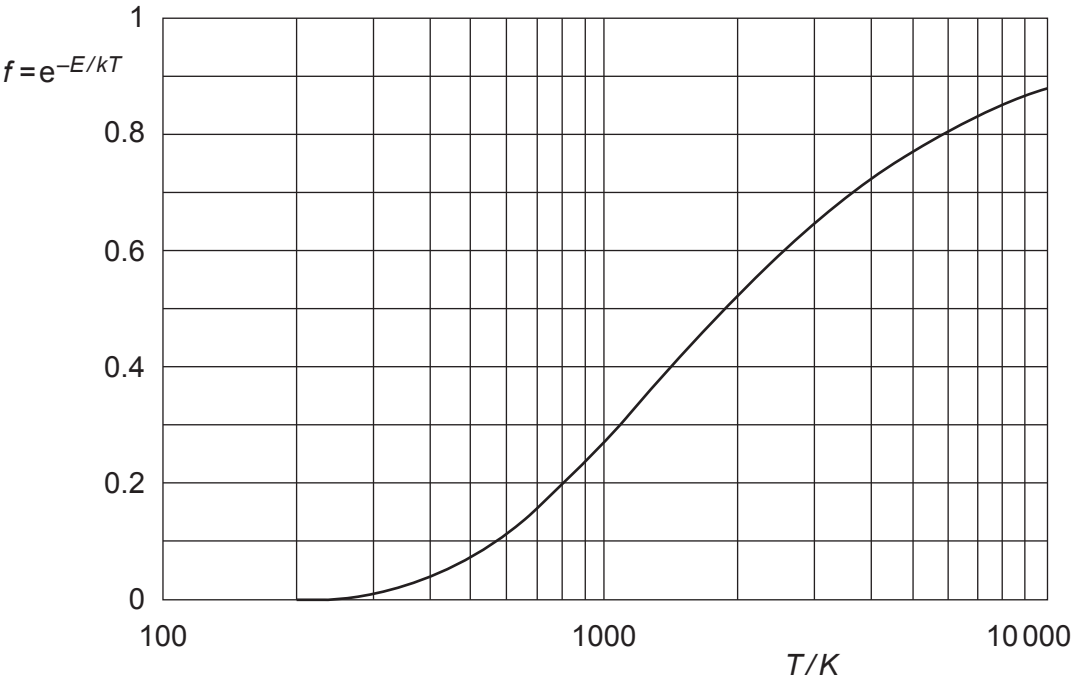

Which is the best estimate of the activation energy?

A 8×10^{-21} J

B 2×10^{-20} J

C 8×10^{-20} J

D 2×10^{-19} J

Your answer B **[1]**

© OCR 2019

SECTION B

Answer **all** the questions.

31 A student finds two electrical resistors; one is labelled 50 Ω and the other 0.10 S.

(a) Calculate the total resistance of the two resistors when in series.

conductance 0.10 S: $R = 1 / G = 1 / 0.10 = 10\ \Omega$

series: $R_{total} = 50 + 10 = 60\ \Omega$

total resistance = ..60..... Ω **[1]**

(b) Calculate the total conductance of the two resistors when in parallel.

50 Ω: $G = 1 / R = 1 / 50 = 0.020$ S

parallel: $G_{total} = 0.020 + 0.10 = 0.12$ S

total conductance = ..0.12..... S **[1]**

© OCR 2019

stemup.co.uk

32 A ball is projected horizontally twice with different velocities from 44 m above the base of a vertical cliff as shown in **Fig. 32**.

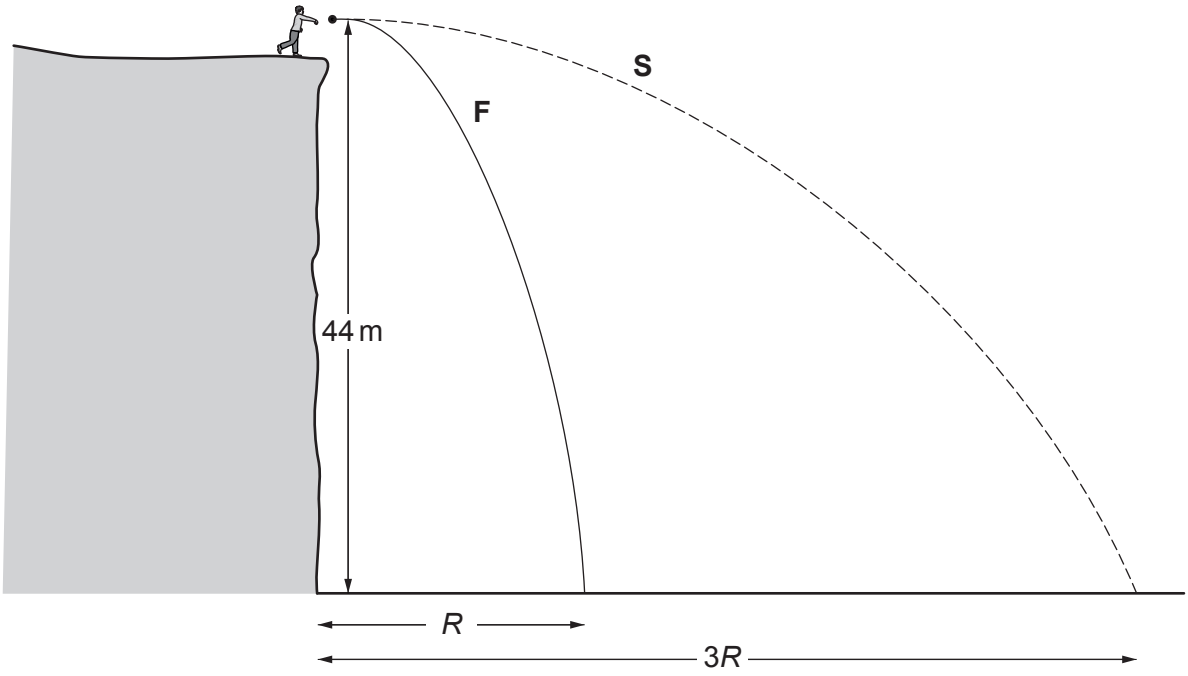

Fig. 32

(a) The first throw path **F** has initial horizontal velocity of $8.0\,\mathrm{m\,s^{-1}}$.

Calculate the horizontal range R for this path. You may ignore the effects of air resistance.

Gravitational acceleration, $g = 9.8\,\mathrm{m\,s^{-2}}$.

vertical: $s = \frac{1}{2}gt^2$, so $t = \sqrt{(2s / g)} = \sqrt{(2 \times 44 / 9.8)} = 3.0$ s

horizontal: $R = vt = 8.0 \times 3.0 = 24$ m

R = ..24..... m **[3]**

(b) The second path **S** is also from a horizontal projection and achieves a range that is three times larger ($3R$) than the first path **F**.

State the initial horizontal projection velocity for path **S**. Make your reasoning clear.

Both balls fall the same 44 m vertically, so the time of flight is the same (3.0 s). Range = v × t, so 3R needs 3 × the horizontal velocity: $v = 3 \times 8.0 = 24\ \mathrm{m\ s^{-1}}$ (or 72 m / 3.0 s = 24 m s^{-1})

initial projection velocity = ..24..... $\mathrm{m\,s^{-1}}$ **[2]**

© OCR 2019

33 A step-down transformer is shown in **Fig. 33**. Treat it as an ideal transformer.

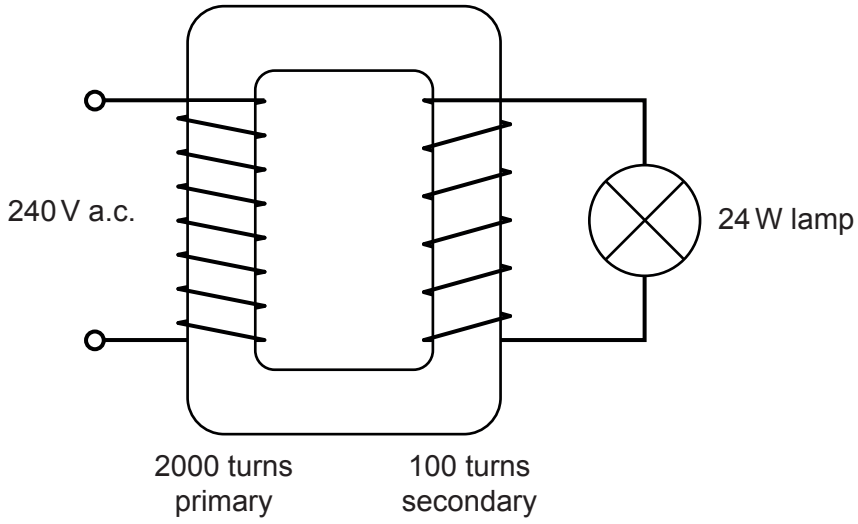

Fig. 33

(a) **(i)** Calculate the voltage across the lamp on the secondary coil.

turns ratio = 2000 / 100 = 20 : 1

$V_s = V_p \times (N_s / N_p) = 240 / 20 = 12$ V

voltage = ..12..... V **[2]**

(ii) Calculate the current flowing in the primary coil.

secondary current $I_s = P / V = 24 / 12 = 2.0$ A

ideal: $P_p = P_s$, so $I_p = 24$ W / 240 V = 2.0 / 20 = 0.10 A

current = ..0.10..... A **[2]**

(b) Real transformers are not ideal because of energy losses.

State **one** reason for energy losses in transformers.

..Heat loss in the coils (windings) caused by their electrical resistance (I^2R heating)..... **[1]**

© OCR 2019

stemup.co.uk

34 Subatomic particles called π^- mesons are produced with a kinetic energy of 73 MeV. The rest mass for π^- mesons is 140 MeV.

(a) **(i)** Show that the relativistic time dilation factor γ for these particles is less than 2.

$\gamma = E_{total} / E_{rest}$ = (rest energy + kinetic energy) / rest energy

$\gamma = (140 + 73) / 140 = 213 / 140 = 1.52$

$1.52 < 2$

γ = ..1.52..... **[2]**

(ii) Show that they are travelling at about 0.75 *c*.

$\gamma = 1 / \sqrt{(1 - v^2/c^2)}$, so $1 - (v/c)^2 = 1 / \gamma^2$

$v = c\sqrt{(1 - 1 / 1.52^2)} = c\sqrt{(1 - 0.432)} = c\sqrt{0.568}$

$v = 0.753c$, which is about $0.75c$

[2]

(b) The mean lifetime of π^- mesons at low speeds is 2.6×10^{-8} s.

Calculate the mean distance the fast mesons will travel before decaying.

lifetime in lab frame = $\gamma\tau = 1.52 \times 2.6 \times 10^{-8} = 3.96 \times 10^{-8}$ s

$v = 0.753 \times 3.0 \times 10^8 = 2.26 \times 10^8$ m s^{-1}

$L = \gamma\tau v = 3.96 \times 10^{-8} \times 2.26 \times 10^8 = 8.9$ m

mean distance = ..8.9..... m **[2]**

© OCR 2019

35 **Fig. 35** (not to scale) shows a double slit illuminated by laser light.
The positions of the central maximum and the first minimum for the waves incident on a distant screen are shown. The phasors representing these waves are given in the first and fourth rows of the table below. Positions **A** and **B** divide the distance between the central maximum and the first minimum into equal thirds.

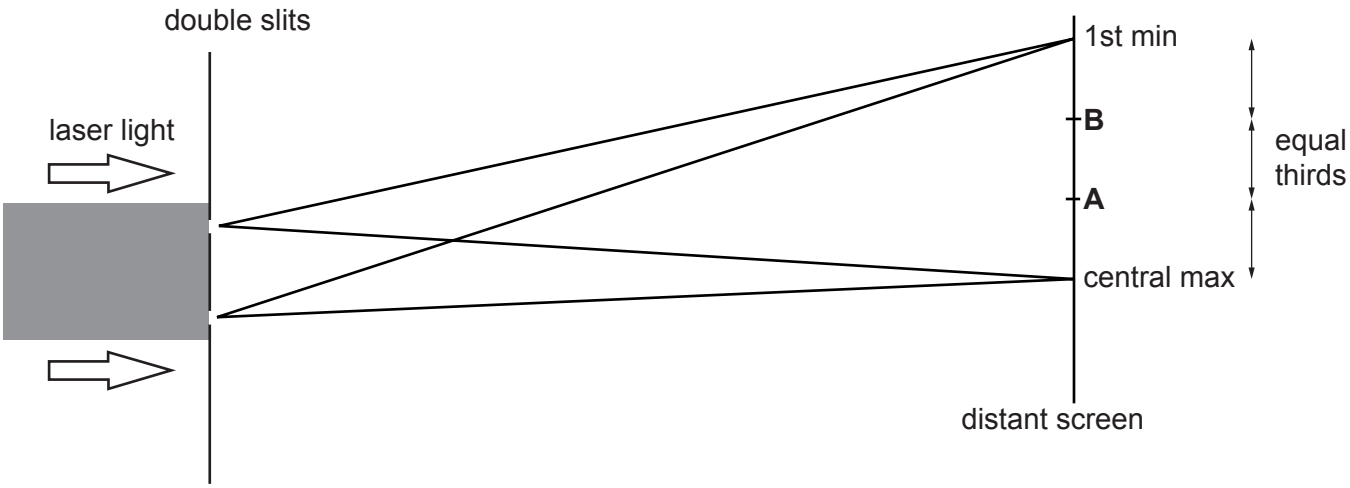

Fig. 35 (not to scale)

Position	Phasors	Resultant phasor	Relative intensity
1st min		0	0
B	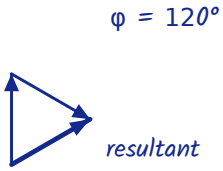	1	1
A	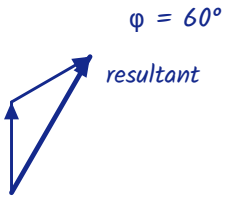	$\sqrt{3}$ (≈ 1.7)	3
central max	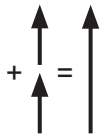	2	4

Complete the table above for positions **A** and **B**, showing the phasors, their addition and the value of the relative intensity at the distant screen. **[3]**

© OCR 2019

stemup.co.uk

SECTION C

Answer **all** the questions.

36 This question considers the digital image processing of medical images. **Fig. 36.1** compares the response to radiation of photographic film **F** and a digital X-ray detector **D**.

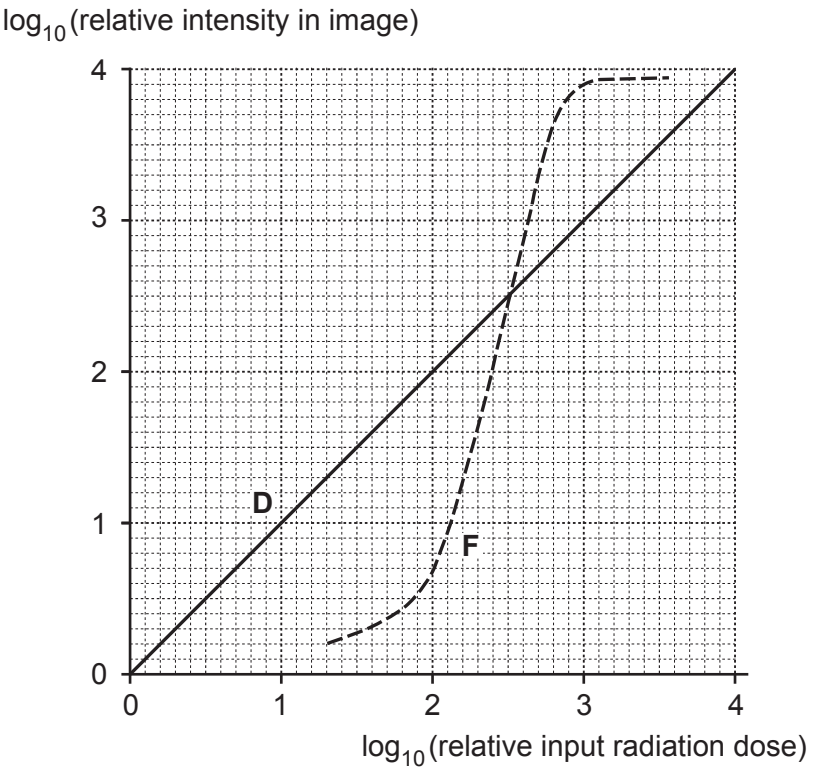

Fig. 36.1

(a) **(i)** State why a log – log scale has been used to represent the data.

Both quantities cover a very large range, four orders of magnitude (10^0 to 10^4), so a log scale spaces the values out. **[1]**

(ii) State an advantage that the response of the detector **D** has over that of the film **F**.

D has a (directly) proportional, linear response over a larger range of doses, so a lower dose can be used on the patient. **[1]**

© OCR 2019

(iii) For detector **D** the relative intensity is the pixel value.

Show that 14 bits per pixel are enough to cover the range of intensities plotted.

range of intensities = 10^4 = 10 000 *levels, so need* $2^n \geq 10\ 000$

$n \log_{10}2 = 4$, *so* $n = 4 / \log_{10}2 = 13.3$, *so* 14 *bits are needed*

($2^{14} = 16\ 384 > 10\ 000$ *but* $2^{13} = 8192 < 10\ 000$)

[2]

(b) **Fig. 36.2** and **Fig. 36.3** show an X-ray digital detector image before and after image processing.

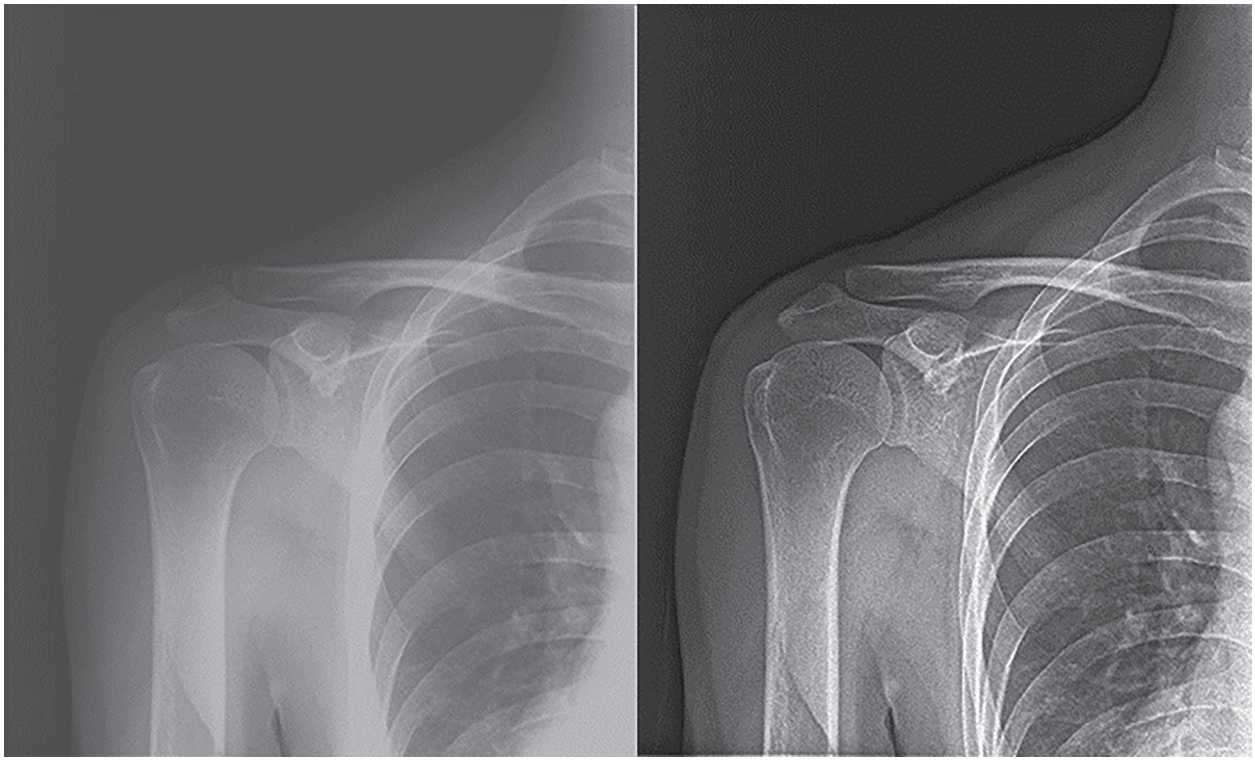

Fig. 36.2 **Fig. 36.3**

(i) The image format is 2048 × 1680 pixels with 4096 greyscale levels.

Calculate the amount of memory in bits needed to store an uncompressed image.

$4096 = 2^{12}$, *so* 12 *bits per pixel*

memory = $2048 \times 1680 \times 12 = 4.13 \times 10^7$ *bits*

memory required = ...4.13×10^7..... bits **[2]**

© OCR 2019

stemup.co.uk

(ii) During image processing the radiologist interpreting the image can stretch the contrast of the bone structures (whiter parts of image) more than the darker regions.

Suggest a benefit to the radiologist of having different contrast adjustment applied to different pixel value ranges.

Bones are of particular interest but receive lower X-ray exposure than soft tissue; stretching these pixel values gives a wider range of pixel values within the bone structure, revealing more detail of features of interest than altering the darker over-exposed areas. **[1]**

(iii) Identify **one** process (other than contrast improvement) that has been applied to the image in **Fig. 36.2** to produce the enhanced image in **Fig. 36.3**. Suggest the benefit to the radiologist interpreting the image.

Edge enhancement (sharpening the edges of the bones).

Benefit: the boundaries of the bone are clearer, which helps the radiologist look for bone fractures and splinters.

[1]

© OCR 2019

37 This question is about the fusion of the nuclei of the hydrogen isotopes ^{2}H and ^{3}H to produce helium ^{4}He. **Fig. 37.1** shows the average binding energy per nucleon against the nucleon number.

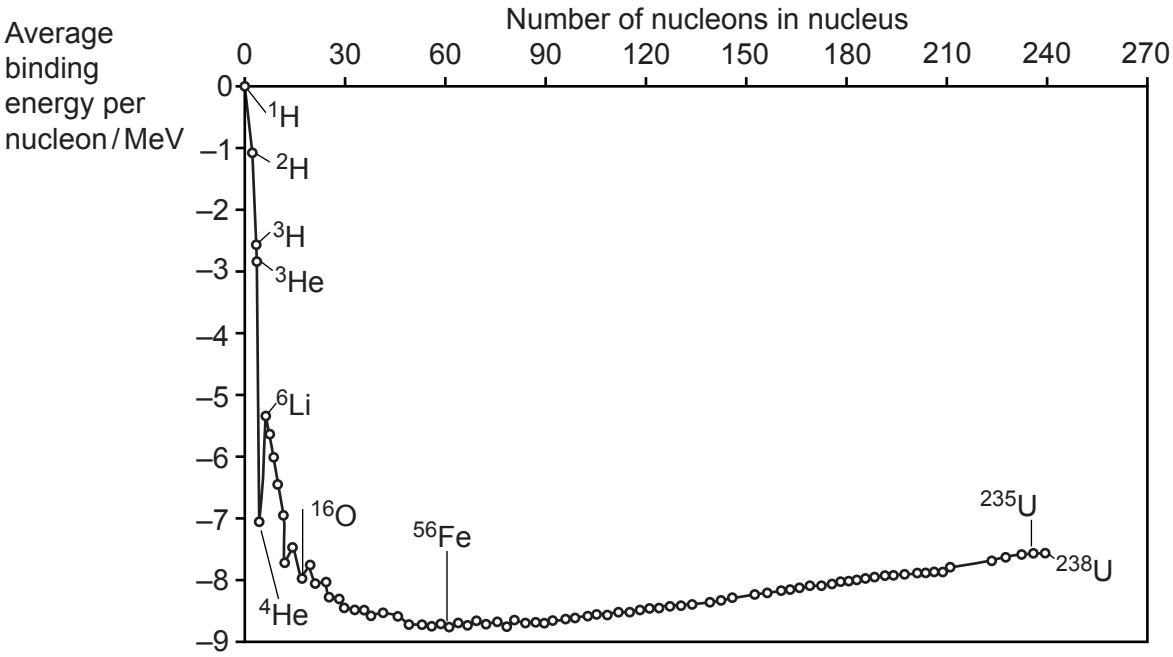

Fig. 37.1

(a) **(i)** Complete the equation for this fusion reaction:

$$^{2}_{1}H + ^{3}_{1}H \rightarrow ^{4}_{2}He + ^{1}_{0}n + \text{released binding energy.}$$ **[1]**

(ii) Use data from **Fig. 37.1** to show that the binding energy released in this reaction is more than 15 MeV.
You should calculate the binding energy of the reactants (hydrogen nuclei) and products.

^{2}H: 2 × (–1.0) = –2.0 MeV; ^{3}H: 3 × (–2.5) = –7.5 MeV

1 reactants binding energy = ...–9.5 MeV....

^{4}He: 4 × (–7.0) = –28.0 MeV (neutron has no binding energy)

2 products binding energy = ...–28.0 MeV....

energy released = –9.5 – (–28.0) = 18.5 MeV

18.5 MeV > 15 MeV

[2]

© OCR 2019

stemup.co.uk

(iii) Use ideas about momentum to explain why the neutron carries away about $\frac{4}{5}$ of this energy.

Momenta are equal and opposite: 4m × v = m × 4v, so the neutron has 4 times the speed of the ^{4}He nucleus.

k.e. ratio n : He = ½m(4v)^2 : ½(4m)v^2 = 4 : 1, so the neutron has 4/5 of the energy. **[2]**

(b) (i) To estimate the temperature at which ^{2}H and ^{3}H nuclei will fuse, a student writes down the formula:

$$\frac{e^2}{4\pi\varepsilon_0 R} \approx kT$$

Explain what the two sides of the approximation tell us:

1 $\frac{e^2}{4\pi\varepsilon_0 R}$ the electrical potential energy of two proton charges (+e each) approaching to a separation R, where the strong nuclear attraction overcomes the electrical repulsion

2 kT an estimate of the mean thermal (kinetic) energy per particle at absolute temperature T; when kT is about equal to the left side, many nuclei can get close enough to fuse

[2]

(ii) Use the equation in **(b)(i)** to estimate this temperature when $R \approx 2 \times 10^{-14}$ m.

$T = e^2 / (4\pi\varepsilon_0 R k)$

$T = 9.0 \times 10^9 \times (1.6 \times 10^{-19})^2 / (1.38 \times 10^{-23} \times 2 \times 10^{-14})$

$T = 8.3 \times 10^8$ K

temperature = 8.3×10^8 K **[1]**

© OCR 2019

(c) An experimental fusion reactor uses many powerful lasers focused onto a small spherical bead of solid ^2H and ^3H. The volume of the bead is 4.2 mm^3.
The aim is to produce a plasma implosion where fusion will begin when the temperature and density are high enough.

(i) The density of the bead of solid ^2H and ^3H (1:1 ratio by atoms) is 230 kg m^{-3}.

Estimate the energy needed to produce plasma at 400 MK from this bead of material.

mass of bead = $\rho V = 230 \times 4.2 \times 10^{-9} = 9.66 \times 10^{-7}$ kg

mean molar mass = 2.5×10^{-3} kg mol^{-1} (1:1 ^2H and ^3H)

$N = (9.66 \times 10^{-7} / 2.5 \times 10^{-3}) \times 6.02 \times 10^{23} = 2.3 \times 10^{20}$

$E \approx NkT = 2.3 \times 10^{20} \times 1.38 \times 10^{-23} \times 4.0 \times 10^{8}$

$E = 1.3 \times 10^{6}$ J

energy = ...1.3×10^6..... J **[3]**

(ii) Compare this to the possible fusion energy released by the bead.

Use your answer to **(a)(ii)**. You can assume 100% conversion to ^4He.

number of ^2H ^3H pairs = ½ × $2.3 \times 10^{20} = 1.16 \times 10^{20}$

$E_{fusion} = 1.16 \times 10^{20} \times 18.5 \times 10^{6}$ eV $= 2.1 \times 10^{27}$ eV

$= 2.1 \times 10^{27} \times 1.6 \times 10^{-19} = 3.4 \times 10^{8}$ J (340 MJ)

$E_{fusion} >> E_{heating}$: about 260 times the 1.3 MJ heating energy

[2]

(iii) Suggest **one** practical difficulty in obtaining energy by this method.

...Timing the high-energy laser pulses so they hit the bead simultaneously.....

...and evenly from all sides, for an extremely short duration.....

..... **[1]**

© OCR 2019

stemup.co.uk

38 This question is about the orbits of two comets **A** and **B** around the Sun.
Fig. 38.1 shows that comet **A** is in a circular orbit and comet **B** is in an elliptical orbit.
Comet **B** is shown in two positions: **B1** approaching the Sun and **B2** receding from the Sun.
Vectors have been added to represent the velocities and the gravitational forces acting on the comets in the positions shown.

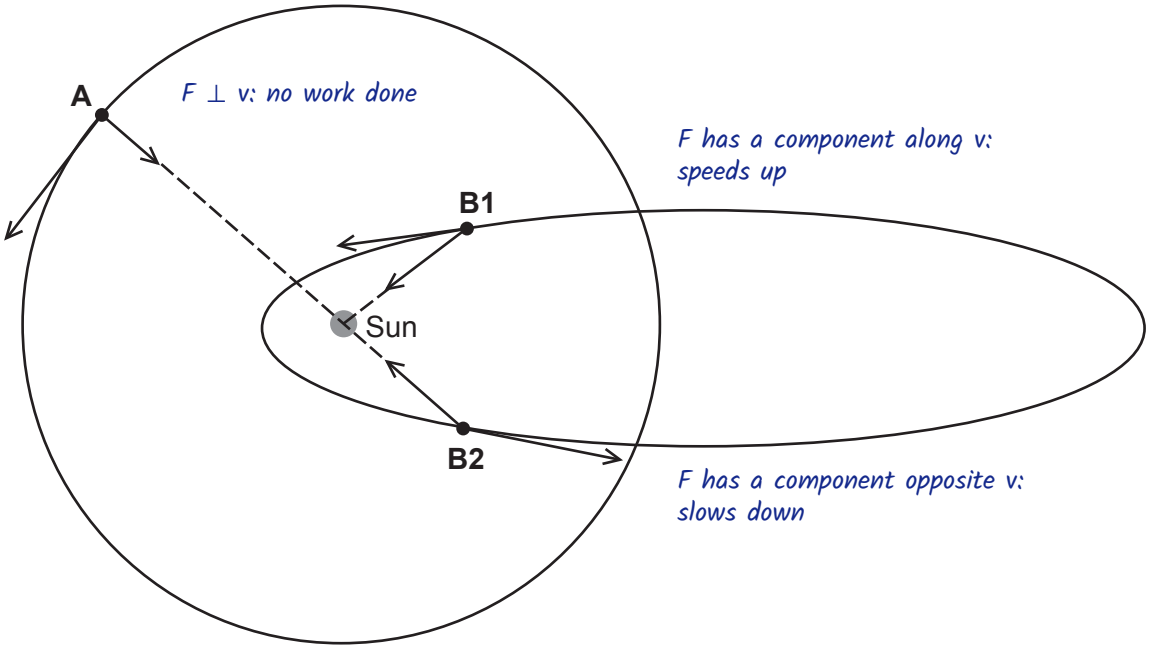

Fig. 38.1

(a)* Compare and explain the orbits of the comets.

In your answer explain how the circular orbit can have a constant speed, and why the elliptical orbit cannot. Consider the role played by the force of gravity, and gravitational potential energy, in changing the velocity of the comets around their orbits.
You may find it useful to use labels on **Fig. 38.1** as part of your answer. **[6]**

Comet A (circular orbit): the gravitational force F from the Sun always acts towards the centre of the circle, so it is always perpendicular to the velocity v (labelled on Fig. 38.1).

There is no component of force along the direction of motion, so gravity does no work on the comet: its kinetic energy and speed stay constant. The force only changes the direction of the velocity, giving a centripetal acceleration $a = v^2/r$.

$GMm/r^2 = mv^2/r$, so $v = \sqrt{(GM/r)}$: at a fixed radius any comet orbits at the same constant speed.

The circular orbit follows a gravitational equipotential, $V = -GM/r$ is constant,

© OCR 2019

so there is no change in gravitational potential energy and so no change in kinetic energy.

Comet B (elliptical orbit): its distance from the Sun changes, so its gravitational potential $V = -GM/r$ changes; it rises and falls in the Sun's potential well.

Additional answer space if required.

At B1 (approaching) the force has a component parallel to v, so gravity does work on the comet: it loses g.p.e. and gains k.e. and speeds up. The component perpendicular to v changes its direction.

At B2 (receding) the force has a component anti-parallel to v, so the comet slows down as it gains g.p.e. and loses k.e.; the perpendicular component again changes its direction.

So the speed of B cannot be constant: maximum k.e. (minimum p.e.) at closest approach and minimum k.e. (maximum p.e.) furthest from the Sun.

The force is also larger nearer the Sun ($F \propto 1/r^2$), so the acceleration is greater there.

Question 38 continues on page 34

© OCR 2019

stemup.co.uk

(b) It is believed that there is a black hole at the centre of our galaxy which is 26 000 light-years away. The orbits of several individual stars around the black hole have been determined. **Fig. 38.2** shows the orbits of two stars, around the black hole, in the plane perpendicular to the line of sight from Earth. **S1** is in a nearly circular orbit and **S2** is in an elliptical orbit. The position of the black hole is at the centre of the angle scale.

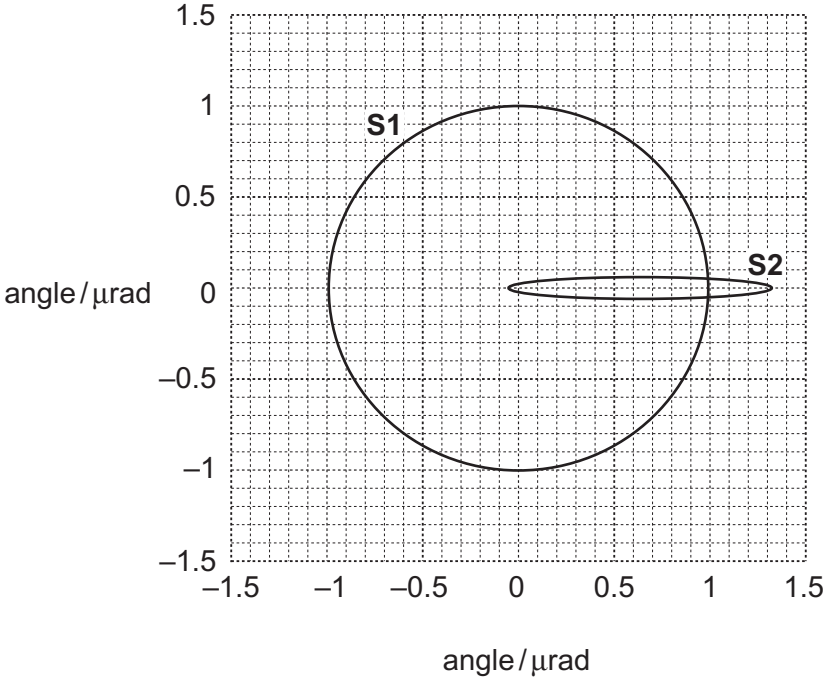

Fig. 38.2

(i) Show that the radius of the **S1** orbit is more than 2×10^{14} m.

1 light year ≈ 9.5×10^{15} m.

S1 orbit radius = 1.0 μrad = 1.0×10^{-6} rad (from Fig. 38.2)

$d = 26\,000 \times 9.5 \times 10^{15} = 2.47 \times 10^{20}$ m

$r = d\theta = 2.47 \times 10^{20} \times 1.0 \times 10^{-6} = 2.5 \times 10^{14}$ m > 2×10^{14} m

[2]

© OCR 2019

(ii) The orbital period of **S1** is 33 years.

Show that the mass of the black hole is about 4 million times the mass of the Sun.

Mass of the Sun ≈ 2.0×10^{30} kg.

$GMm / R^2 = m(2\pi R / T)^2 / R$, so $M = 4\pi^2 R^3 / (GT^2)$

$T = 33 \times 3.16 \times 10^7 = 1.04 \times 10^9$ s

$M = 4\pi^2 \times (2.47 \times 10^{14})^3 / (6.67 \times 10^{-11} \times (1.04 \times 10^9)^2)$

$M = 8.2 \times 10^{36}$ kg

$M / M_{Sun} = 8.2 \times 10^{36} / 2.0 \times 10^{30} = 4.1 \times 10^6$

so about 4 million times the mass of the Sun

[3]

(iii) Star **S2** is in an elliptical orbit around the black hole.
The closest approach of **S2** to the central mass is 6.5×10^{12} m.

The Schwarzschild radius R_S of a massive body is the radius inside which its escape velocity would be greater than light speed and is given by:

$$R_S = \frac{2GM}{c^2}$$

Show that the Schwarzschild radius of the object at the galactic centre is less than the closest approach of star **S2**.

$R_S = 2GM / c^2 = 2 \times 6.67 \times 10^{-11} \times 8.2 \times 10^{36} / (3.0 \times 10^8)^2$

$R_S = 1.2 \times 10^{10}$ m

1.2×10^{10} m $< 6.5 \times 10^{12}$ m (about 500 times smaller), so R_S is

less than the closest approach of S2

[1]

© OCR 2019

stemup.co.uk

39 **Fig. 39.1** shows the charging of a 50 mF capacitor by a 10 V supply.

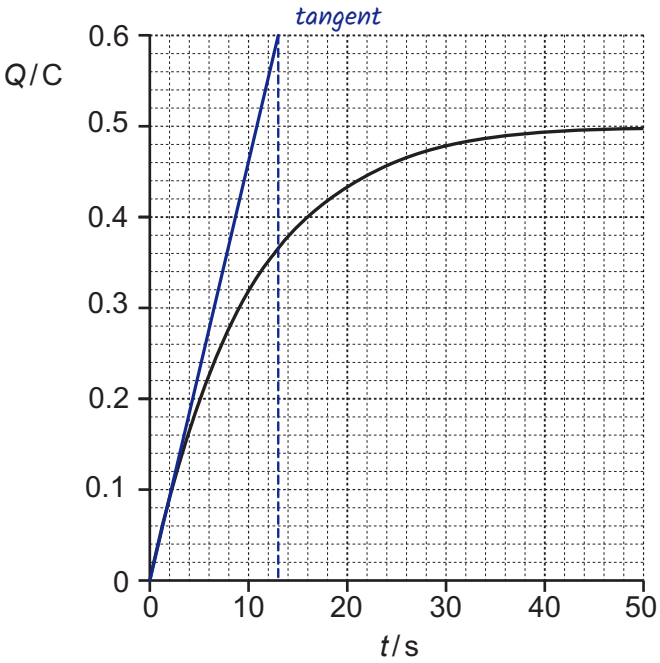

Fig. 39.1

(a) **(i)** Use the graph to find the initial current when the capacitor starts to charge. Make your method clear.

initial current = initial gradient of Q against t graph (ΔQ / Δt)

tangent at origin: ΔQ / Δt = 0.60 C / 13 s = 0.046 A

initial current = ..*0.046*..... A **[2]**

(ii) Calculate the size of the electrical resistance in the charging circuit.

R = V / I

R = 10 / 0.046 = 217 Ω

resistance = ..*217*..... Ω **[2]**

© OCR 2019

(b) Explain why the charging current decreases as the capacitor charges.

As the capacitor charges, the p.d. across it increases and opposes the applied 10 V, so less than 10 V is across the resistor and the current decreases. **[1]**

(c) **(i)** A student makes an iterative model for the charging of the capacitor in **(a)**, using time intervals $\Delta t = 2.0$ s. The start conditions and the situation at times $t = 2.0$ s and 4.0 s have been correctly completed in the table below.

Time lapsed / s t	**Charge Q on capacitor / C** $Q = (Q + \Delta Q)$	**P.d. across capacitor / V** $V_C = \frac{Q}{C}$	**Current flowing / A** $I = \frac{V_R}{R} = \frac{(10 - V_C)}{200}$	**Charge ΔQ arriving in time interval $\Delta t = 2$ s / C** $\Delta Q \approx I\,\Delta t$
0	0	0	10/200 = 0.050	0.05 × 2 = 0.1
2.0	0.10	0.1/0.05 = 2.0	8/200 = 0.040	0.04 × 2 = 0.08
4.0	0.18	0.18/0.05 = 3.6	6.4/200 = 0.032	0.032 × 2 = 0.064
6.0	0.244	4.88	0.0256	0.0512

Complete the numerical values at time $t = 6.0$ s in the cells in the table. **[2]**

(ii) Compare the model values for the charge Q on the capacitor at time $t = 4.0$ s with the experimental values from **Fig. 39.1**.
Explain any differences and state how the model could be improved to be closer to the experimental values.

At $t = 4.0$ s the graph gives $Q = 0.16$ C, but the model gives 0.18 C, so the model value is larger than the experimental value. The charge flow ΔQ in each Δt is too large because the current is assumed constant during Δt (in reality it is decaying as the capacitor charges). To improve, make Δt smaller (until the difference is negligible). **[2]**

© OCR 2019

stemup.co.uk

40 **Fig. 40.1** shows the voltage–current characteristic for an illuminated solar cell.

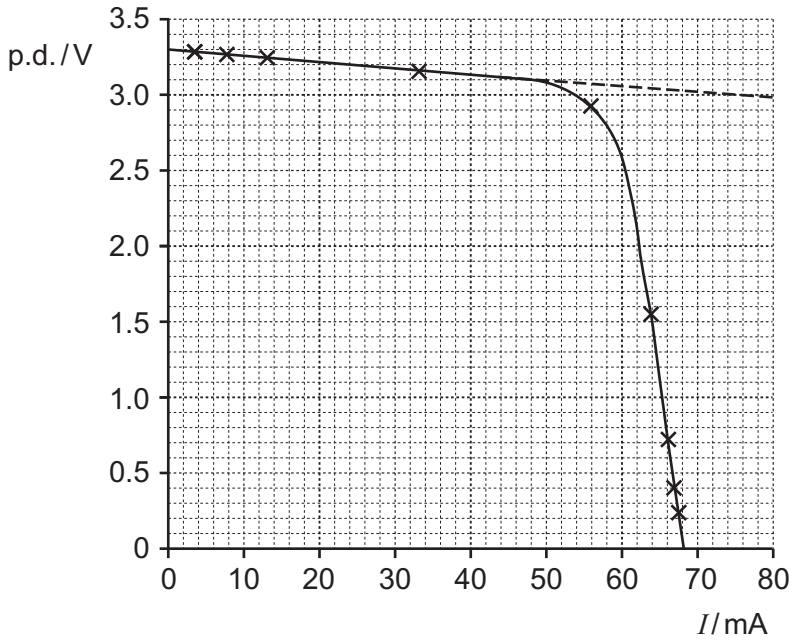

Fig. 40.1

(a) **(i)** Use the initial gradient of the graph to calculate the internal resistance of the cell under this illumination.

initial gradient: p.d. falls from 3.30 V to 3.00 V as I rises 0 to 80 mA

r = ΔV / ΔI = 0.30 / 0.080 = 3.8 Ω

internal resistance = ..*3.8*..... Ω **[1]**

(ii) Calculate the maximum number of electrons per second that the cell can produce.

maximum current = 68 mA (when p.d. = 0)

electrons per second = I / e = 0.068 / 1.6 × 10^{-19} = 4.3 × 10^{17}

electrons per second = ...*4.3 × 10^{17}*..... s^{-1} **[2]**

(iii) Suggest a reason for this maximum rate in the case of the solar cell.

..*Each electron is given its energy by absorbing one photon, so the rate is*.....

..*limited by the photon flux on the cell*..... **[1]**

© OCR 2019

(b)* Describe the experiment you would use to obtain the data to plot the graph in **Fig. 40.1**. Include a circuit diagram with your method, give estimated values of circuit components, and explain any precautions you would take to ensure reliability. **[6]**

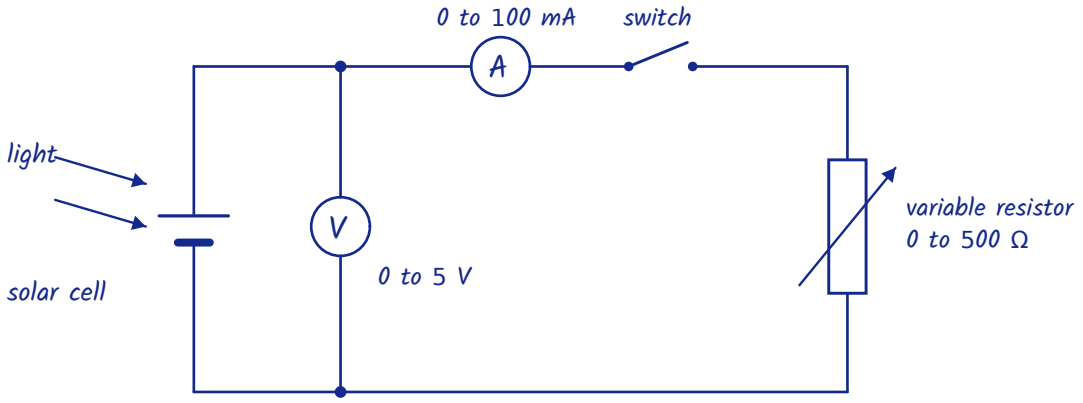

Circuit (above): solar cell in series with an ammeter (0 to 100 mA), a switch and a variable load resistor (about 0 to 500 Ω); a high-resistance voltmeter (0 to 5 V) connected in parallel across the cell.

Method: illuminate the cell with a mains lamp clamped at a fixed distance. With the switch open (only the meters connected) measure the e.m.f. ε of the cell.

Close the switch with the load resistor at its maximum value and record a pair of readings of p.d. V and current I.

Decrease the load resistance in steps and record V and I each time, taking more readings near the 'knee' of the curve, until the short-circuit current (about 68 mA) is measured with a very low load. Plot V against I.

Precautions for reliability: keep the lamp distance and position fixed and the room dark so the light intensity is constant; monitor the light intensity with a digital light meter to check for mains variations and avoid readings if the mains voltage drops.

Additional answer space if required.

Monitor the temperature of the cell so that it is constant during the data collection; if the lamp heats the cell, switch it off between readings and only turn it on during data collection.

© OCR 2019

stemup.co.uk

Repeat the readings at the same load settings so that mean values and uncertainties can be estimated.

41 This question is about loud annoying oscillations set up in the volume of air in a car when it travels at a specific speed with the sunroof partially open.
The oscillations are driven by a series of eddies that form in the air-flow above the sunroof aperture. Two of the eddies are shown in **Fig. 41.1**.

v = relative wind speed

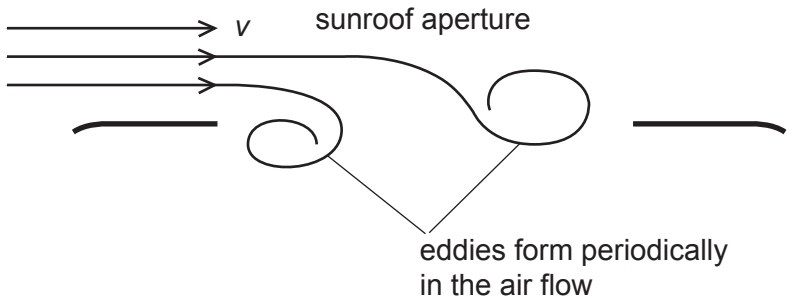

Fig. 41.1

The frequency of eddy production f is given by the equation $f = c\,v$ where v is the relative speed of the air flow and c is a constant.

(a) **(i)** **Fig. 41.2** shows the $f = c\,v$ proportionality and **Fig. 41.3** shows how the sound level in the car varies with speed v.

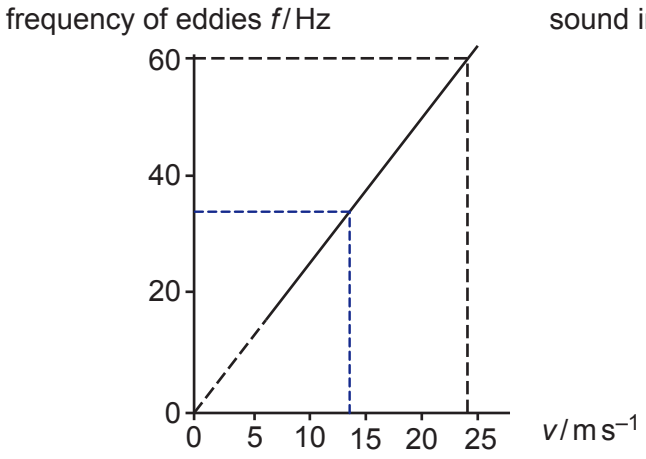

Fig. 41.2

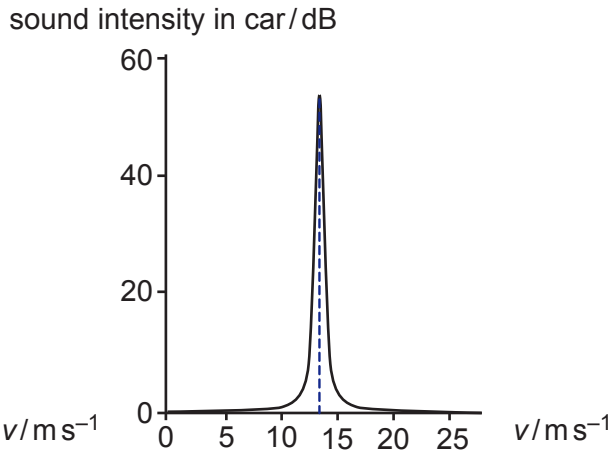

Fig. 41.3

© OCR 2019

Use **Fig. 41.2** and **Fig. 41.3** to estimate a value for the frequency f of the loud oscillation. Make your method clear.

Fig. 41.3: peak sound intensity at $v = 13.5\ m\ s^{-1}$

Fig. 41.2: at $v = 13.5\ m\ s^{-1}$, $f = 34$ Hz

(gradient $c = 60 / 24 = 2.5$, so $f = 2.5 \times 13.5 = 34$ Hz)

f = 34 Hz **[2]**

(ii) State the evidence that shows there is a resonant oscillation happening in this example.

The eddies are a periodic input ($f \propto v$) driving another oscillator, the volume of air in the car.

Large amplitude oscillations build up only over a narrow band of speeds (frequencies), when the driving frequency matches the natural frequency of the air: a sharp resonance peak, high Q (low damping).

[2]

(b) The resonant frequency f of an enclosed volume of air V, with an aperture area A, is given by:

$$f = \frac{u}{2\pi}\sqrt{\frac{A}{VL}}.$$

Calculate the resonant frequency f of oscillation of the air in a car with an open sunroof.

Where: $u = 340\,\mathrm{m\,s^{-1}}$ the speed of sound in air

and for this car:

$L = 0.14\,\mathrm{m}$ the effective length of air mass oscillating in the aperture.
$A = 0.18\,\mathrm{m^2}$
$V = 3.2\,\mathrm{m^3}$

$f = (u / 2\pi)\ \sqrt{(A / VL)}$

$f = (340 / 2\pi) \times \sqrt{(0.18 / (3.2 \times 0.14))}$

$f = 54.1 \times \sqrt{0.402} = 34$ Hz

f = 34 Hz **[2]**

END OF QUESTION PAPER

© OCR 2019

ADDITIONAL ANSWER SPACE

If additional space is required, you should use the following lined page(s). The question number(s) must be clearly shown in the margin(s).

© OCR 2019

© OCR 2019

OCR
Oxford Cambridge and RSA

Copyright Information

OCR is committed to seeking permission to reproduce all third-party content that it uses in its assessment materials. OCR has attempted to identify and contact all copyright holders whose work is used in this paper. To avoid the issue of disclosure of answer-related information to candidates, all copyright acknowledgements are reproduced in the OCR Copyright Acknowledgements Booklet. This is produced for each series of examinations and is freely available to download from our public website (www.ocr.org.uk) after the live examination series.

If OCR has unwittingly failed to correctly acknowledge or clear any third-party content in this assessment material, OCR will be happy to correct its mistake at the earliest possible opportunity.

For queries or further information please contact The OCR Copyright Team, The Triangle Building, Shaftesbury Road, Cambridge CB2 8EA.

OCR is part of the Cambridge Assessment Group; Cambridge Assessment is the brand name of University of Cambridge Local Examinations Syndicate (UCLES), which is itself a department of the University of Cambridge.

© OCR 2019