Oxford Cambridge and RSA

A Level Physics B (Advancing Physics)

H557/03 Practical skills in physics

Thursday 14 June 2018 – Morning

Time allowed: 1 hour 30 minutes

You must have:
- the Data, Formula and Relationships Booklet (sent with general stationery)

You may use:
- a scientific or graphical calculator
- a ruler (cm/mm)

First name	
Last name	

Centre number						Candidate number				

INSTRUCTIONS
- Use black ink. You may use an HB pencil for graphs and diagrams.
- Complete the boxes above with your name, centre number and candidate number.
- Answer **all** the questions.
- Write your answer to each question in the space provided. If additional space is required, use the lined page(s) at the end of this booklet. The question number(s) must be clearly shown.
- Do **not** write in the barcodes.

INFORMATION
- The total mark for this paper is **60**.
- The marks for each question are shown in brackets **[ ]**.
- Quality of extended responses will be assessed in questions marked with an asterisk (*).
- This document consists of **16** pages.

© OCR 2018 [601/4745/3]
DC (ST/SG) 154403/4
OCR is an exempt Charity

SECTION A

Answer **all** the questions.

1 **(a)** A student uses the circuit shown in Fig. 1 to investigate the characteristics of a filament bulb.

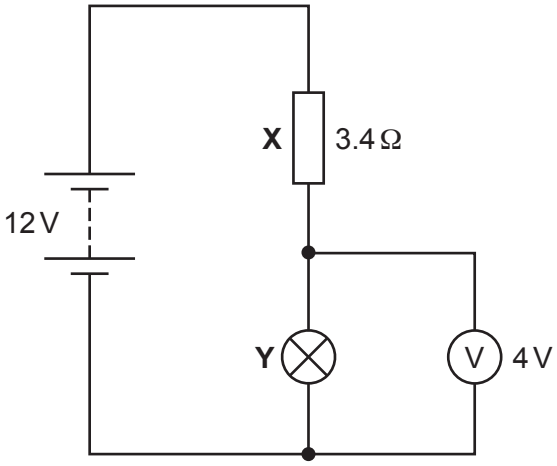

Fig. 1

(i) Show that the resistance *R* of the filament bulb **Y** in this circuit is approximately 2 Ω.

[2]

The bulb is broken and the diameter of the filament wire is measured. The diameter is found to be 0.046 ± 0.002 mm.

(ii) Calculate the cross sectional area *A* of the wire and the uncertainty.

A = ... ± ..... m^2 **[3]**

© OCR 2018

(iii) The filament is removed from the bulb housing and the length is measured to be 20 cm. Using your answer from **(a)(i)** calculate the conductivity σ of the filament of the bulb stating any assumption(s) that you make.

σ = ... Sm^{-1}

Assumption(s): .....

..... **[3]**

(b)* A new working **identical** bulb is put in the circuit in Fig. 1. The resistor **X** is changed to one with a resistance of 6.9 Ω. A student calculates that the voltage across resistor **X** will now be 6.0 V.
Using ideas about current, temperature and the structure of metals explain whether or not the student is correct.

.....

.....

.....

.....

.....

.....

.....

.....

.....

.....

.....

.....

.....

.....

.....

.....

..... **[6]**

© OCR 2018

2 An experiment is carried out to find the half-life of a solid radioactive isotope **X** which emits beta radiation.

(a) Describe **two** safety precautions necessary for handling such a material in the laboratory.

.....

.....

.....

.....

.....

..... **[2]**

(b) The results obtained from the experiment are given in the table below.

Time t / s	Count rate / Bq	Corrected count rate A / Bq	ln (A / Bq)
25	9.2	8.0	2.08
50	7.5	6.3	1.84
75	6.0	4.8	1.57
100	4.8		1.28
125	4.1	2.9	
150	3.4	2.2	
175	3.0		0.59
200	2.7	1.5	0.41
225	2.4	1.2	0.18

(i) Explain what is meant by "Corrected count rate" **and** complete this column in the table.

.....

.....

..... **[2]**

(ii) Complete the fourth column of the table by calculating the missing values for ln (A / Bq). **[1]**

© OCR 2018

(iii) A graph of ln (A / Bq) (y-axis) and t (x-axis) is drawn in Fig. 2. Plot the remaining points on the graph and draw the line of best fit. **[2]**

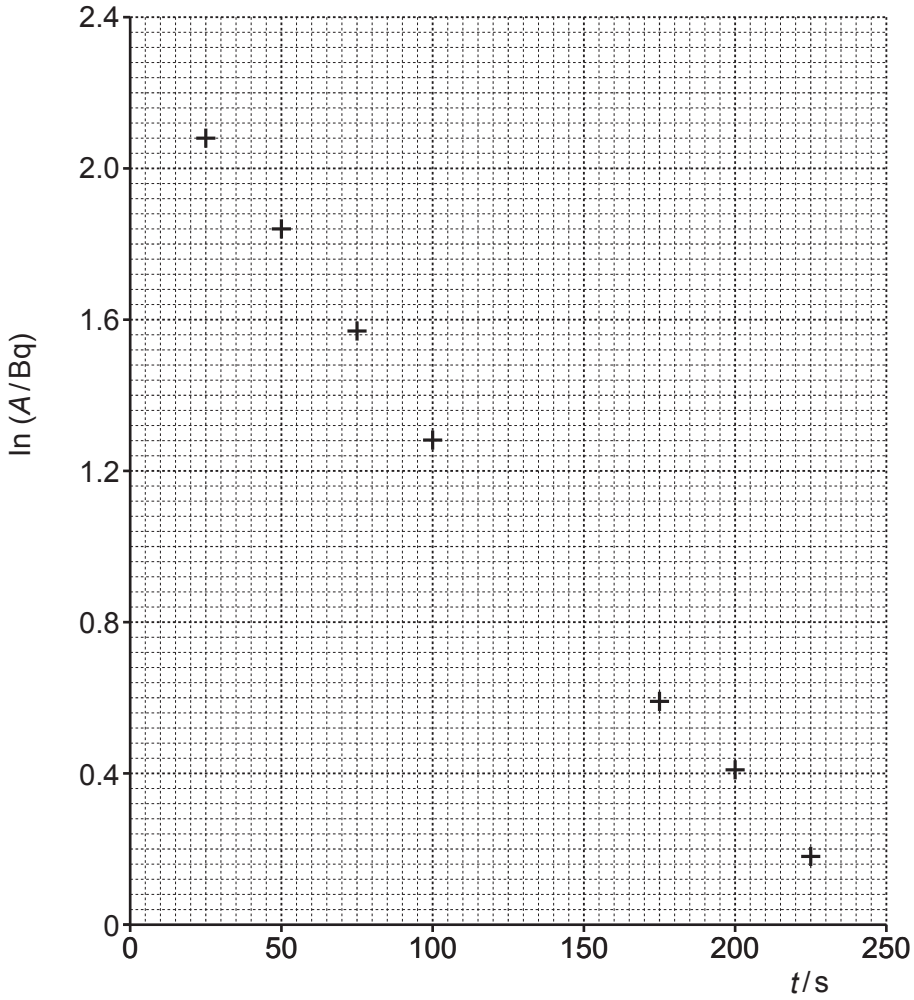

Fig. 2

(iv)* Use your graph to find the value of half-life for the radioactive isotope **X** and explain the advantages of using ln (A / Bq) against t over an A against t graph to find half-life. **[6]**

.....

.....

.....

.....

© OCR 2018

© OCR 2018

BLANK PAGE

PLEASE DO NOT WRITE ON THIS PAGE

Question 3 begins on page 8.

© OCR 2018

3 In 1917 Robert Millikan investigated the motion of tiny oil drops in an electric field and used this to determine the charge on the electron. He sprayed tiny oil drops between two parallel metal plates connected to a high voltage power supply and observed their motion. The experiment was set up as shown in Fig. 3.

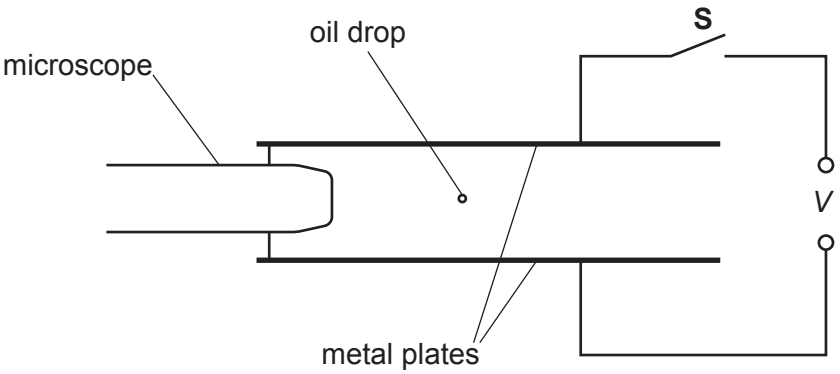

Fig. 3

As the oil drops are forced through a spray nozzle they become negatively charged.
With switch **S** open there is no potential difference between the plates and the oil drop is observed to be falling at constant velocity through the air.

(a) Explain why the oil drop falls at constant velocity through the air.

.....

.....

.....

.....

.....

..... **[3]**

(b) The switch **S** is closed and the potential difference is adjusted until the oil drop remains stationary between the two parallel plates.

The following data are recorded:

potential difference $V = 390\,\text{V}$
distance between the plates $d = 6.0\,\text{mm}$
mass of an oil drop $m = 2.15 \times 10^{-15}\,\text{kg}$.

(i) Calculate the electric field strength E between the two parallel plates.
Include a suitable unit.

E = ... unit ..... **[2]**

© OCR 2018

(ii) Calculate the charge q carried by each oil drop.

q = ... C **[3]**

(iii) This calculation does not take into account the effect of buoyancy from the displaced air. This effect produces an additional upwards force on the oil drop. Explain what effect this would have on the value calculated for charge.

.....

.....

.....

.....

.....

..... **[2]**

(c) The charge on the parallel metal plates is reversed. Explain the effect this has on the motion of the oil drop.

.....

.....

.....

.....

.....

..... **[2]**

© OCR 2018

BLANK PAGE

PLEASE DO NOT WRITE ON THIS PAGE

Section B begins on page 11.

© OCR 2018

SECTION B

Answer **all** the questions.

4 This question is about an experiment to determine the Young modulus of a copper wire.
The diameter *D* of the wire was measured using a micrometer screw gauge in several places along the length of the wire. The values obtained are shown in the dot-plot shown in Fig. 4.1. Each dot represents one reading.

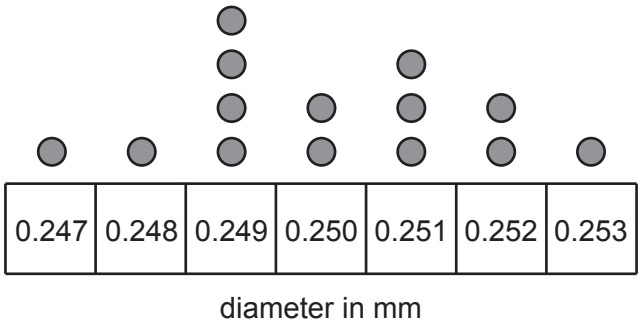

Fig. 4.1

(a) **(i)** Use the information in the dot-plot to find the mean *D*. Use the spread to determine the percentage uncertainty.

mean *D* = …… mm ± …… % **[3]**

(ii) Calculate the cross sectional area *A* of the wire and include the uncertainty.

A …… ± …… m^2 **[3]**

© OCR 2018

(b) A marker is placed to give an original length of the wire as 4.00 ± 0.02 m.
Fig. 4.2 shows the extension *x* of a metal wire at different applied loads *F*. *x* is measured to ± 0.5 mm and *F* is measured to ± 0.2 N. Fig. 4.2 shows the force-extension graph for the wire.

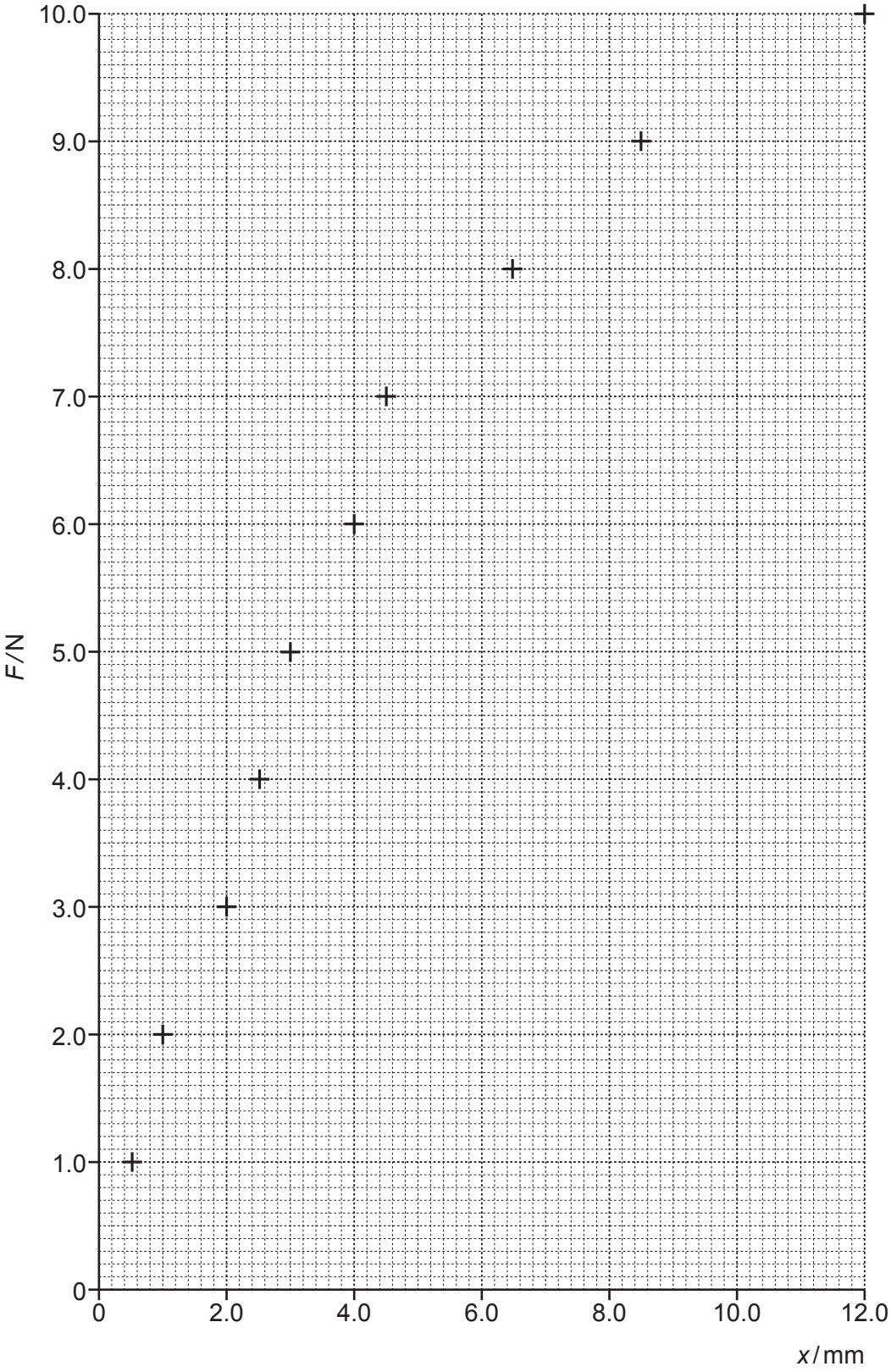

Fig. 4.2

© OCR 2018

(i) On Fig. 4.2
1 complete vertical and horizontal error bars on each of the plots
2 label the regions of elastic and plastic deformation
3 draw a line of best fit through the straight section of the graph. **[4]**

(ii) Use the graph and the data given to calculate the value of the Young Modulus *E*. Include the appropriate unit.

E = …… unit ..... **[5]**

(c)* Use Fig. 4.2 and your answer to part **(b)(ii)** to estimate the percentage uncertainty in the calculated value of the Young Modulus and describe the main sources of error in the experiment. Suggest and explain possible improvements to the experiment. **[6]**

.....

.....

.....

.....

.....

.....

.....

.....

© OCR 2018

END OF QUESTION PAPER

© OCR 2018

ADDITIONAL ANSWER SPACE

If additional space is required, you should use the following lined page(s). The question number(s) must be clearly shown in the margin(s).

© OCR 2018

OCR
Oxford Cambridge and RSA

Copyright Information

OCR is committed to seeking permission to reproduce all third-party content that it uses in its assessment materials. OCR has attempted to identify and contact all copyright holders whose work is used in this paper. To avoid the issue of disclosure of answer-related information to candidates, all copyright acknowledgements are reproduced in the OCR Copyright Acknowledgements Booklet. This is produced for each series of examinations and is freely available to download from our public website (www.ocr.org.uk) after the live examination series.

If OCR has unwittingly failed to correctly acknowledge or clear any third-party content in this assessment material, OCR will be happy to correct its mistake at the earliest possible opportunity.

For queries or further information please contact the Copyright Team, First Floor, 9 Hills Road, Cambridge CB2 1GE.

OCR is part of the Cambridge Assessment Group; Cambridge Assessment is the brand name of University of Cambridge Local Examinations Syndicate (UCLES), which is itself a department of the University of Cambridge.

© OCR 2018