Oxford Cambridge and RSA

A Level Physics B (Advancing physics)

H557/02 Scientific literacy in physics

Friday 8 June 2018 – Morning

Time allowed: 2 hours 15 minutes

You must have:
- the Insert (inserted)
- the Data, Formula and Relationships booklet (sent with general stationery)

You may use:
- a scientific or graphical calculator
- a ruler (cm/mm)

First name	
Last name	

Centre number						Candidate number				

INSTRUCTIONS
- The Insert will be found inside this document.
- Use black ink. You may use an HB pencil for graphs and diagrams.
- Complete the boxes above with your name, centre number and candidate number.
- Answer **all** the questions.
- Write your answer to each question in the space provided. If additional space is required, use the lined page(s) at the end of this booklet. The question number(s) must be clearly shown.
- Do **not** write in the barcodes.

INFORMATION
- The total mark for this paper is **100**.
- The marks for each question are shown in brackets **[ ]**.
- Quality of extended responses will be assessed in questions marked with an asterisk (*).
- This document consists of **28** pages.

© OCR 2018 [601/4745/3]
DC (CE/SG) 172640/5 **R**
OCR is an exempt Charity

SECTION A

Answer **all** the questions.

1 This question is about investigating the polarisation of light.

(a) A student takes two polarising filters as shown in Fig. 1.1.

Unpolarised light is incident on the filter 1.

Filter 2 is initially set up to allow all the light passing through the first filter to be transmitted. The filter 2 is then rotated through 360°.

Describe and explain how the intensity of the transmitted light changes during the rotation of the second filter.

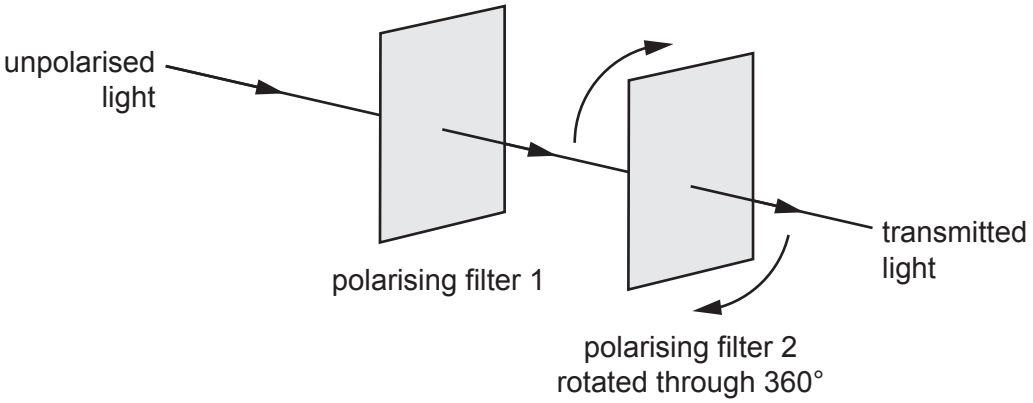

Fig. 1.1

.....

.....

.....

.....

.....

.....

.....

..... **[2]**

© OCR 2018

(b) The transmitted light strikes an LDR in the circuit shown in Fig. 1.2.

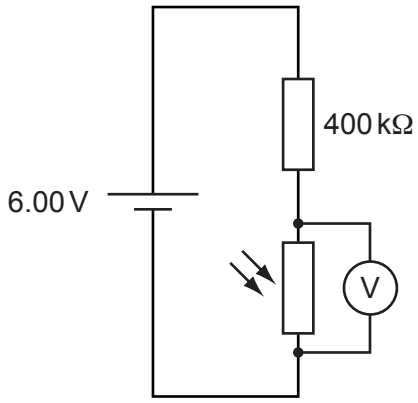

Fig. 1.2

(i) Describe and explain how the p.d. across the LDR changes as the second filter is rotated through 360° from its original orientation.

You do not need to give values for the p.d. but you should indicate the orientation of the filters which produce maximum and minimum p.d.s.

.....

.....

.....

.....

.....

.....

.....

..... **[4]**

(ii) The highest p.d. recorded by the voltmeter is 3.00 ± 0.01 V.

Calculate the **maximum** value of the resistance of the LDR at this point.

Assume that there is no uncertainty in the p.d. of the cell.

maximum value of resistance = ... Ω **[2]**

© OCR 2018

2 The equation shows a fission reaction.

$$^{235}_{92}U + ^{1}_{0}n \rightarrow ^{146}_{57}La + ^{87}_{35}Br + 3^{1}_{0}n$$

(a) Explain how this reaction can become a chain reaction and suggest how the rate of the reaction can be controlled.

.....

.....

.....

.....

..... **[2]**

(b) The graph in Fig. 2.1 shows the binding energies per nucleon of the nuclei involved in the reaction.

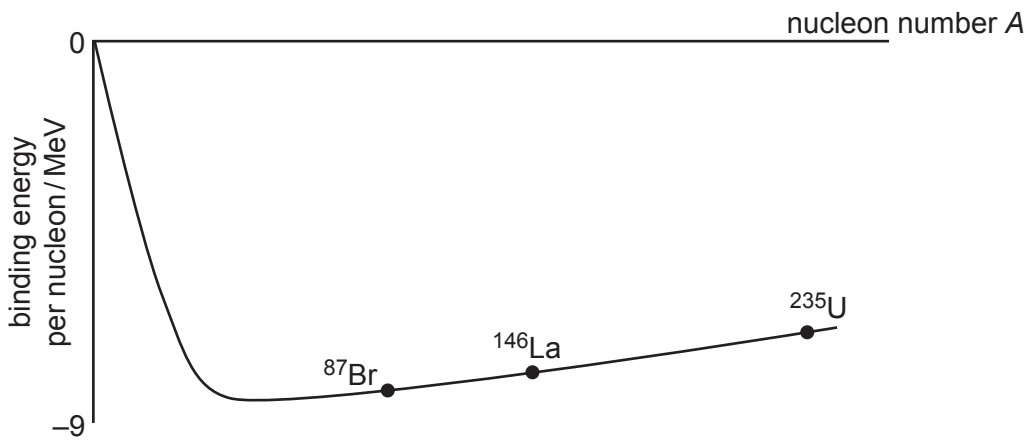

Fig. 2.1

Use the graph to explain why energy is released in the reaction.

.....

.....

.....

.....

..... **[2]**

© OCR 2018

(c) Each fission reaction releases about 16 MeV. Calculate the mass change in a single reaction.

mass change = ... kg **[3]**

(d) Each year, fission reactors around the world produce about 1.4×10^{18} J of useful energy. Use the data below to calculate an estimate of the time uranium reserves will last at the **current** rate of energy production. Suggest and explain why such an estimate may be inaccurate.

estimated mass of ^{235}U available = 1.6×10^{8} kg
mass of ^{235}U atom = 3.9×10^{-25} kg.
efficiency of power stations = 30%

time uranium reserves will last = ... years

.....

.....

.....

.....

.....

..... **[4]**

© OCR 2018

3 This question is about beta radiation from the decay of potassium-40 ($^{40}_{19}K$) in bananas.

(a) An average banana contains about 5×10^{-4} kg of potassium. About 0.012% of this potassium is the beta-emitting isotope, potassium-40.

Show that a single banana will have an activity in the range 10 – 20 Bq.

The mass of one mole of potassium-40 is 0.040 kg.

Potassium-40 decays with half-life 1.3×10^{9} years (4.1×10^{16} s).

[4]

(b) The average energy of the beta particles emitted by potassium-40 is 8.3×10^{-14} J.

Show that the equivalent dose received over 20 years by a 70 kg person who eats two bananas every week is about 10 mSv. Assume that all the ingested potassium-40 remained in the body during that time. The quality factor of beta radiation is 1.

[5]

© OCR 2018

(c) The risk of contracting cancer is about 5% per sievert. Calculate an estimate of the number of cancers produced in a population of 60 million over a period of twenty years from this equivalent dose.

[1]

(d) The amount of potassium-40 in the body is maintained at a steady level of about 2.0×10^{-5} kg for a 70 kg adult. The excess is excreted.

Suggest and explain one reason why the Government should **not** recommend that people should limit the number of bananas they eat on the basis of radiation risk.

.....

.....

.....

.....

..... **[2]**

© OCR 2018

SECTION B

Answer **all** the questions.

4 This question is about objects falling in a gravitational field.

(a) In 1589, the Italian physicist Galileo Galilei is said to have dropped different masses from the top of the Leaning Tower of Pisa (Fig. 4.1) to show that all objects accelerate towards the Earth at the same rate.

Fig. 4.1

(i) The height of the Leaning Tower is 56 m. Calculate the time for a mass to fall to the ground when released from rest at the top of the tower. Ignore the effects of air resistance.

time = ... s **[2]**

(ii) Explain why two objects of different masses dropped from the top of the tower should accelerate at the same rate if air resistance is ignored.

.....

.....

.....

.....

.....

..... **[2]**

© OCR 2018

(b) If Galileo had used two objects with very different masses, he would have observed that they did not both fall with the same acceleration. The air exerts a drag force on falling objects, decreasing their acceleration.

Taking into account the effects of drag, the acceleration a of an object falling through air at velocity v can be modelled using the equation

$$a = 9.81\,\text{m s}^{-2} - Kv^2 \quad \text{where } K \text{ is a constant for the object.}$$

(i) The motion of a falling object, taking account of drag forces, can be modelled iteratively as shown below:

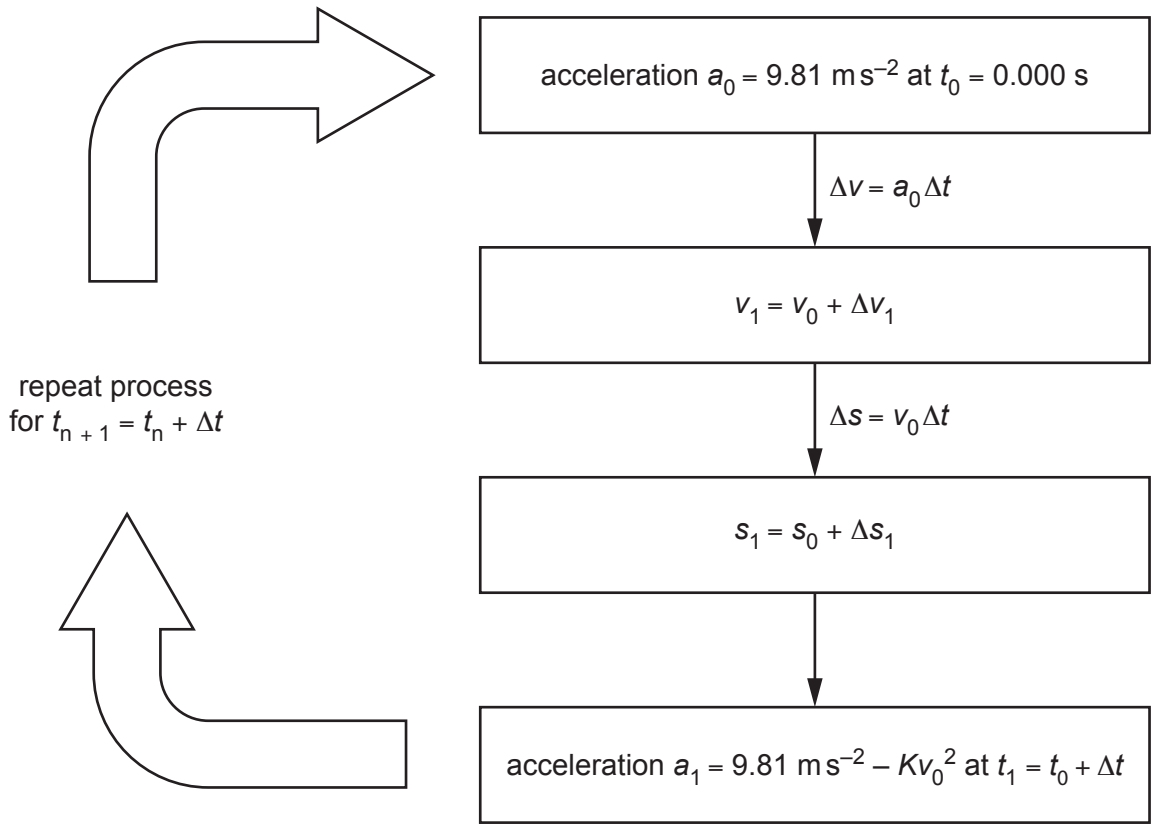

Fig. 4.2

The table below is for a ball with $K = 3.40 \times 10^{-3}\,\text{m}^{-1}$, using $\Delta t = 0.200$ s. Complete the table.

n	t/ s	a/ m s^{-2}	Δv/ m s^{-1}	v/ m s^{-1}	Δs/ m	s/ m
0	0.000	9.81	–	0.00	–	0.00
1	0.200	9.81	1.96	1.96	0.00	0.00
2	0.400					

[3]

© OCR 2018

(ii)* Further iterations of the calculation produce the graph in Fig. 4.3.

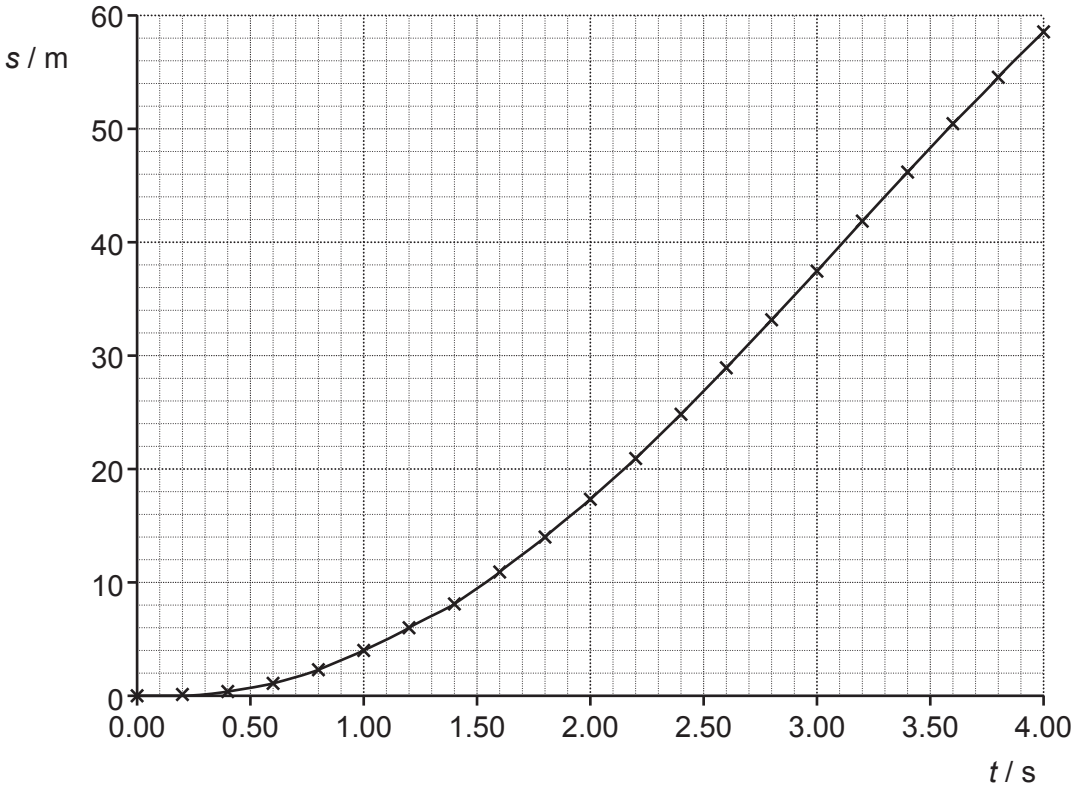

Fig. 4.3

Use data from the graph to estimate the time for this ball to fall from the top of the Leaning Tower to the ground.

Explain why the model may not give an accurate result and how the model could be improved.

Compare your estimate with your value from **(a)(i)** and use this to suggest and explain whether observers in 1589 would have been able to distinguish between the time of fall of relatively similar masses from the top of the tower. **[6]**

.....

.....

.....

.....

.....

.....

.....

.....

© OCR 2018

© OCR 2018

5 This question is about determining the diameter of the atomic nucleus.

(a) In 1909, a team led by Ernest Rutherford fired alpha particles at a thin sheet of gold. Most of the alpha particles passed through the sheet with little deflection but about one alpha particle in ten thousand 'bounced back'.

(i) Explain why such scattering experiments are carried out in a vacuum.

.....

.....

.....

.....

.....

..... **[3]**

(ii) We can assume that the alpha particles come to rest for an instant at the point where the electrical potential energy of the particle is equal to the kinetic energy of the particle at a large distance from the nucleus.

Calculate the distance of closest approach of a 4.5 MeV alpha particle ($^{4}_{2}He$) to a gold nucleus ($^{197}_{79}Au$) and explain why the use of more energetic alpha particles would result in a different value for the radius of the gold nucleus.

distance of closest approach = ... m

.....

.....

.....

.....

..... **[3]**

© OCR 2018

(b) Accelerated electrons can also be scattered by atomic nuclei.

The electrons are diffracted by the nuclei giving a minimum at angle θ where $\sin\theta = \frac{1.2\lambda}{d}$ and d is the diameter of the nucleus and λ is the de Broglie wavelength of the electrons.

(i) Show that the velocity of an electron accelerated through 1.5×10^8 V is very close to the velocity of light.

rest energy of electron = 0.51 MeV

[4]

(ii) Calculate the angle of the diffraction minimum for a beam of electrons accelerated through 1.5×10^8 V scattered from a nucleus of diameter 3.0×10^{-14} m.

For relativistic particles, momentum = $\frac{E}{c}$ where E is the energy of the particle and c is the velocity of light.

minimum angle = ... ° **[4]**

© OCR 2018

(c) Electron scattering experiments show that the radius r of a nucleus of nucleon number A is proportional to $\sqrt[3]{A}$.

This relationship suggests that the radius of a silver nucleus ($^{107}_{47}Ag$) is about four-fifths the radius of the gold nucleus. However, calculations similar to those in **(a)(ii)** suggest that the maximum radius of the silver nucleus is smaller than this.

Use the relationship $r \propto \sqrt[3]{A}$ to calculate the ratio $\frac{\text{radius of a silver atom}}{\text{radius of a gold atom}}$ and show that it is significantly greater than the ratio given by the closest approach method used in **(a)(ii)**.

[4]

© OCR 2018

6 This question is about conduction in metals and in semiconductors.

(a) A copper wire of length 1.5 m and radius 2.5×10^{-4} m has a resistance of 0.13 Ω at 20 °C. Calculate the conductivity of copper at this temperature.

conductivity at 20 °C = ... $S\,m^{-1}$ **[3]**

(b) A simple model of conduction suggests that each copper atom in the wire contributes one or more electrons to a cloud of free electrons that behave rather like particles in a gas. These electrons drift through the wire under the influence of an electric field.

The current I is given by the equation $I = nave$ where:

n is the number of free electrons in the material per m^3
a is the cross-sectional area of the wire
v is the drift velocity of the electrons
e is the electronic charge.

Calculate the drift velocity of the electrons when the copper wire in part **(a)** carries a current of 2.3 A. The number of free electrons per m^3 in copper = $8.5 \times 10^{28}\,m^{-3}$

drift velocity = ... $m\,s^{-1}$ **[2]**

© OCR 2018

(c)* The conductivity σ of semiconductors such as ntc thermistors increases dramatically with temperature T. The relationship is given by the equation

$$\sigma = C\,e^{-E/kT}$$

where C is a constant, k is the Boltzmann constant and E is the energy required to ionise an atom in the semiconductor.

Use the relationships given in the question to explain the effect of increasing temperature on the conductivity of metals and semiconductors, referring to the microscopic structure of the materials. No calculations are required. **[6]**

.....

.....

.....

.....

.....

.....

.....

.....

.....

.....

.....

.....

.....

.....

.....

.....

.....

.....

.....

.....

.....

© OCR 2018

.....

.....

.....

.....

.....

© OCR 2018

SECTION C

Answer **all** the questions.

This section is based on the Advance Notice article, which is an insert.

7 In 1905, Einstein explained the photoelectric effect using the equation

maximum kinetic energy of photoelectrons emitted from a surface = $hf - \phi$

where h is the Planck constant, f is the frequency of light incident on the surface and ϕ is the work function of the surface. Fig. 7.1 shows this relationship for the metal rubidium.

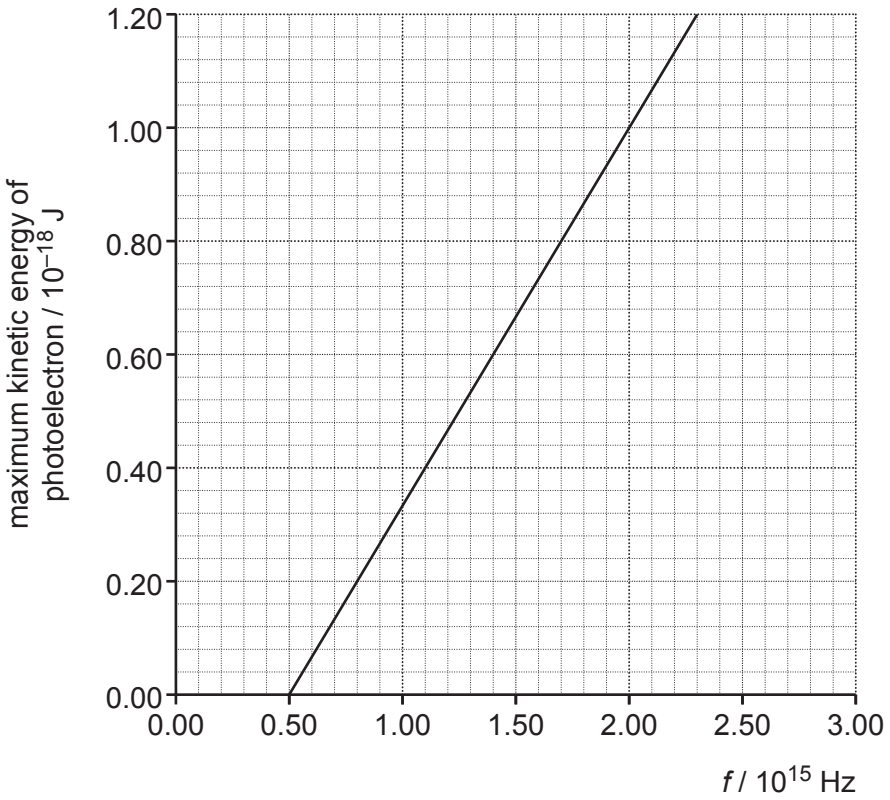

Fig. 7.1

(a) **(i)** Use the graph in Fig. 7.1 to find the work function of the metal.

work function = ... J **[2]**

© OCR 2018

(ii) Explain the meaning of the term *work function* and explain why Einstein's equation gives the **maximum** kinetic energy of the electrons emitted for a particular frequency of incident light (lines 14 – 17 in the Article).

.....

.....

.....

..... **[2]**

(b) Add a second line to the graph of Fig. 7.1 for a metal surface with a work function which is double that of the work function for rubidium. **[2]**

© OCR 2018

8* The upper surface of a solar cell is represented in Fig. 8.1.

Use ideas about superposition of waves to explain why a transparent layer of silicon monoxide about 100 nm thick reduces the amount of reflection of light of wavelength 613 nm and increases the efficiency of the solar cell (lines 29 – 30 in the Article). **[6]**

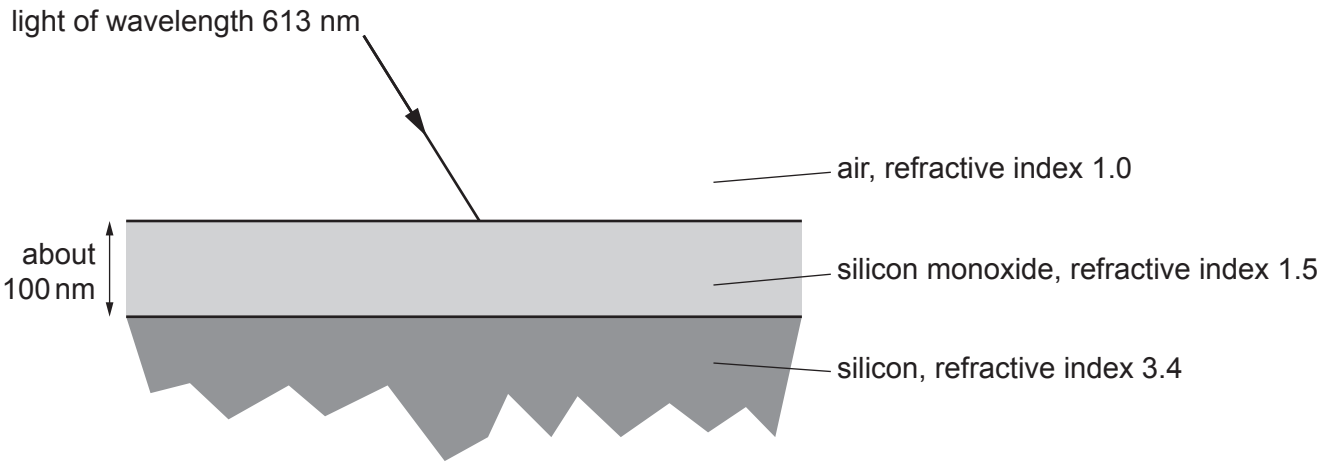

Fig. 8.1

.....

.....

.....

.....

.....

.....

.....

.....

.....

.....

.....

.....

.....

.....

.....

.....

© OCR 2018

.....

.....

.....

.....

.....

.....

.....

.....

.....

.....

© OCR 2018

9 This question is about the effect of the gravitational slingshot on the motion of the Juno space probe (lines 45 – 57 in the Article).

Fig. 9.1 shows a simplified situation in which a space probe of mass *m* sweeps around a planet of mass *M*.

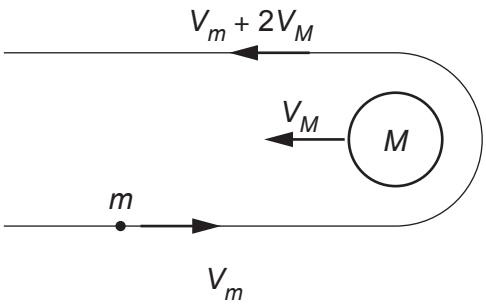

Fig. 9.1

(a) Show that the change in momentum of the space probe = 2 m ($V_m + V_M$).

[2]

(b) The planet has a much greater mass than the space probe. Use the principle of conservation of momentum to describe the effect that the slingshot will have on the motion of the planet.

.....

.....

.....

.....

.....

.....

..... **[2]**

© OCR 2018

(c) Use the data below to show that the Juno probe has sufficient energy per kg to move from 1 AU to 5.2 AU after its gravitational slingshot (see lines 58 – 60 in the Article).

mass of Sun = 2.0×10^{30} kg
1 AU = 1.5×10^{11} m
velocity of Juno after slingshot = 4.2×10^{4} m s^{-1}

[4]

© OCR 2018

10 Solar Impulse 2 recharges its batteries during the day as it climbs from 1500 m to 8500 m. The solar cells produce an output power of 62.1 kW.

Use data from page 3 of the Article to show that the energy produced by the solar cells over eight hours of daylight is sufficient to lift the plane from 1500 m to 8500 m and fully recharge the batteries.

Make your reasoning clear.

[4]

© OCR 2018

11 The intensity of solar radiation at 1 AU from the Sun is 1.4 kW m^{-2}. At a distance of 5.2 AU from the Sun, the solar cells on the Juno probe produce a power of 500 W. Use data from page 4 of the Article to calculate an estimate of the efficiency of the solar cells.

efficiency = ... % **[3]**

END OF QUESTION PAPER

© OCR 2018

ADDITIONAL ANSWER SPACE

If additional space is required, you should use the following lined page(s). The question number(s) must be clearly shown in the margin(s).

© OCR 2018

© OCR 2018

OCR
Oxford Cambridge and RSA

Copyright Information

OCR is committed to seeking permission to reproduce all third-party content that it uses in its assessment materials. OCR has attempted to identify and contact all copyright holders whose work is used in this paper. To avoid the issue of disclosure of answer-related information to candidates, all copyright acknowledgements are reproduced in the OCR Copyright Acknowledgements Booklet. This is produced for each series of examinations and is freely available to download from our public website (www.ocr.org.uk) after the live examination series.

If OCR has unwittingly failed to correctly acknowledge or clear any third-party content in this assessment material, OCR will be happy to correct its mistake at the earliest possible opportunity.

For queries or further information please contact the Copyright Team, First Floor, 9 Hills Road, Cambridge CB2 1GE.

OCR is part of the Cambridge Assessment Group; Cambridge Assessment is the brand name of University of Cambridge Local Examinations Syndicate (UCLES), which is itself a department of the University of Cambridge.

© OCR 2018