Oxford Cambridge and RSA

A Level Physics B (Advancing Physics)

H557/03 Practical skills in physics

Thursday 29 June 2017 – Morning

Time allowed: 1 hour 30 minutes

You must have:
- the Data, Formula and Relationships Booklet (sent with general stationery)

You may use:
- a scientific or graphical calculator
- a ruler (cm/mm)

First name	
Last name	

Centre number						Candidate number				

INSTRUCTIONS
- Use black ink. You may use an HB pencil for graphs and diagrams.
- Complete the boxes above with your name, centre number and candidate number.
- Answer **all** the questions.
- Write your answer to each question in the space provided. If additional space is required, use the lined page(s) at the end of this booklet. The question number(s) must be clearly shown.
- Do **not** write in the barcodes.

INFORMATION
- The total mark for this paper is **60**.
- The marks for each question are shown in brackets **[ ]**.
- Quality of extended responses will be assessed in questions marked with an asterisk (*).
- This document consists of **24** pages.

© OCR 2017 [601/4745/4]
DC (RW/SW) 155724/7 **R**
OCR is an exempt Charity

SECTION A

Answer **all** the questions.

1 This question is about using a thermistor in a temperature sensing circuit.
The graph, Fig. 1.1, shows how the resistance *R* of a thermistor varies with temperature *T*.

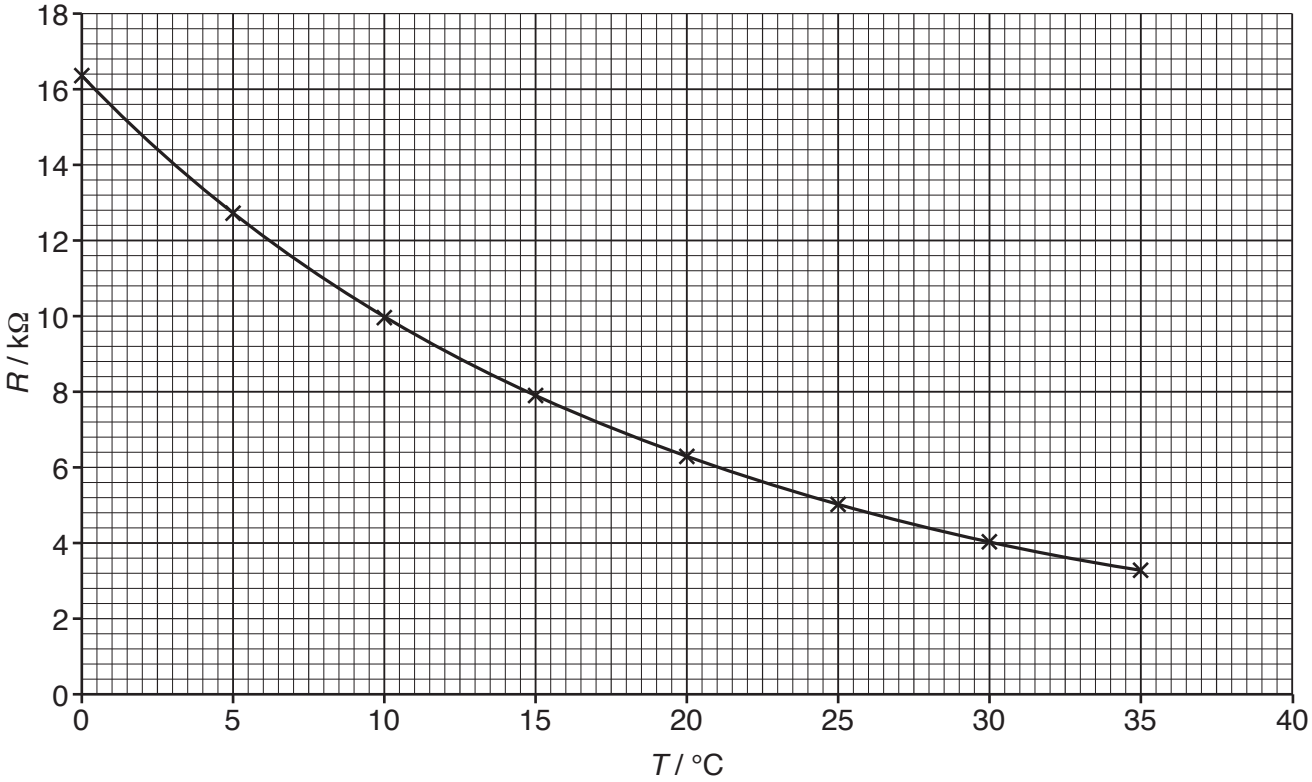

Fig. 1.1

(a) The resistance of the thermistor can be measured with a multimeter on the resistance range. Suggest how you might vary and measure the temperature of the thermistor so that the data, for Fig. 1.1, could be collected.

.....

.....

.....

..... **[2]**

© OCR 2017

The thermistor is used in the potential divider shown in Fig. 1.2.

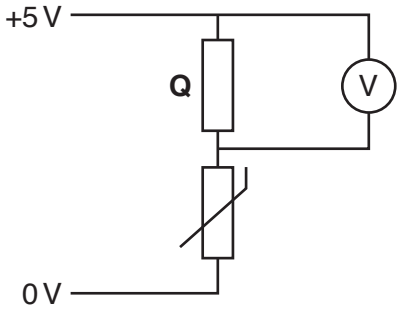

Fig. 1.2

(b) Suggest why the voltmeter is connected across the fixed resistor **Q** rather than the thermistor in this temperature sensing circuit.

.....

.....

..... **[1]**

© OCR 2017

(c) Readings of voltage V_{out} against temperature T are recorded using an analogue voltmeter. The uncertainty in the voltmeter readings is ± 0.1 V and the uncertainty in the temperature readings is ± 1 °C. The data is shown in Fig. 1.3 in the form of a graph.

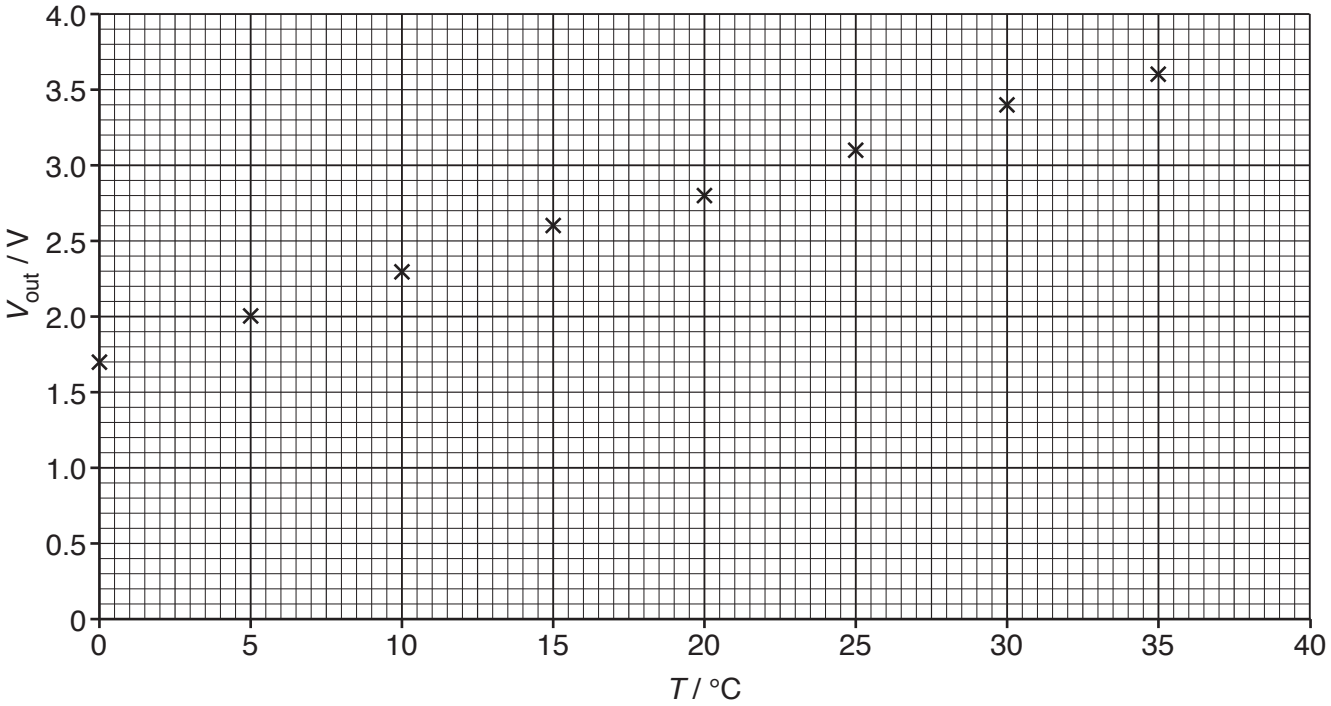

Fig. 1.3

(i) It is suggested that V_{out} varies linearly with T. By adding uncertainty bars to Fig. 1.3 use the graph to show that this is true over the temperature range tested. State your reasoning.

.....

.....

.....

..... **[3]**

(ii) Explain how you could calibrate the analogue voltmeter scale to read temperature directly.

.....

.....

.....

..... **[2]**

© OCR 2017

(d)* Discuss the effect of changing the fixed resistor **Q** to a higher **and** a lower value on the performance of the temperature sensing circuit over the range of temperatures 0 – 35 °C. Use data from Fig. 1.1 and Fig. 1.3 to perform calculations to support your ideas.

.....

.....

.....

.....

.....

.....

.....

.....

.....

.....

.....

.....

.....

.....

.....

.....

.....

.....

.....

.....

.....

.....

.....

.....

.....

..... **[6]**

© OCR 2017

BLANK PAGE

PLEASE DO NOT WRITE ON THIS PAGE

© OCR 2017

2 This question is about the behaviour of a mass on a spring.

(a) The table below shows how the extension x of a spring varies as the mass m suspended vertically from it alters.

m / g	x / cm
100	2.5
200	5.1
300	7.5
400	9.9
500	12.5
600	15.0

Fig. 2.1

(i) Apply a test to the data to see if the extension of the spring is proportional to the applied force. Explain your method and state your conclusion.

[3]

(ii) Calculate the spring constant k of this spring.
$g = 9.8\,\text{N}\,\text{kg}^{-1}$

k = ... $\text{N}\,\text{m}^{-1}$ **[1]**

© OCR 2017

(b) In order to investigate the behaviour of an oscillating mass and spring system, the spring is suspended vertically below a vibration generator. A mass is added to the bottom of the spring. The arrangement is suspended above an ultrasound distance sensor as shown in Fig. 2.2.

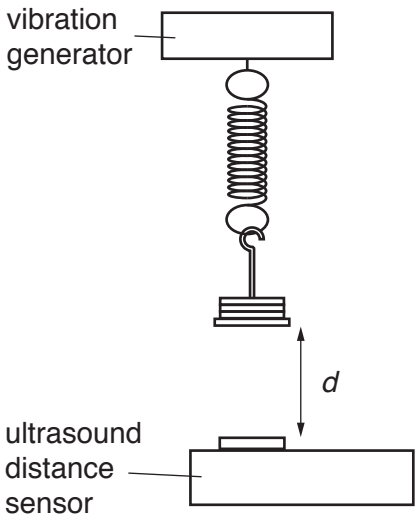

Fig. 2.2

With the vibration generator switched off, the mass is given a small vertical displacement then released. A few oscillations later the ultrasound distance sensor is started and the trace shown in Fig. 2.3 is displayed on a computer.

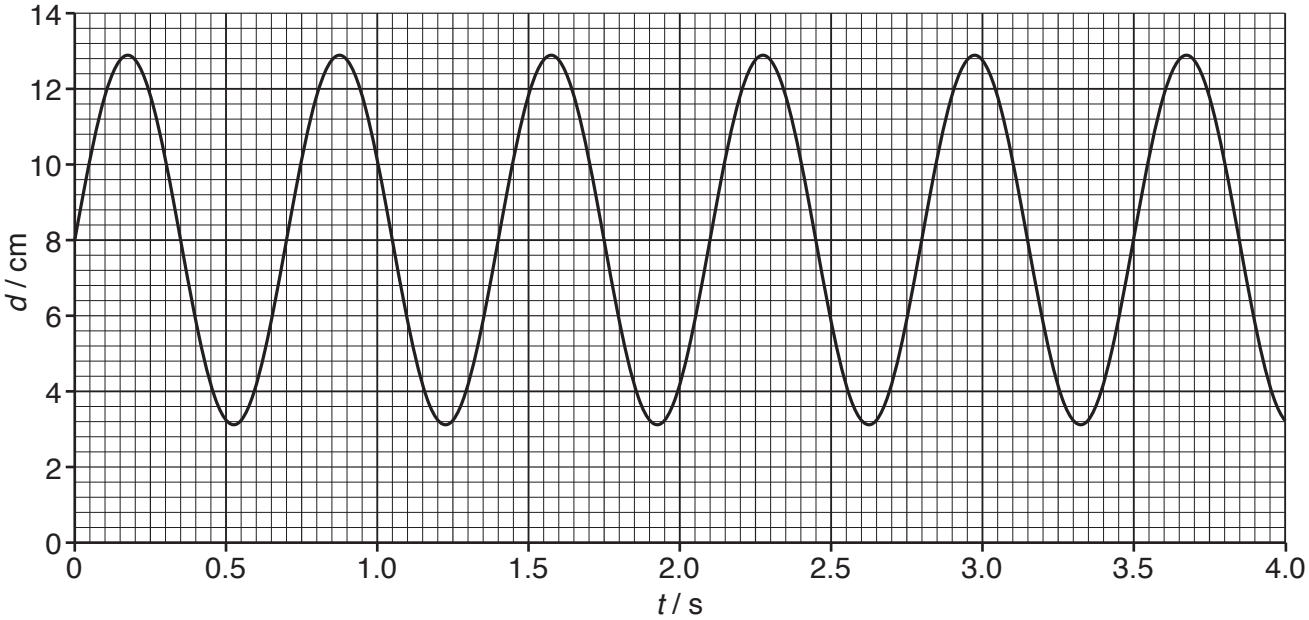

Fig. 2.3

(i) Mark **two** points on the curve shown in Fig. 2.3, to indicate where the speed of the oscillating mass is at its maximum. Label each point with a letter **V**. **[1]**

© OCR 2017

(ii) Use data from the trace shown in Fig. 2.3 to calculate the natural frequency *f* of the mass and spring system.

f = ... Hz **[2]**

(iii) Show that the mass *m* supported by the spring is about 500 g.

[2]

© OCR 2017

(c)* By connecting the vibration generator to a signal generator it is possible to use this apparatus to investigate forced oscillations of the mass and spring system. Describe in as much detail as possible how you would carry out the investigation, the data that you would record and what you would expect the results to show.

.....

.....

.....

.....

.....

.....

.....

.....

.....

.....

.....

.....

.....

.....

.....

.....

.....

.....

.....

.....

.....

.....

.....

.....

..... **[6]**

© OCR 2017

3 This question is about the measurement of the **B**-field between a pair of slab magnets.
Fig. 3.1 shows the arrangement of the apparatus used in the experiment. It consists of a pair of slab magnets, with opposite poles facing one another, fixed onto a piece of U-shaped soft iron. The magnet assembly sits on top of an electronic balance. A rigidly fixed wire is shaped to carry a current I between the magnetic poles. The force created alters the balance reading.

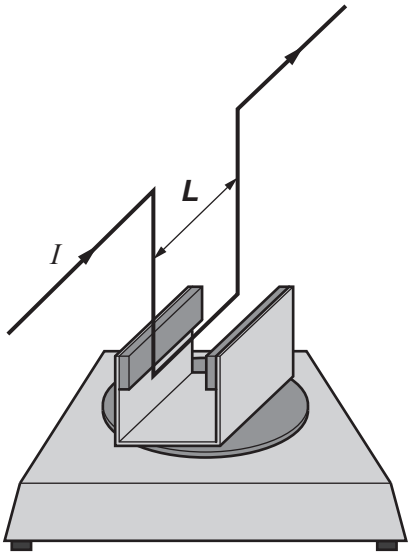

Fig. 3.1

Fig. 3.2 shows a section through the magnet assembly. The dot in the centre represents the wire.

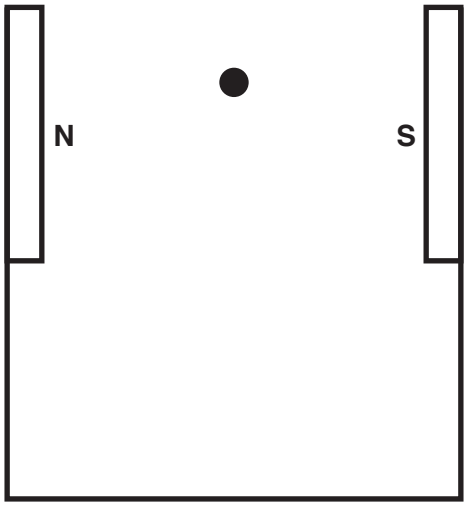

Fig. 3.2

(a) **(i)** Draw, on Fig. 3.2, at least **three** lines to represent the magnetic field in the region between the magnetic poles when the current in the wire is zero. **[2]**

(ii) Explain why the balance reading changes to a new value when the wire carries a current.

.....

.....

..... **[2]**

© OCR 2017

(b) The longest length of wire that could be used is 5.0 cm. The current I is varied and the change in the balance reading is recorded as shown in Fig. 3.3.

	Change in balance reading / g				
I / A	**Trial 1**	**Trial 2**	**Trial 3**	**Mean change / g**	**F / ×10^{-3} N**
0.5	0.08	0.05	0.06	0.06	0.59
1.0	0.14	0.16	0.16	0.15	1.5
1.5	0.22	0.20	0.23	0.22	2.2
2.0	0.31	0.29	0.31	0.30	2.9
2.5	0.38	0.39	0.35		
3.0	0.44	0.48	0.48		

Fig. 3.3

(i) Complete the table by calculating the mean change in balance reading and the corresponding values of force F for the last two current values.
$g = 9.8\,\text{N kg}^{-1}$ **[2]**

(ii) Use the table to determine the uncertainty in F. Explain your reasoning.

[2]

© OCR 2017

(iii) Plot the last two points from the table, Fig. 3.3, on the graph Fig. 3.4. Draw a line of best fit. **[2]**

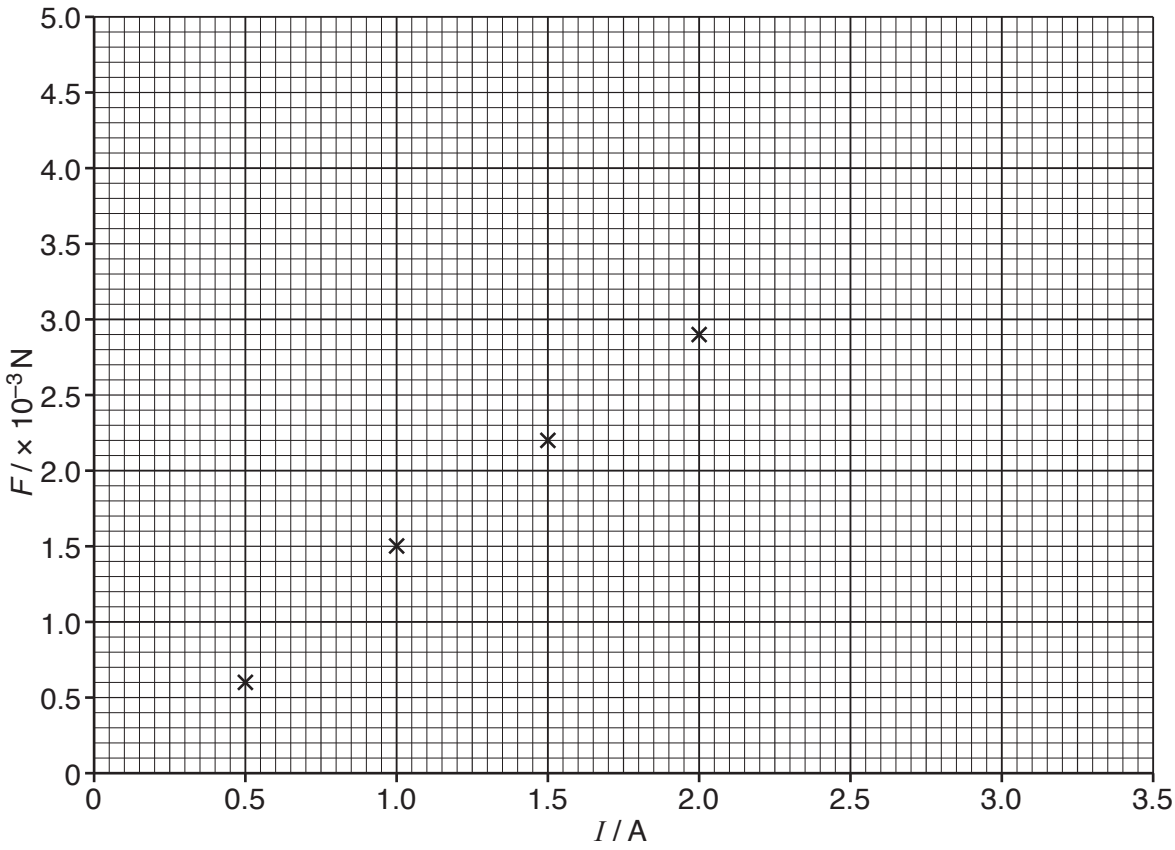

Fig. 3.4

(iv) Use the graph to estimate the value of the **B**-field between the faces of the slab magnets.

B = ... mT **[3]**

© OCR 2017

BLANK PAGE

PLEASE DO NOT WRITE ON THIS PAGE

© OCR 2017

SECTION B

Answer **all** the questions.

4 This question is about determining the focal length of a converging lens using the apparatus shown in Fig. 4.1.

(a) *u* is the distance between the lens and the object and *v* is the distance between the lens and the image.

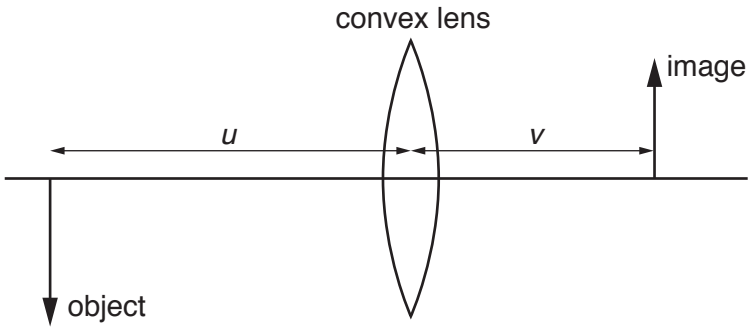

Fig. 4.1

Fig. 4.2 shows some data taken by a student.

u **/ m ± 1 mm**	***v*** **/ m ± 5 mm**
−0.500	0.220
−0.475	0.230
−0.450	0.230
−0.425	0.240
−0.400	0.250
−0.375	0.260
−0.350	0.270
−0.325	0.290
−0.300	0.310
−0.275	0.340
−0.250	0.390
−0.225	0.480
−0.200	0.660

Fig. 4.2

(i) State which measurement, *u* or *v*, has the greatest absolute uncertainty and suggest why this is the case.

.....

.....

.....

..... **[1]**

© OCR 2017

To assess the reliability of the experiment, the student decided to repeat one measurement (with value of u equal to −0.250) multiple times. These data are shown below in Fig. 4.3 in a dot-plot, the points at 0.330 and 0.430 are potential outliers.

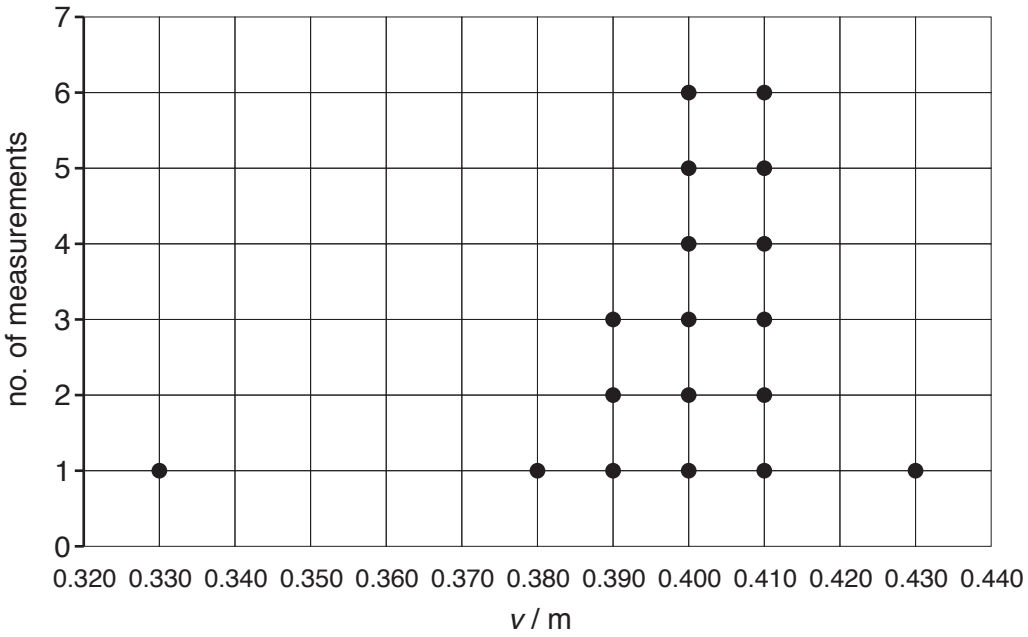

Fig. 4.3

(ii) Ignoring the two potential outliers, calculate the range of the typical values on the dot-plot.

range = ... m **[1]**

(iii) Calculate the mean of the values within the range calculated in **(a)(ii)**. Mark this on the dot-plot above.

mean = ... m **[2]**

© OCR 2017

(iv) The spread of data is given by; *spread* = ± ½ *range*. A measurement can be considered to be an outlier if it is more than twice the spread from the mean. State whether you consider either of the points; 0.330 or 0.430 to be outliers and explain your reasoning.

[2]

© OCR 2017

(b) Fig. 4.4 shows a plot of magnification *m* against *v* for the data from Fig. 4.2. The last two points are missing from the graph. The uncertainties are too small to be shown on this graph.

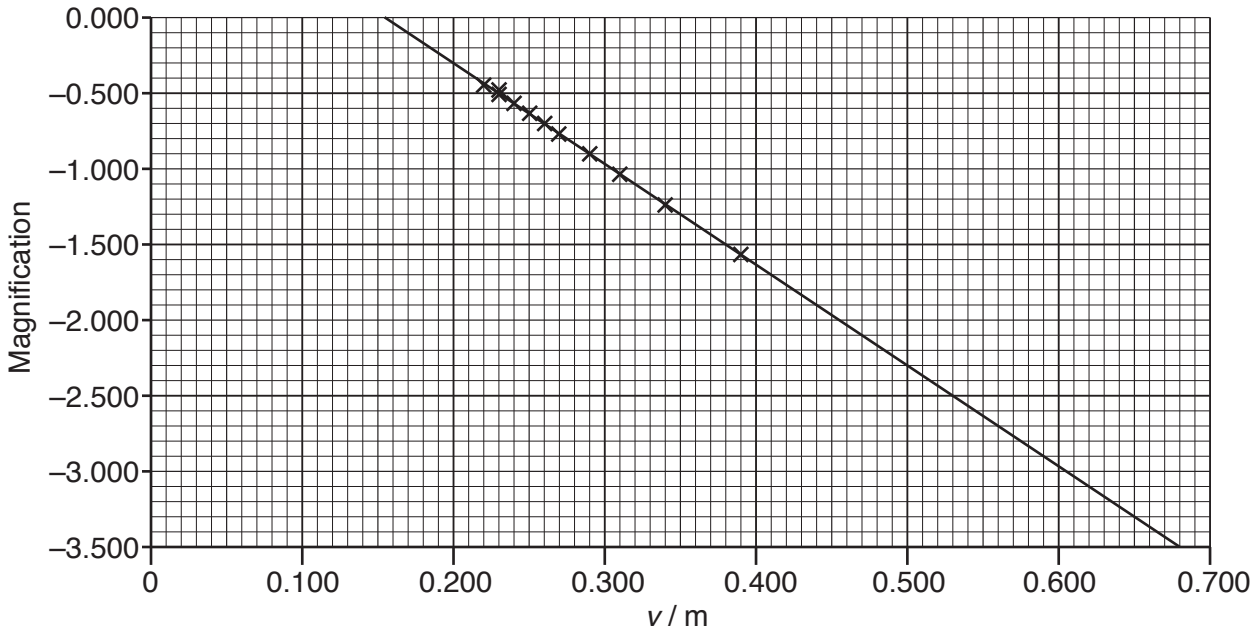

Fig. 4.4

(i) The last two points from Fig. 4.2 have not been plotted. Complete Fig. 4.5 below, adding the last two magnification values.

u **/ m**	***v*** **/ m**	***m***
−0.225	0.480	
−0.200	0.660	

Fig. 4.5 **[2]**

(ii) Add the remaining points to the graph. **[1]**

© OCR 2017

(iii) Use $\frac{1}{v} = \frac{1}{u} + \frac{1}{f}$ to show that $m = -\frac{v}{f} + 1$.

[2]

(iv) Use data from the graph to calculate the focal length f of the lens.

f = ... m **[2]**

© OCR 2017

(c) A second converging lens of different focal length is used to form an image. Data for the second lens is displayed in Fig. 4.6.

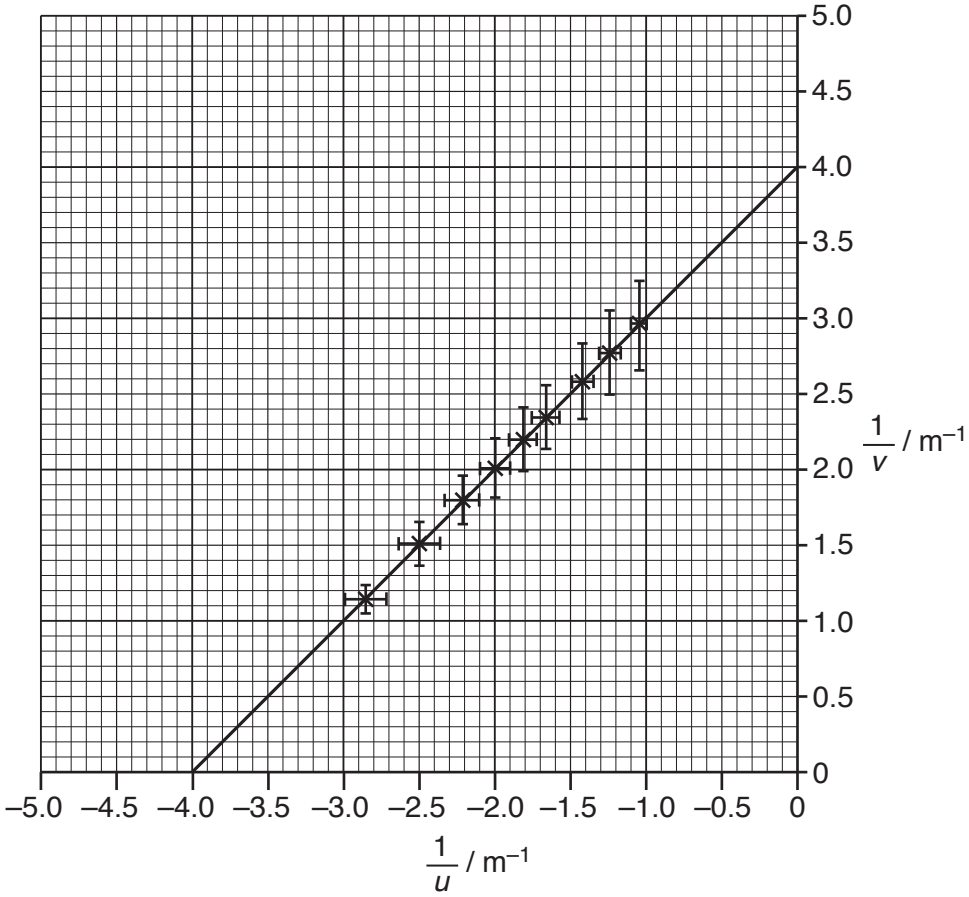

Fig. 4.6

(i) Use Fig. 4.6 to determine the power of this lens.

Power = ... dioptre **[1]**

© OCR 2017

(ii) Use the uncertainty bars on Fig. 4.6 to determine the maximum and minimum values for the power of the lens. Use these values to determine the percentage uncertainty in the power of the lens.

Maximum power value = ... dioptre

Minimum power value = ... dioptre

Percentage uncertainty = ... %

[4]

END OF QUESTION PAPER

© OCR 2017

ADDITIONAL ANSWER SPACE

If additional space is required, you should use the following lined page(s). The question number(s) must be clearly shown in the margin(s).

© OCR 2017

© OCR 2017

OCR
Oxford Cambridge and RSA

Copyright Information

OCR is committed to seeking permission to reproduce all third-party content that it uses in its assessment materials. OCR has attempted to identify and contact all copyright holders whose work is used in this paper. To avoid the issue of disclosure of answer-related information to candidates, all copyright acknowledgements are reproduced in the OCR Copyright Acknowledgements Booklet. This is produced for each series of examinations and is freely available to download from our public website (www.ocr.org.uk) after the live examination series.

If OCR has unwittingly failed to correctly acknowledge or clear any third-party content in this assessment material, OCR will be happy to correct its mistake at the earliest possible opportunity.

For queries or further information please contact the Copyright Team, First Floor, 9 Hills Road, Cambridge CB2 1GE.

OCR is part of the Cambridge Assessment Group; Cambridge Assessment is the brand name of University of Cambridge Local Examinations Syndicate (UCLES), which is itself a department of the University of Cambridge.

© OCR 2017