OCR
Oxford Cambridge and RSA

Accredited

A Level Physics A
H556/02 Exploring physics
Sample Question Paper

Date – Morning/Afternoon
Version 2.0

Time allowed: 2 hours 15 minutes

You must have:
- the Data, Formulae and Relationships Booklet

You may use:
- a scientific or graphical calculator

First name	
Last name	
Centre number	
Candidate number	

SPECIMEN

INSTRUCTIONS
- Use black ink. You may use an HB pencil for graphs and diagrams.
- Complete the boxes above with your name, centre number and candidate number.
- Answer **all** the questions.
- Where appropriate, your answers should be supported with working. Marks may be given for a correct method even if the answer is incorrect.
- Write your answer to each question in the space provided.
- Additional paper may be used if required but you must clearly show your candidate number, centre number and question number(s).
- Do **not** write in the bar codes.

INFORMATION
- The total mark for this paper is **100**.
- The marks for each question are shown in brackets **[ ]**.
- Quality of extended responses will be assessed in questions marked with an asterisk (*).
- This document consists of **32** pages.

SECTION A

You should spend a maximum of 20 minutes on this section.

Answer **all** the questions.

1 To find the density ρ of a metal wire, a student makes the following measurements:

length $l = 100 \pm 1$ mm
diameter $d = 2.50 \pm 0.05$ mm
mass $m = 4.00 \pm 0.02$ g

The equation $\rho = \dfrac{4m}{\pi d^2 l}$ is used to calculate the density of the metal.

What is the percentage uncertainty in the answer?

A ± 2.5%

B ± 3.5%

C ± 4.5%

D ± 5.5%

Your answer ☐

[1]

2 A copper wire is connected across a cell. The conduction electrons within the copper wire move.

Which statement is correct about these electrons?

A They drift towards the negative end of the cell.

B They have random speeds because of collisions with other electrons.

C They travel through the wire at the speed of light.

D They collide with vibrating copper ions.

Your answer ☐

[1]

SPECIMEN

3 A resistor **R**, an ammeter and a switch are connected in series to a battery.

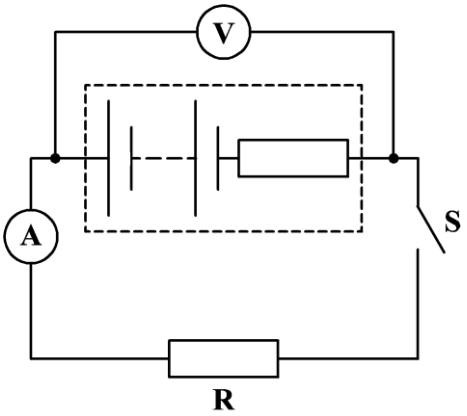

The switch **S** is open. The voltmeter reading is 9.0 V and the ammeter reading is zero.
With **S** closed, the voltmeter reading is 6.0 V and ammeter reading is 2.0 A.

What is the internal resistance of the battery?

A 1.5 Ω

B 3.0 Ω

C 4.5 Ω

D 6.0 Ω

Your answer ☐

[1]

4 Which of the following statements is/are true about photons?

1 All photons travel at the same speed in a vacuum.

2 Photons have no charge.

3 The energy of a photon depends only on its frequency.

A 1, 2 and 3

B Only 2 and 3

C Only 1 and 2

D Only 2

Your answer ☐

[1]

SPECIMEN

5 Electrons travelling through a thin layer of polycrystalline metal are diffracted.

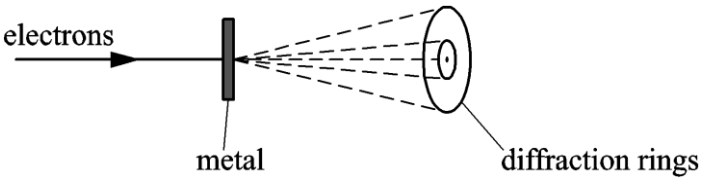

Which statement is correct about these electrons?

A The electrons travel as photons through the metal.

B The electrons have a wavelength of about 10^{-10} m.

C The electrons are diffracted by holes in the metal.

D The electrons repel each other to produce the diffraction.

Your answer ☐

[1]

6 A sodium lamp is rated at 40 W. About 12% of the power is emitted as yellow light of wavelength 5.9×10^{-7} m.

How many photons of yellow light are emitted per second from this lamp?

A 1.4×10^{19} s^{-1}

B 1.2×10^{20} s^{-1}

C 3.6×10^{27} s^{-1}

D 1.0×10^{40} s^{-1}

Your answer ☐

[1]

SPECIMEN

7 A 14 V d.c. supply is used to charge a 12 V car battery of internal resistance 0.80 Ω for 6.0 hours. The current in the circuit is 2.5 A.

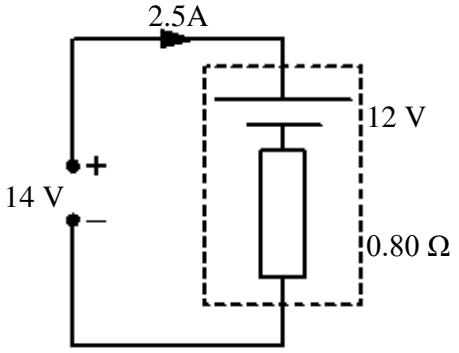

How much electrical energy is provided by the charging supply?

A 13 kJ

B 110 kJ

C 650 kJ

D 760 kJ

Your answer ☐

[1]

8 The electric potential is -1.2×10^{-4} J C^{-1} at a point 1.2×10^{-5} m from an isolated electron. An α-particle $^{4}_{2}He$ passes through this point.

What is the magnitude of the electric potential at the mid-point between the α-particle and the electron at this instant?

A -7.2×10^{-4} J C^{-1}

B $+2.4 \times 10^{-4}$ J C^{-1}

C $+4.8 \times 10^{-4}$ J C^{-1}

D $+7.2 \times 10^{-4}$ J C^{-1}

Your answer ☐

[1]

SPECIMEN

9 A coil with three turns of wire is used in an experiment.
The graph shows the variation of magnetic flux linkage with time t for this coil.

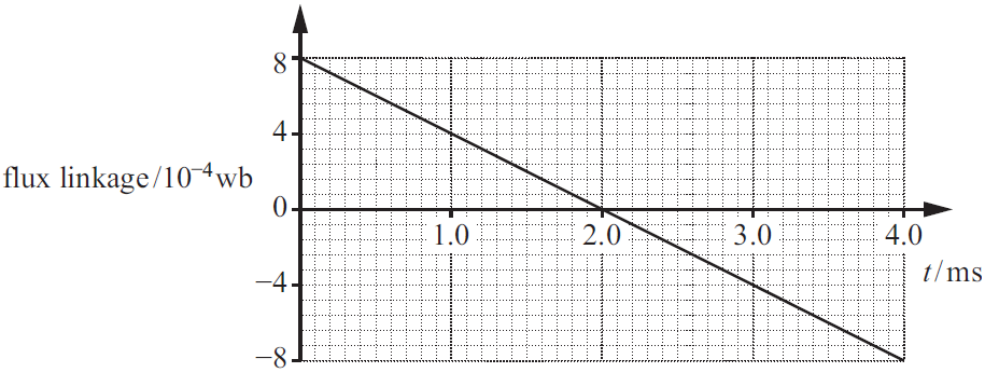

What is the e.m.f. induced across the ends of the coil?

A 0 V

B 0.20 V

C 0.40 V

D 1.2 V

Your answer ☐

[1]

10 A graph of binding energy per nucleon against nucleon number is shown below.

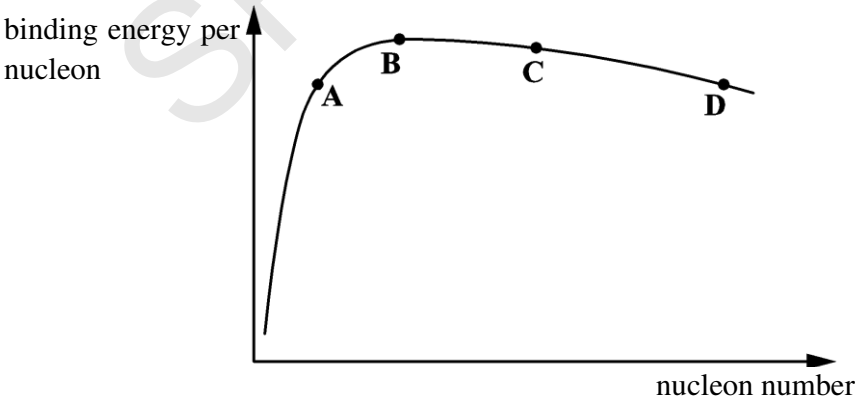

Which nucleus, **A**, **B**, **C**, or **D**, shown on the graph has the largest magnitude of binding energy?

Your answer ☐

[1]

SPECIMEN

11 A radiographer in a hospital directs a parallel beam of X-rays at the leg bone of a patient. The attenuation (absorption) coefficient of bone is 0.7 cm^{-1}.

The answers below are given to one significant figure.
What is the percentage intensity of X-rays transmitted through bone of thickness 0.7 cm?

A 0 %

B 40 %

C 50 %

D 60 %

Your answer ☐

[1]

12 When a nucleus of uranium-238 absorbs a neutron, one combination of fission products can be tin-126 and a nucleus of element **X**. 13 neutrons are also emitted.

$$^{238}_{92}\mathrm{U} + {}^{1}_{0}\mathrm{n} \rightarrow \mathbf{X} + {}^{126}_{50}\mathrm{Sn} + 13\,{}^{1}_{0}\mathrm{n}$$

How many neutrons are there in the nucleus of element **X**?

A 30

B 42

C 58

D 100

Your answer ☐

[1]

SPECIMEN

13 The potential difference across the cathode and the anode of an X-ray tube is V. The minimum wavelength of the X-ray photons emitted from the tube is λ_o.

Which of the following statements is/are correct?

1 λ_o is halved when V is doubled.

2 λ_o is unchanged when the temperature of the cathode is increased.

3 λ_o is independent of the cathode material.

A 1, 2 and 3

B Only 2 and 3

C Only 1 and 2

D Only 2

Your answer ☐

[1]

14 Two leptons are emitted when a down quark decays into an up quark.

Which of the following is correct about this decay?

	force responsible for the decay	**leptons emitted**
A	strong nuclear	positron and antineutrino
B	weak nuclear	positron and neutrino
C	strong nuclear	electron and neutrino
D	weak nuclear	electron and antineutrino

Your answer ☐

[1]

SPECIMEN

15 A rigid loop of insulated wire is placed in a uniform magnetic field of flux density 80 mT. The current in this loop is 0.50 A and the angle between the wire and the direction of the magnetic field is 30°.

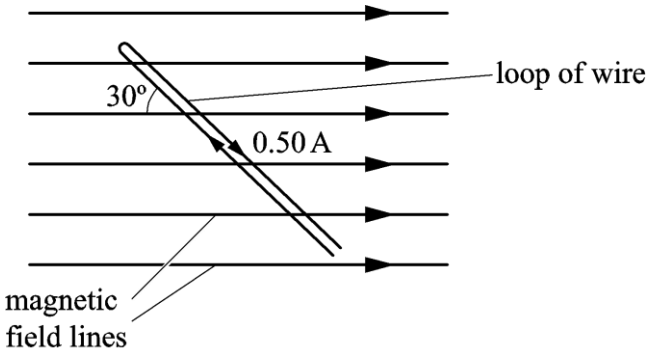

What is the magnitude of the force experienced by a 1.0 cm section of the loop?

A 0 N

B 2.0×10^{-4} N

C 3.5×10^{-4} N

D 4.0×10^{-4} N

Your answer ☐

[1]

SPECIMEN

SECTION B

Answer **all** the questions.

16 A student uses the circuit shown in **Fig. 16.1** to determine the resistivity of a metal in the form of a wire.

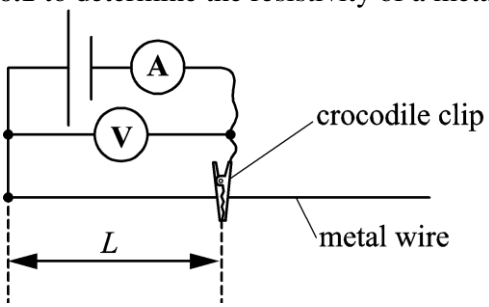

Fig. 16.1

The length L of the wire is changed with the help of a crocodile clip. The current in the wire is I, the p.d. across the wire is V and the wire has resistance R.
The table in **Fig. 16.2** shows the results recorded by the student from the experiment.

L / m	V / V	I / A	R / Ω
0.050	0.40	0.160	2.50
0.200	0.40	0.140	2.86
0.400	0.40	0.072	
0.800	0.40	0.036	11.1
1.000	0.40	0.029	13.8

Fig. 16.2

Fig. 16.3 shows the graph of R against L for this wire.

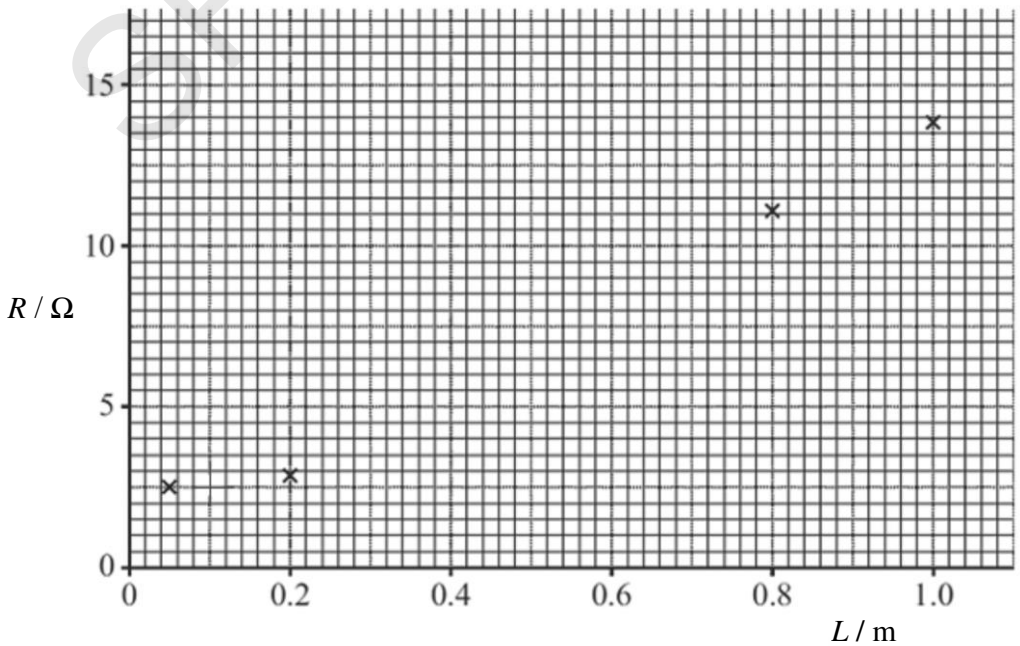

Fig. 16.3

SPECIMEN

(a) Complete the table by calculating the resistance of the wire of length 0.400 m. On **Fig. 16.3** plot the data point corresponding to this length.

[1]

(b) The student observed that the wire was significantly hotter when the shortest length $L = 0.050$ m was used.
The cross-sectional area of the wire is 8.0×10^{-8} m^2.

Use **Fig. 16.3** to determine the resistivity of the metal.

resistivity = **.....** Ω m **[3]**

(c) The voltmeter used in the experiment had a zero error. The potential difference recorded in the experiment was larger than it should have been.

Discuss how the actual value of the resistivity of the metal would differ from the value calculated in **(b)**.

.....

.....

.....

.....

.....

..... **[3]**

SPECIMEN

17 **(a)** **Fig. 17.1** shows a resistor and a diode connected in series to a cell.

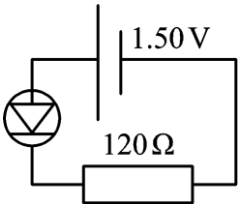

Fig. 17.1

The resistor has resistance 120 Ω. The cell has e.m.f. 1.50 V and negligible internal resistance. The potential difference across the diode is 0.62 V.

Calculate the total power dissipated in the circuit.

power = ... W **[3]**

(b) A student designs a circuit to vary the brightness of a filament lamp. The circuit is shown in **Fig. 17.2**.

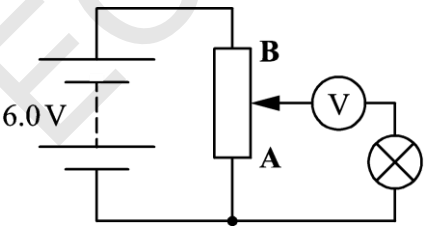

Fig. 17.2

The circuit is set up. Moving the slider from **A** to **B** changes the voltmeter reading from 0 V to 6.0 V but the lamp stays off. The lamp is not faulty.

Explain the observations above and refine the circuit design so that the brightness of the lamp can be varied as the slider is moved from **A** to **B**.

.....

.....

.....

.....

..... **[3]**

SPECIMEN

(c)* **Fig. 17.3** shows how the resistance of a thermistor varies with temperature.

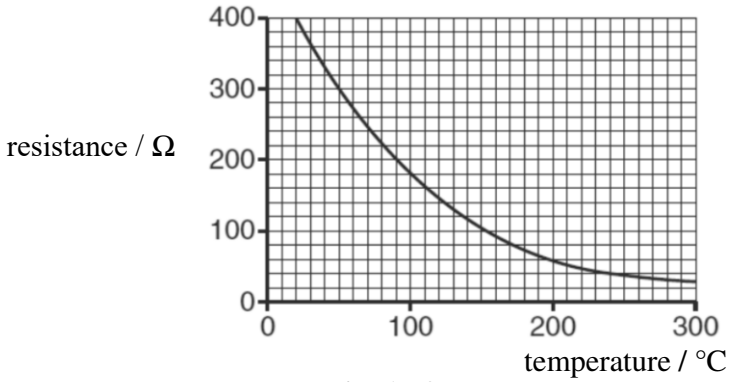

Fig. 17.3

Fig. 17.4 shows a potential divider circuit which uses this thermistor. The circuit is designed to monitor the changes in the temperature of an oven in the range 200 °C to 300 °C.

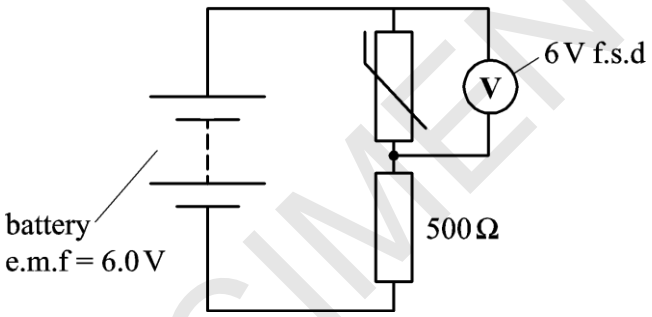

Fig. 17.4

The voltmeter has very high resistance and has a full scale deflection (f.s.d.) of 6.0 V.

Explain how the circuit works and use calculations to discuss a significant limitation of this design.

[6]

.....

.....

.....

.....

.....

.....

.....

.....

.....

.....

SPECIMEN

.....

.....

.....

.....

.....

Additional answer space if required.

.....

.....

.....

.....

.....

.....

.....

.....

.....

.....

.....

.....

SPECIMEN

BLANK PAGE

Question 18 begins on page 16

SPECIMEN

18 A guitar manufacturer wants to investigate the quality of sound produced from a new uniform polymer string. **Fig. 18.1** shows the string which is kept in tension between a clamp and a pulley. The frequency of the mechanical oscillator close to one end is varied so that a stationary wave is set up on the string.

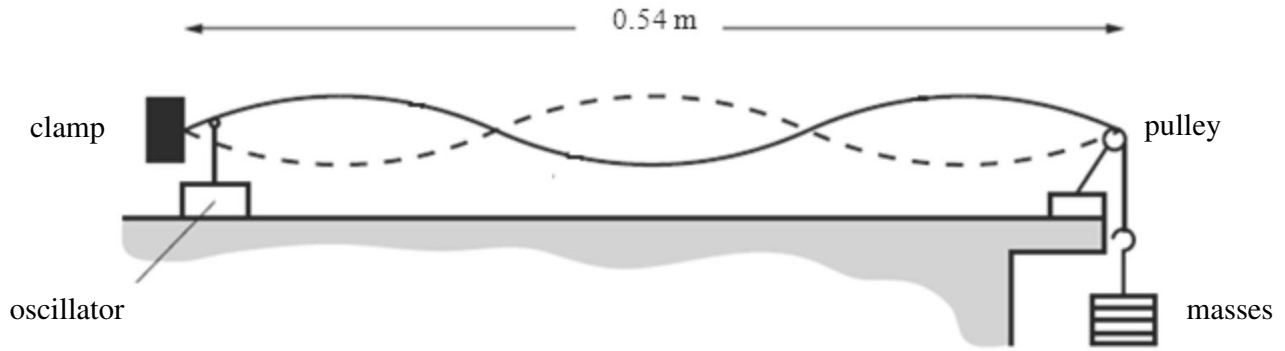

Fig. 18.1

(a) Explain how the stationary wave is formed on this stretched string.

.....

.....

.....

..... **[2]**

(b) The frequency of the oscillator is 60 Hz.

Use Fig. **18.1** to calculate the speed of the transverse waves on the string.

speed = ... m s^{-1} **[3]**

SPECIMEN

(c) The speed v of the transverse waves on the string is directly proportional to $\sqrt{T}$, where T is the tension in the string.
The tension T in the string is increased by 14 %. The frequency f of the oscillator is adjusted to get the same stationary wave pattern as **Fig. 18.1**.

Calculate the percentage increase in the frequency f.

increase = **.....** % **[2]**

SPECIMEN

19 **(a)** State what is meant by the *photoelectric effect*.

.....

.....

..... **[1]**

(b) The photoelectric effect cannot be explained in terms of the wave-model of electromagnetic waves. Discuss how the new knowledge of the particulate nature of radiation was used by physicists to validate the photon model.

.....

.....

.....

.....

..... **[3]**

(c) A metal plate is placed in an evacuated chamber. Electromagnetic radiation of wavelength 380 nm is incident on the plate. The work function of the metal is 1.1 eV.

(i) Calculate the maximum speed of the photoelectrons emitted from the plate.

speed = ... m s^{-1} **[3]**

(ii) State the change, if any, to the maximum speed of the emitted photoelectrons when the intensity of the incident electromagnetic radiation on the metal plate is doubled.

.....

.....

.....

..... **[1]**

SPECIMEN

20 **(a)** **Fig. 20.1** shows a capacitor and a switch connected in series to a cell.

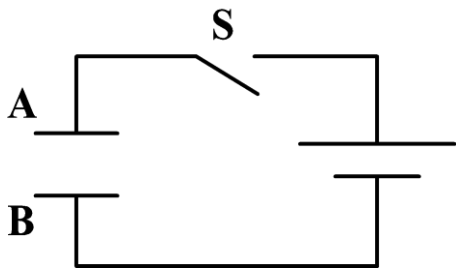

Fig. 20.1

The switch **S** is closed.

Describe and explain how the capacitor plates **A** and **B** acquire opposite charges.

.....

.....

.....

.....

.....

..... **[2]**

(b) **Fig. 20.2** shows an arrangement of capacitors connected to a battery.

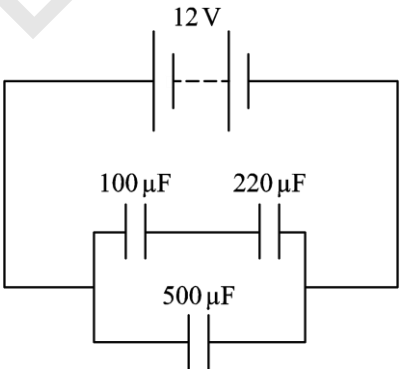

Fig. 20.2

The e.m.f. of the battery is 12 V.

Calculate the total energy *E* stored by the capacitors in this circuit.

E = ... J **[4]**

SPECIMEN

(c) **Fig. 20.3** shows a capacitor-resistor circuit.

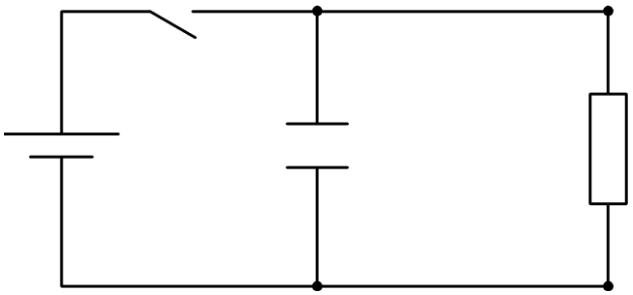

Fig. 20.3

Describe how the time constant of this circuit can be determined experimentally in the laboratory.

……

……

……

……

……

……

……

……

……..... **[3]**

21 **(a)** Describe the similarities and the differences between the gravitational field of a point mass and the electric field of a point charge.

……

……

……

……

……

……

……..... **[3]**

SPECIMEN

(b) **Fig. 21.1** shows two identical negatively charged conducting spheres.

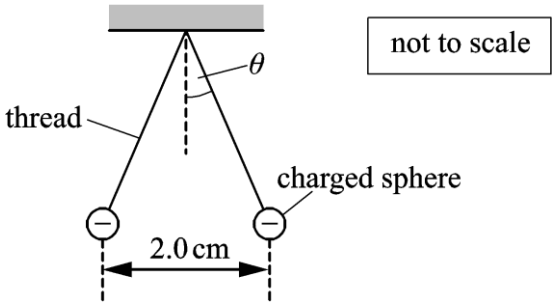

Fig. 21.1

The spheres are tiny and each is suspended from a nylon thread. Each sphere has mass 6.0×10^{-5} kg and charge -4.0×10^{-9} C. The separation between the centres of the spheres is 2.0 cm.

(i) Explain why the spheres are separated as shown in **Fig. 21.1**.

.....

.....

..... **[2]**

(ii) Calculate the angle θ made by each thread with the vertical.

θ = ... ° **[4]**

SPECIMEN

(c) **Fig. 21.2** shows two parallel vertical metal plates connected to a battery.

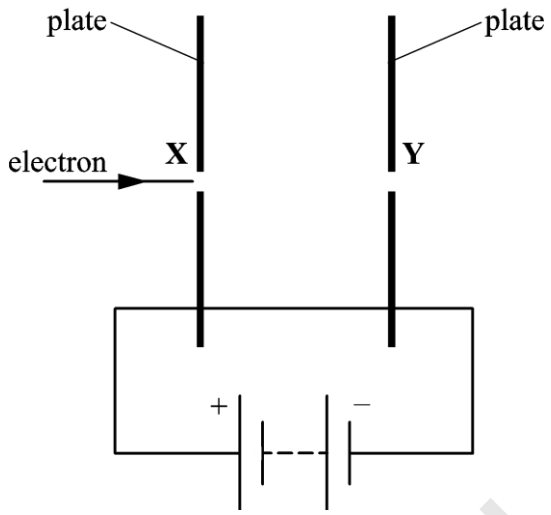

Fig. 21.2

The plates are placed in a vacuum and have a separation of 1.2 cm. The uniform electric field strength between the plates is 1500 V m^{-1}. An electron travels through holes **X** and **Y** in the plates. The electron has a horizontal velocity of 5.0×10^6 m s^{-1} when it enters hole **X**.

(i) Draw five lines on **Fig. 21.2** to represent the electric field between the parallel plates.

[2]

(ii) Calculate the final speed of the electron as it leaves hole **Y**.

speed = ... m s^{-1} **[3]**

SPECIMEN

BLANK PAGE

Question 22 begins on page 22

SPECIMEN

22 **Fig. 22.1** shows the circular track of a positron moving in a uniform magnetic field.

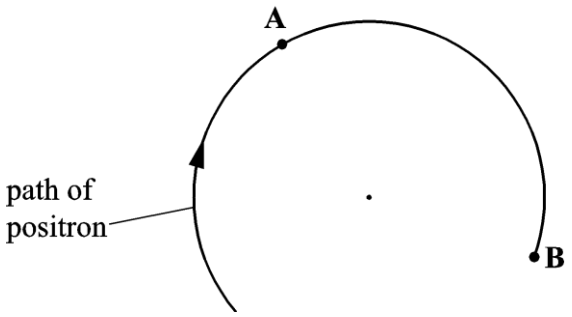

Fig. 22.1

The magnetic field is perpendicular to the plane of **Fig. 22.1**.
The speed of the positron is 5.0×10^7 m s^{-1} and the radius of the track is 0.018 m.

(a) State the direction of the force acting on the positron when at point **A** and explain why this force does **not** change the speed of the positron.

.....

.....

..... **[2]**

(b) Calculate the magnitude of the magnetic flux density of the magnetic field.

magnetic flux density = ... T **[3]**

SPECIMEN

(c) At point **B** the positron interacts with a stationary electron and they annihilate each other. The annihilation process produces two identical gamma photons travelling in opposite directions.

Calculate the wavelength of the gamma photons. Assume the kinetic energy of the positron is negligible.

wavelength = **.....** m **[3]**

SPECIMEN

23 (a)* Lead of different thicknesses can be used to investigate the absorption of gamma photons from a radioactive source.

Fig. 23.1 shows a graph of gamma photon energy against the half-thickness of lead. Half-thickness of lead is the thickness of lead which will reduce the original count-rate by half.

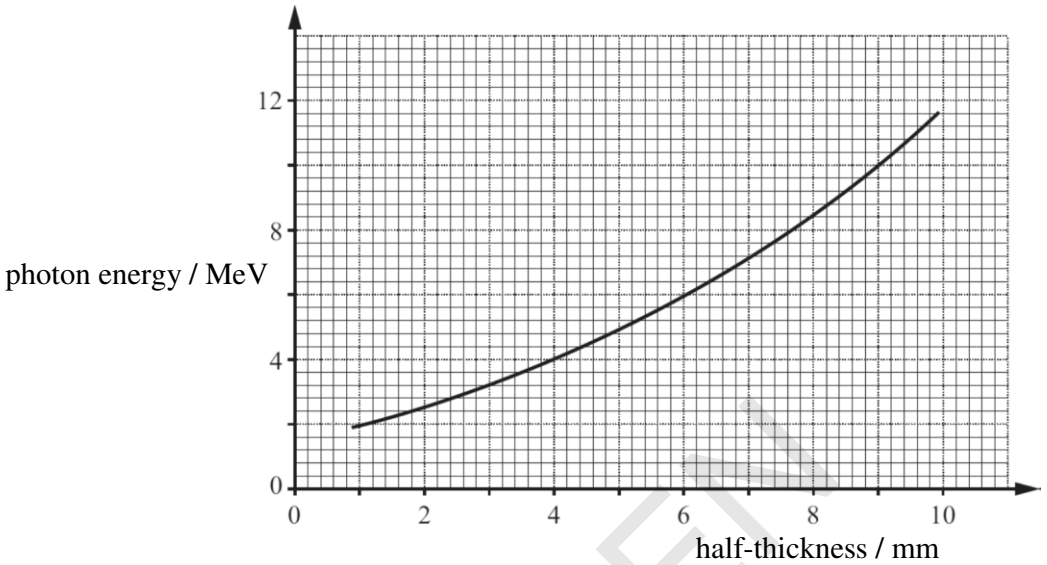

Fig. 23.1

Describe an experiment that can be carried out to determine the half-thickness of lead and how you would use your results with **Fig. 23.1** to determine the energy of a gamma photon from a radioactive gamma source in your laboratory.

Include the equipment used, any safety precautions necessary and how the quality of the results may be improved. **[6]**

.....

.....

.....

.....

.....

.....

.....

.....

.....

.....

SPECIMEN

.....

.....

.....

.....

.....

Additional answer space if required.

.....

.....

.....

.....

.....

.....

.....

.....

.....

.....

.....

.....

SPECIMEN

(b) Fluorodeoxyglucose (FDG) is a radioactive tracer often used for PET scans. It contains radioactive fluorine-18, which is a positron-emitter. Some information about FDG and fluorine-18 is given below.

- 9.9% of the mass of FDG is fluorine-18.
- The half-life of fluorine-18 is 6600 s.
- The molar mass of fluorine-18 is 0.018 kg mol^{-1}.

A patient is injected with FDG. The initial activity of FDG is 400 MBq.

Use the information given to calculate the initial mass of FDG given to the patient.

mass = **.....** kg **[4]**

(c) PET scanners are expensive because they require a near-by or on-site particle accelerator that produces fluorine-18. Discuss the ethical issues this raises in the treatment of patients.

[2]

SPECIMEN

BLANK PAGE

Question 24 begins on page 30

SPECIMEN

24 **(a)** State what is meant by the *piezoelectric effect*.

……

……

…… **[1]**

(b) In an experiment, a beam of ultrasound is directed at the boundary between two materials **A** and **B**. **Fig. 24.1** shows the beam incident at right angles to the boundary between these two materials.

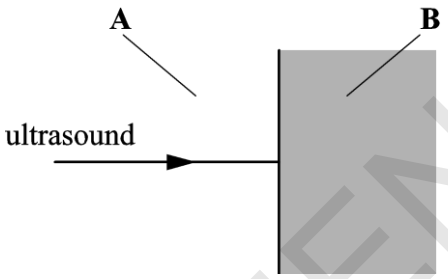

Fig. 24.1

The material **A** is unchanged. The acoustic impedance of material **A** is 2.5×10^6 kg m^{-2} s^{-1}. The material **B** is varied. The acoustic impedance of **B** is Z.
Fig. 24.2 shows the variation with Z of the percentage of reflected intensity of the ultrasound at the boundary.

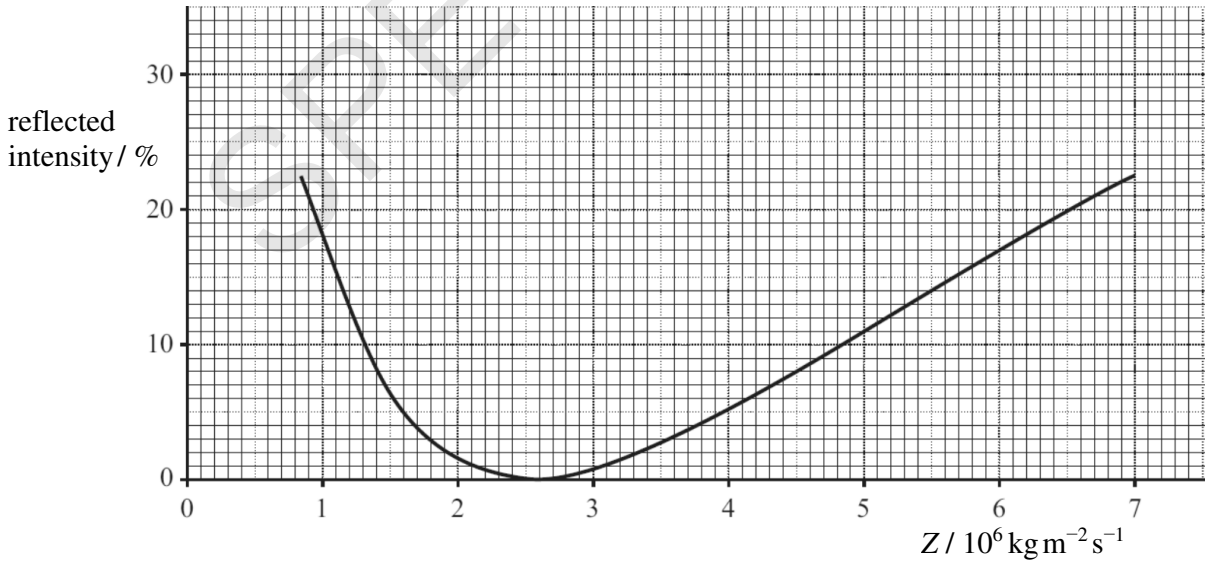

Fig. 24.2

Explain why the curve shown in **Fig. 24.2** has a dip.

……

……

…… **[3]**

SPECIMEN

(c) Describe and explain a method using ultrasound to determine the speed of blood in an artery in an arm. State one major advantage of this technique for the patient.

.....

.....

.....

.....

.....

.....

.....

.....

..... **[4]**

END OF QUESTION PAPER

SPECIMEN

SPECIMEN

Copyright Information:

Q17c: graph of thermistor resistance from previous OCR paper G482 May 2012 © ocr.copyright@ocr.org.uk

Q18: drawing of a stationary wave pattern from previous OCR paper G482 January 2012 © ocr.copyright@ocr.org.uk

OCR is committed to seeking permission to reproduce all third-party content that it uses in the assessment materials. OCR has attempted to identify and contact all copyright holders whose work is used in this paper. To avoid the issue of disclosure of answer-related information to candidates, all copyright acknowledgements are reproduced in the OCR Copyright Acknowledgements booklet. This is produced for each series of examinations and is freely available to download from our public website (www.ocr.org.uk) after the live examination series.

If OCR has unwittingly failed to correctly acknowledge or clear any third-party content in this assessment material, OCR will be happy to correct its mistake at the earliest possible opportunity.

For queries or further information please contact the Copyright Team, First Floor, 9 Hills Road, Cambridge CB2 1GE.

OCR is part of the Cambridge Assessment Group; Cambridge Assessment is the brand name of University of Cambridge Local Examinations Syndicate (UCLES), which is itself a department of the University of Cambridge.