Oxford Cambridge and RSA

Monday 9 June 2025 – Morning

A Level Physics A

H556/02 Exploring physics

Time allowed: 2 hours 15 minutes

You must have:
- the Data, Formulae and Relationships booklet

You can use:
- a scientific or graphical calculator
- a ruler (cm/mm)

Please write clearly in black ink. **Do not write in the barcodes.**

Centre number | | | | | | Candidate number | | | | |

First name(s) _____

Last name *StemUp Model Solution*

INSTRUCTIONS
- Use black ink. You can use an HB pencil, but only for graphs and diagrams.
- Write your answer to each question in the space provided. If you need extra space use the lined pages at the end of this booklet. The question numbers must be clearly shown.
- Answer **all** the questions.
- Where appropriate, your answer should be supported with working. Marks might be given for using a correct method, even if your answer is wrong.

INFORMATION
- The total mark for this paper is **100**.
- The marks for each question are shown in brackets **[ ]**.
- Quality of extended response will be assessed in questions marked with an asterisk (*).
- This document has **32** pages.

ADVICE
- Read each question carefully before you start your answer.

© OCR 2025 [601/4743/X]
DC (ST/CB) 356052/4
OCR is an exempt Charity

stemup.co.uk

Section A

You should spend a maximum of 30 minutes on this section.

Write your answer to each question in the box provided.

1 Which component of a gamma camera absorbs gamma rays and produces visible light?

A collimator

B computer

C photomultiplier tube

D scintillator

Your answer D

[1]

2 What is a reasonable estimate for the diameter of an atom?

A 10^{-15} m

B 10^{-12} m

C 10^{-10} m

D 10^{-7} m

Your answer C

[1]

© OCR 2025

3 The graph below shows the binding energy per nucleon, *E*, for nuclei of different nucleon number, *A*.

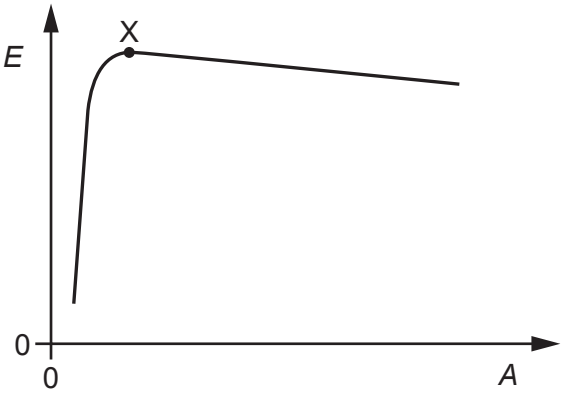

Which of the following statement(s) correctly describe nuclear processes?

1 Fission of nuclei to the right of X releases energy
2 Fusion of nuclei to the left of X releases energy
3 Fission of nuclei to the right of X can happen spontaneously

A Only 1

B Only 2

C Only 2 and 3

D 1, 2 and 3

Your answer D

[1]

4 The current in a copper wire of radius 2.5×10^{-4} m is 1.4 A.

The number density of charge carriers (electrons) in copper is $8.5 \times 10^{28}\,m^{3}$.

What is the mean drift velocity of the electrons in the wire?

A $2.1 \times 10^{-4}\,mm\,s^{-1}$

B $0.13\,mm\,s^{-1}$

C $0.52\,mm\,s^{-1}$

D $1.9\,mm\,s^{-1}$

Your answer C

[1]

© OCR 2025

stemup.co.uk

5 An isotope has a half-life of 243 years.

One sample of this isotope has activity A_1.
A second sample of the same isotope has activity A_2.

What is the ratio: $\frac{\text{mass of isotope in first sample}}{\text{mass of isotope in second sample}}$?

A $243\frac{A_1}{A_2}$

B $\frac{A_1}{243}$

C $\frac{A_1}{A_2}$

D $\frac{A_2}{243}$

Your answer C

[1]

6 A student wants to determine the count-rate from a **beta-emitting** source in the laboratory.

Which procedure would be the best to determine the count-rate?

A Measure the counts over a long period of time

B Place the radiation detector (Geiger tube) about 1 metre away from the source

C Place the source close to a very strong magnet

D Place the source inside a lead box when measuring the counts

Your answer A

[1]

© OCR 2025

7 A cell has electromotive force (e.m.f.) 1.50 V and internal resistance 1.2 Ω. It is connected in a circuit as shown below.

What is the terminal potential difference (p.d.) of the cell in this circuit?

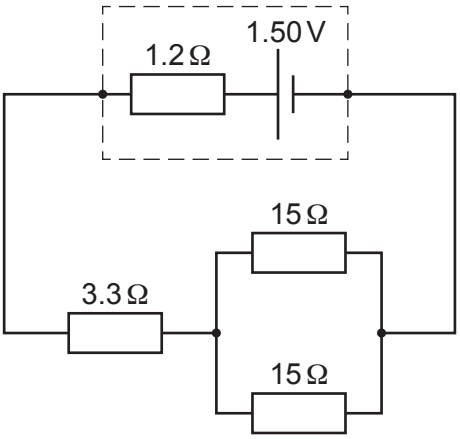

A 0.15 V

B 1.35 V

C 1.50 V

D 1.65 V

Your answer B

[1]

8 A student uses a tube closed at one end to determine the speed of sound. A stationary wave is formed within the tube.

Which of the following quantities can be used to determine the speed of sound in air?

A length of air column in tube, number of antinodes

B length of air column in tube, resonant frequency

C number of nodes, number of antinodes

D number of nodes, resonant frequency

Your answer B

[1]

© OCR 2025

stemup.co.uk

9 The radius R of the nucleus of an unknown isotope with nucleon number is calculated using the formula

$R = r_0 A^{1/3}$, where r_0 is a constant.

The percentage uncertainty in r_0 is ±5%.

The percentage uncertainty in A is ±3%.

What is the percentage uncertainty in R?

A ±2%

B ±4%

C ±6%

D ±8%

Your answer C

[1]

10 The diagrams show representations of a progressive wave.

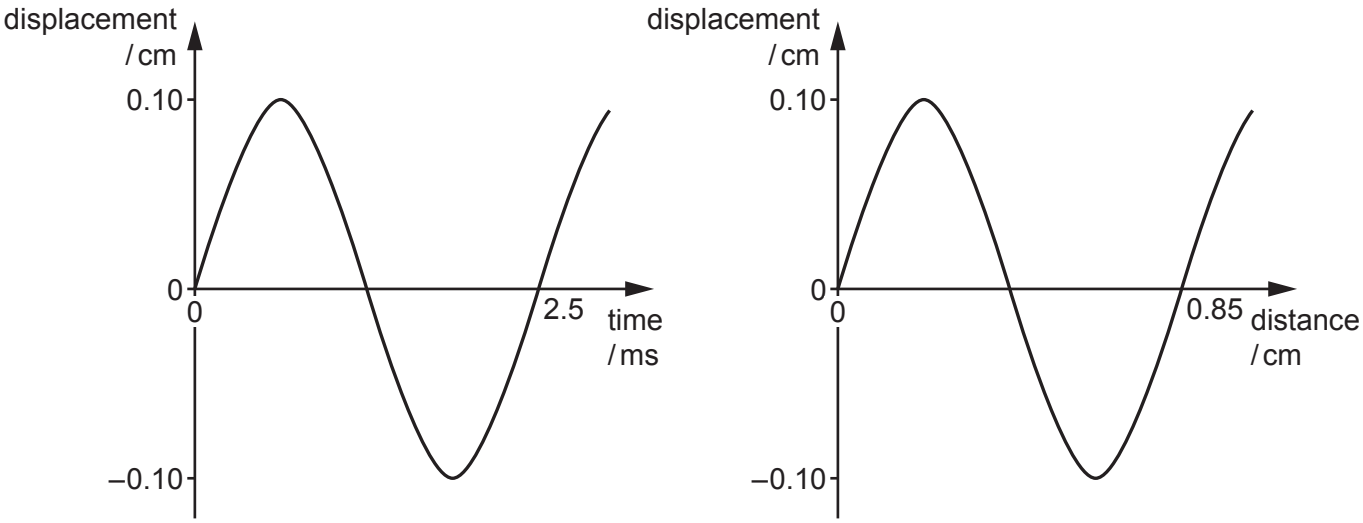

Which row of the table correctly identifies its properties?

	Amplitude / cm	Frequency / Hz
A	0.10	400
B	0.85	2500
C	0.85	400
D	0.10	2500

Your answer A

[1]

© OCR 2025

11 A proton with kinetic energy 1.6×10^{-17} J is travelling at right angles to a magnetic field. The magnetic flux density is 0.050 T.

What is the magnitude of the force on the proton?

A 8.0×10^{-19} N

B 1.1×10^{-15} N

C 2.8×10^{-6} N

D 6900 N

Your answer B

[1]

12 The intensity of the Sun's radiation at the surface of the Earth is 1400 W m^{-2}.

The distance between the centre of the Sun and the surface of the Earth is 1.5×10^{8} km.

How much mass is converted into radiant energy in the Sun in one second?

A 3.5×10^{8} kg

B 1.1×10^{9} kg

C 4.4×10^{9} kg

D 1.3×10^{18} kg

Your answer C

[1]

13 Some physical quantities are scalars and some are vectors.

Which row of the table is correct?

	Vector	**Scalar**
A	Current	Electric field strength
B	Power	Electric potential
C	Electric field strength	Current
D	Electric potential	Power

Your answer C

[1]

© OCR 2025

stemup.co.uk

14 Many types of charged particles can be created in particle accelerators.

The charge on an unknown particle is measured in four different experiments.

Which experimental result for the charge on the particle is impossible?

A 1.6×10^{-19} C

B 2.1×10^{-19} C

C 6.4×10^{-19} C

D 9.6×10^{-19} C

Your answer B

[1]

15 Ultrasound scanning uses waves of a particular type and frequency.

Which row of the table is correct for these waves?

	Type	**Frequency range**
A	Longitudinal	Up to 20 kHz
B	Longitudinal	Above 20 kHz
C	Transverse	Up to 20 kHz
D	Transverse	Above 20 kHz

Your answer B

[1]

© OCR 2025

BLANK PAGE

DO NOT WRITE ON THIS PAGE

© OCR 2025

stemup.co.uk

Section B

16 A student is investigating the behaviour of a light-emitting diode (LED).

They use the circuit below to determine the lowest potential difference (p.d.) at which the LED lights.

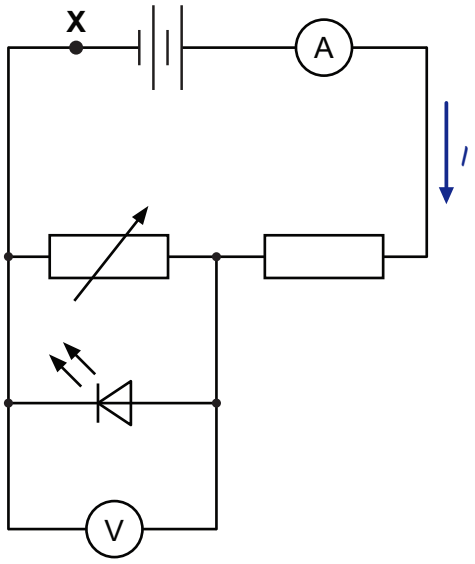

(a) State the name of the circuit arrangement of the battery, variable resistor and resistor in this circuit.

Potential divider (series circuit) **[1]**

(b) Draw an arrow on the circuit to show the direction of conventional current. **[1]**

(c) State how the readings on the ammeter and the voltmeter change when the resistance of the variable resistor is increased.

Ammeter reading decreases

Voltmeter reading increases

[2]

(d) The LED is made from two semiconducting materials.

Compare the number density of charge carriers in semiconductors, metals and insulators.

Metals have the highest number density of charge carriers and insulators the lowest. Semiconductors are in between: higher n than insulators but much lower n than metals. **[2]**

© OCR 2025

(e) This question is about a clockwise circuit loop starting at **X**.

This loop is shown beneath the graph.

Assume the battery has negligible internal resistance. The resistance of the ammeter is also negligible.

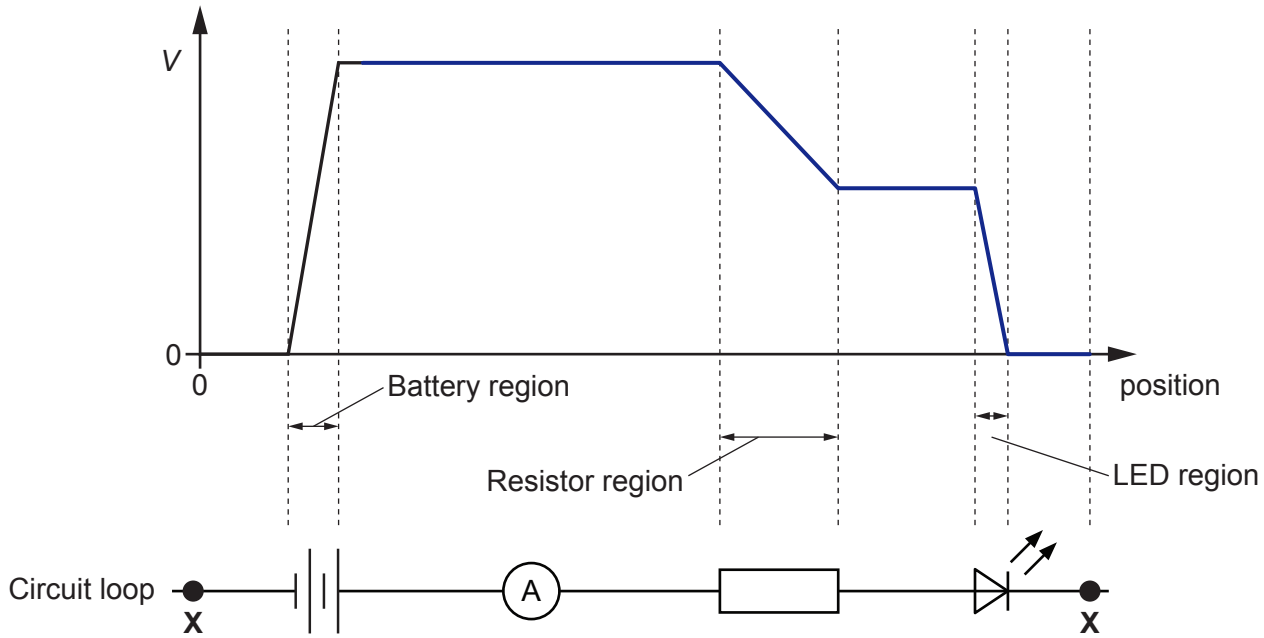

On the axes above this loop, complete the graph to show the variation of the potential difference *V* relative to the point **X** with the position along this loop. **[4]**

© OCR 2025

stemup.co.uk

17* 'Wave-particle duality' refers to the idea that:

- particles, such as electrons, can show behaviour characteristic of waves
- waves, such as visible light, can show behaviour characteristic of particles.

Describe each model.

Describe the experimental evidence that justifies the model.

You do **not** need to describe in detail how the experiments are carried out. **[6]**

Particles as waves: a moving particle such as an electron has a de Broglie wavelength $\lambda = h/p = h/mv$, so it can diffract and interfere like a wave and is not localised at one point.

Evidence: electron diffraction. Electrons passed through thin graphite, where the atomic spacing is similar to their wavelength, give rings on a screen due to constructive and destructive interference, which the particle model cannot explain. A higher accelerating voltage increases p, so λ decreases and the rings get smaller. The pattern still forms at very low intensity, so even single electrons behave as waves.

Waves as particles: light consists of photons, discrete quanta of electromagnetic energy $E = hf$. Energy is transferred in whole photons (one photon to one electron), not continuously.

Evidence: the photoelectric effect. Electrons are emitted only if f is above the threshold frequency; below it there is zero emission however intense the light,

Additional space if required

and increasing intensity has no effect, so the energy transfer is not continuous as the wave model predicts ($hf = \varphi + KE_{max}$). Also an LED gives no light below a threshold p.d., and line spectra show discrete frequencies from discrete energy levels.

© OCR 2025

18 X-rays are used for diagnostic imaging in a hospital.

The diagram shows the structure of an X-ray tube.

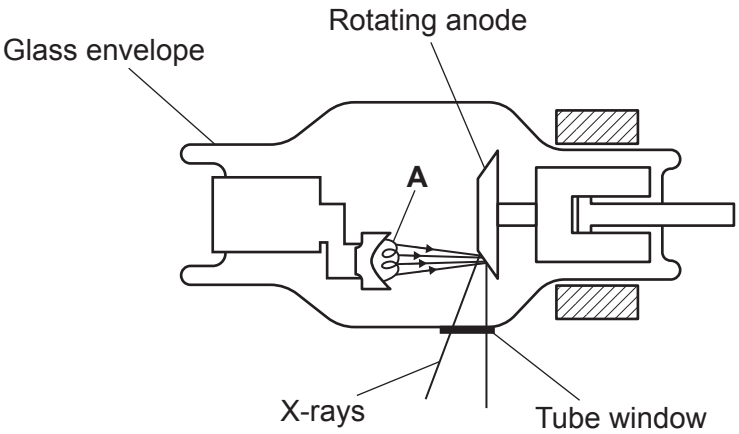

(a) Name the component labelled **A** on the diagram.

Heater (filament / cathode) **[1]**

(b) Suggest why the anode is made to rotate.

To spread the heat over a larger area, cooling the anode so it does not melt. **[1]**

(c) X-rays are produced at characteristic wavelengths which depend on the material of the anode.

Describe how the electrons from component **A** are responsible for producing X-rays.

Electrons from A collide with anode atoms and knock electrons out of inner energy levels. Outer electrons fall to these lower energy levels, emitting characteristic X-ray photons. The electrons also decelerate, giving X-rays. **[2]**

© OCR 2025

stemup.co.uk

(d) An electron strikes the anode. The kinetic energy of the electron changes from 150 keV to 60 keV.

Calculate the minimum wavelength, λ, of the X-ray photon emitted by the interaction of the electron with the anode.

photon energy $E = 150\ keV - 60\ keV = 90\ keV$

$E = 90 \times 10^3 \times 1.60 \times 10^{-19} = 1.44 \times 10^{-14}\ J$

$\lambda = hc/E = (6.63 \times 10^{-34} \times 3.00 \times 10^8) / 1.44 \times 10^{-14}$

$\lambda = 1.38 \times 10^{-11}\ m$

λ = ...1.4×10^{-11}.... m **[3]**

(e) A radiologist targets a uniform beam of X-rays at a tumour 4.6 cm below the skin of a patient. The beam is at right angles to the surface of the skin.

The intensity of the X-ray beam at the tumour is 30% of the incident intensity.

Calculate the attenuation coefficient, μ, of the tumour tissue in cm^{-1}.

$I = I_0\ e^{-\mu x}$ so $0.30 = e^{-\mu \times 4.6}$

$\mu = -\ln(0.30) / 4.6 = 1.204 / 4.6 = 0.262\ cm^{-1}$

μ = ...0.26.... cm^{-1} **[2]**

© OCR 2025

19

(a) Describe the difference between hadrons and leptons.

Hadrons are made of quarks (not fundamental) and experience the strong nuclear force. Leptons are fundamental particles, not made of quarks, and do not experience the strong force. **[2]**

(b) An 'up' quark decays according to the equation below.

$$u \rightarrow d + {}^{0}_{+1}e + \nu$$

Give the name(s) of the lepton(s) in this equation.

positron and (electron) neutrino **[1]**

(c) The above decay takes place within a nucleus of carbon-11. The half-life of this isotope of carbon is 1220 s.

A sample of carbon-11 has an activity of 800 Bq.

Calculate the activity, *A*, of this sample of carbon-11 after 5.0 minutes.

decay constant $\lambda = \ln 2 / t_{1/2} = 0.693 / 1220 = 5.68 \times 10^{-4}\ s^{-1}$

$t = 5.0 \times 60 = 300\ s$

$A = A_0 e^{-\lambda t} = 800 \times \exp(-5.68 \times 10^{-4} \times 300)$

$A = 800 \times 0.843 = 675\ Bq$

A = 675 Bq **[3]**

(d) The particle with symbol ${}^{0}_{+1}e$ can annihilate with its anti-particle.

Describe a practical use of this process in medical imaging.

Positron emission tomography (PET scan). A positron-emitting tracer (e.g. fluorine-18 in FDG) is injected. Each positron annihilates with an electron in the body, producing two gamma photons that travel in opposite directions (at 180°). A ring of detectors detects each pair, and the difference in their arrival times is used to locate the position of the annihilation, so a computer builds an image of where the tracer collects. **[4]**

© OCR 2025

stemup.co.uk

20 Superposition is a characteristic property of waves.

(a) Draw a diagram in the space below to show how superposition between two waves can cause destructive interference.

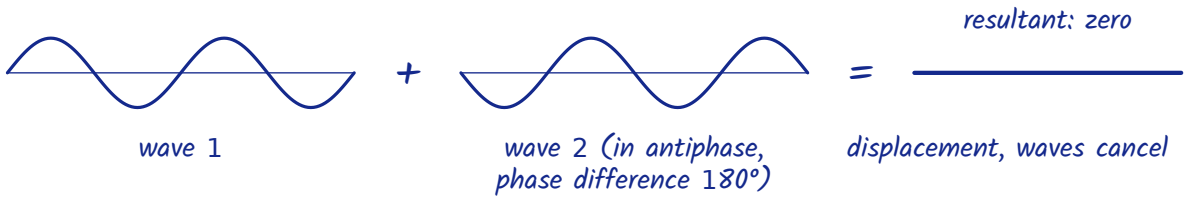

[2]

(b) In an experiment to determine the wavelength λ of red light, a laser is placed in front of a double slit. The red light from the laser is incident normally at the double slits. Equally spaced light and dark fringes are visible on a distant screen.

The distance between the double slits is d and the distance between the slits and the screen is D.

A diagram of the apparatus is shown below.

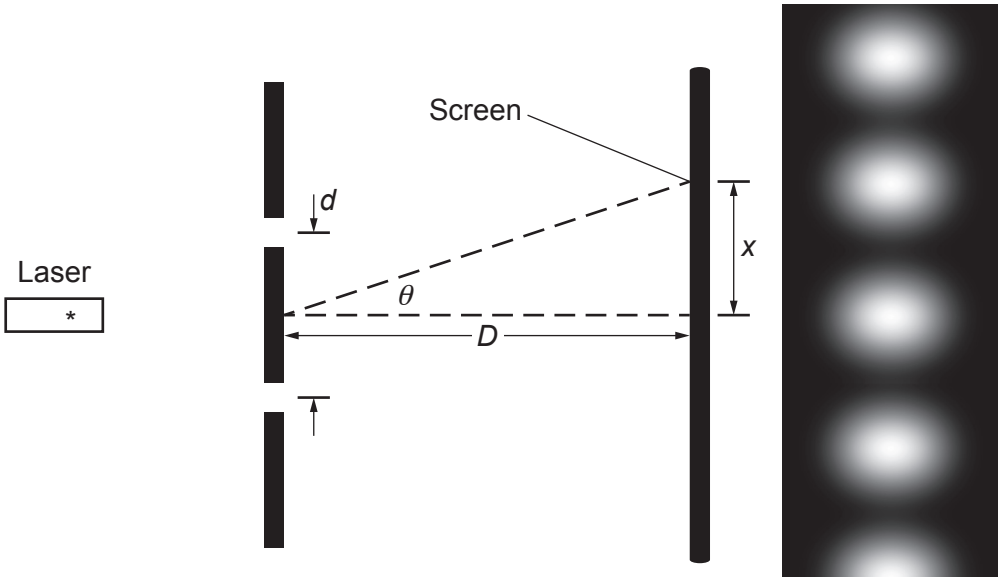

diagram not to scale

(i) Show that the fringe spacing, x, is approximately

$$x \approx \frac{D\lambda}{d}$$

State clearly any approximations you make.

First bright fringe: path difference = λ, so d sin θ = λ (n = 1)

From the diagram, tan θ = x / D

For small θ, sin θ ≈ tan θ, so x / D ≈ λ / d

giving x ≈ Dλ / d

Approximations *θ is small (D ≫ x), so sin θ ≈ tan θ ≈ θ* ..... **[3]**

© OCR 2025

(ii) Explain how the fringe pattern changes if

1 the laser emitting red light is replaced with a green laser

Green light has a shorter wavelength λ, so since $x = D\lambda/d$ the fringe spacing x decreases (fringes closer together).

..... **[2]**

2 the laser emitting red light is replaced with a white light **filament** lamp.

The fringes disappear (no interference pattern is seen), because the light from the filament lamp is not coherent; there is no constant phase difference.

..... **[2]**

(c) Visible light can be plane polarised.

Explain why sound waves cannot be plane polarised.

Plane polarised means the oscillations are in one direction only, in one plane perpendicular to the direction of propagation (energy transfer).
Sound waves are longitudinal; the oscillations are parallel to the direction of propagation, so they cannot be restricted to one plane. **[3]**

© OCR 2025

stemup.co.uk

21 The diagram shows a simple a.c. generator connected to an oscilloscope (CRO).

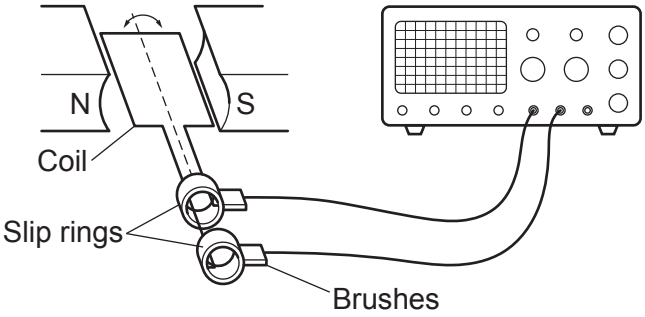

Students turn the coil at a steady rate and an a.c. signal is displayed on the oscilloscope screen, as shown in **Fig. 21.1**.

Fig. 21.1

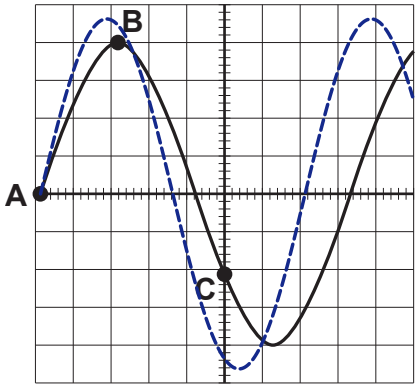

(a) Which position on the signal, **A**, **B** or **C**, corresponds to the generator position shown below?

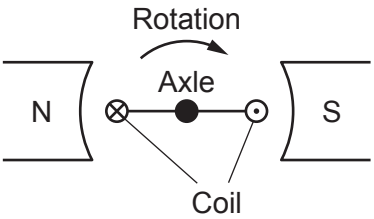

view from end of coil

Tick **one** box.

A	
B	✓
C	

[1]

(b) Draw on **Fig. 21.1** to show how the signal would change if the coil is rotated at a steady, faster rate. **[2]**

© OCR 2025

(c) The coil is rotated 45° clockwise from the position shown in **(a)** in a time of 0.13 s.
The magnetic field between the poles of the magnet is uniform and is 25 mT.
The coil has 120 turns.
The coil is 8.0×10^{-2} m long and 4.0×10^{-2} m wide.

(i) Calculate the change in flux linkage.

$\Phi = BA \cos\theta = 25 \times 10^{-3} \times (8.0 \times 10^{-2} \times 4.0 \times 10^{-2}) \times \cos 45°$

$= 5.66 \times 10^{-5}$ Wb; $N\Phi = 120 \times 5.66 \times 10^{-5} = 6.79 \times 10^{-3}$ Wb

Change in flux linkage = 6.8×10^{-3} Wb **[2]**

(ii) Calculate the average induced electromotive force (e.m.f.) ε across the contacts of the coil.

$\varepsilon = \Delta(N\Phi) / \Delta t = 6.79 \times 10^{-3} / 0.13$

$\varepsilon = 0.0522$ V

ε = 0.052 V **[2]**

(d) A larger generator is used in a wind turbine to supply electricity to a house. The house is also connected to the 230 V mains supply.

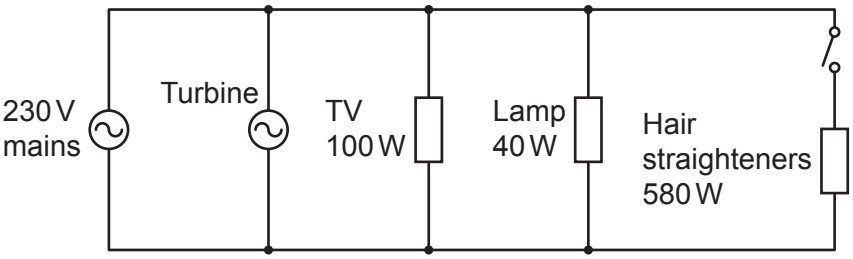

The TV and lamp are switched on.

When the turbine is providing a steady 400 W, the hair straighteners are switched on.

Calculate the current, I, drawn from the mains supply.

total power = 100 + 40 + 580 = 720 W

power from mains = 720 − 400 = 320 W

$I = P / V = 320 / 230 = 1.39$ A

I = 1.4 A **[2]**

(e) State the unit used to measure the electrical energy supplied to homes in the UK.

kilowatt-hour (kWh) **[1]**

© OCR 2025

stemup.co.uk

22

(a) Sketch a graph showing how the charge Q stored on a capacitor varies with the potential difference V across it.

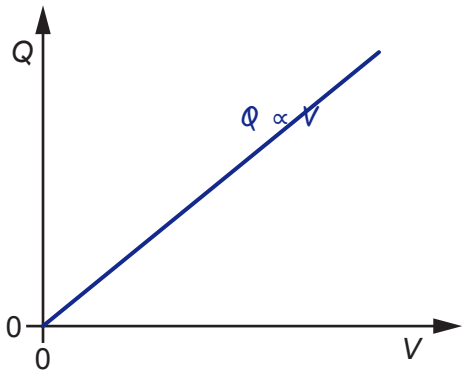

[1]

(b) Describe how to use your graph to calculate the energy stored by the capacitor.

Find the area under the line (the triangle) from the origin up to the charging p.d. V: energy stored W = ½QV.

..... **[2]**

© OCR 2025

(c) A teacher has built a model capacitor using sheets of aluminium and polythene. They use the model capacitor to measure the thickness of the polythene.

The foil sheets are rectangular, 30 cm wide and 50 cm long. The polythene sheet is larger to avoid the edges of the foil coming into contact with each other.

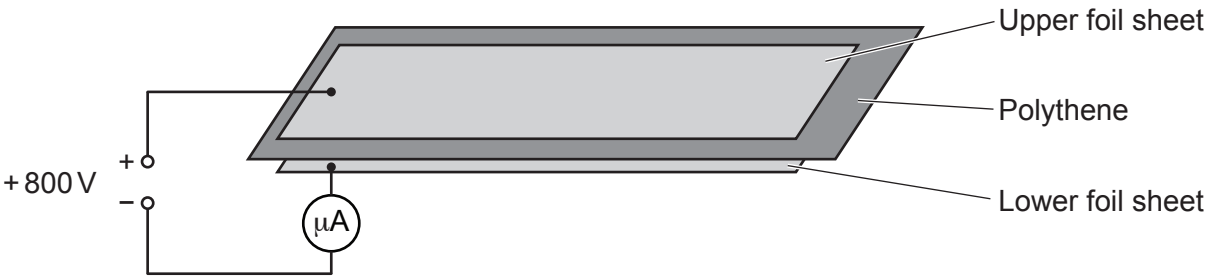

The power supply is switched on. The model capacitor is charged to 800 V in a time of 1.8 s.

The average current from the power supply during this time is 2.6 μA.

The polythene has relative permittivity 2.3.

(i) Calculate the thickness, *d*, of the polythene in mm.

$Q = It = 2.6 \times 10^{-6} \times 1.8 = 4.68 \times 10^{-6}$ C

$C = Q / V = 4.68 \times 10^{-6} / 800 = 5.85 \times 10^{-9}$ F

$C = \varepsilon_0 \varepsilon_r A / d$ so $d = \varepsilon_0 \varepsilon_r A / C$

$d = (8.85 \times 10^{-12} \times 2.3 \times 0.30 \times 0.50) / 5.85 \times 10^{-9} = 5.22 \times 10^{-4}$ m

d = 0.52 mm **[3]**

(ii) Suggest how the experiment should be carried out in order to get a set of accurate and precise results.

Measure the foil with a ruler of 1 mm resolution, use a digital microammeter and a data-logger to measure the current and time (or add a series resistor so charging is slower).

Repeat with different voltages (or foil areas) and plot Q against V, using the gradient for C; repeat and average to reduce random uncertainty. **[3]**

© OCR 2025

stemup.co.uk

(d)* A student creates a spreadsheet to model the discharge of a different capacitor through a resistor.

Fig. 22.1a shows part of the spreadsheet and some important values used in the modelling process.

Fig. 22.1a

	A	B	C
1	t / s	Q / μC	ΔQ / μC
2	0.0	200.00	−9.67
3	0.5	190.33	−9.20
4	1.0	128.03	−8.76
5	1.5	121.84	−8.33
6	2.0	115.94	−7.93
7	2.5	110.34	−7.55
8	3.0	148.55	−7.18
9	3.5	141.37	−6.84
10	4.0	134.53	−6.51
11	4.5	128.03	−6.19
12	5.0	121.84	−5.89
13	5.5	115.94	−5.61
14	6.0	110.34	−5.34
15			
16			
17			
18			
19			
20			
21			

time interval, Δt = 0.5 s

initial charge, Q_0 = 200 μC

capacitance of capacitor, C = 22 μF

resistance of resistor, R = 470 kΩ

© OCR 2025

Fig. 22.1b shows a plot of the values of *t* and *Q* from the spreadsheet.

Fig. 22.1b

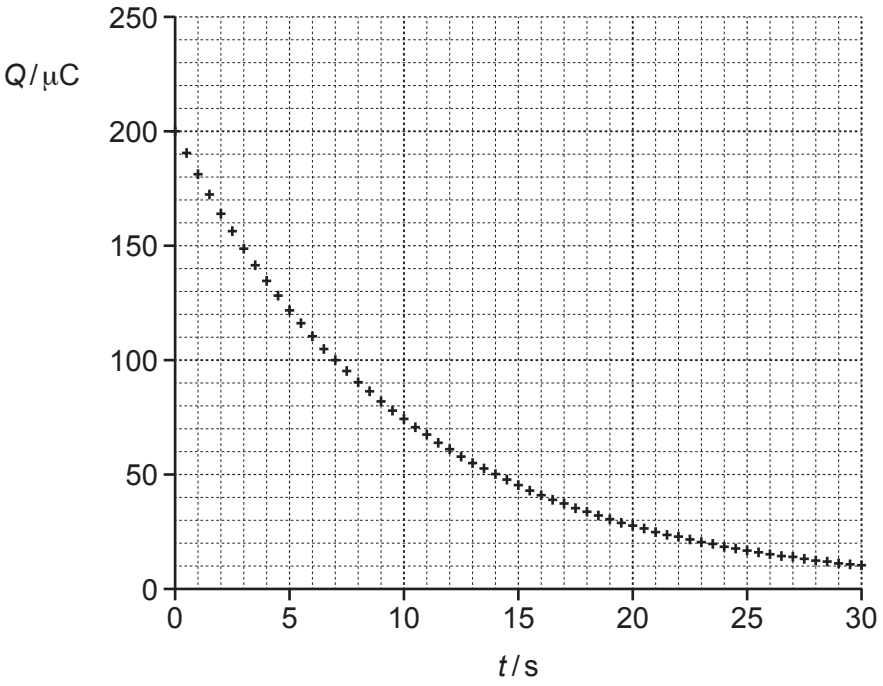

Use the data in **Fig. 22.1a** and **Fig. 22.1b** to describe how the student

- would calculate the values in columns **A**, **B** and **C** in the spreadsheet
- could confirm by calculation that the spreadsheet correctly models the discharge of the real capacitor. **[6]**

Column A: time starts at 0 and increases by Δt = 0.5 s each row, e.g. A3 = A2 + 0.5.

Column C: the change in charge in each interval is $\Delta Q = -(Q/CR)\Delta t$, since I = Q/CR. CR = 22 × 10^{-6} × 470 × 10^{3} = 10.34 s, so C2 = −B2 × 0.5 / 10.34 = −200 × 0.5 / 10.34 = −9.67 μC. ΔQ gets smaller as Q decreases.

Column B: B2 = Q_0 = 200 μC; each charge = previous charge + change, B3 = B2 + C2 = 200 − 9.67 = 190.33 μC. (B4 should be 190.33 − 9.20 = 181.13 μC, so cells B4 to B7 need correcting.)

Check: the real discharge is $Q = Q_0e^{-t/CR}$. At t = 4.0 s, $Q = 200e^{-4.0/10.34}$ = 136 μC, close to 134.53 μC in B10; the small difference is because Δt is not very small compared with CR.

From Fig. 22.1b, Q falls to $0.37Q_0$ = 74 μC at t ≈ 10 s, which agrees with

© OCR 2025

stemup.co.uk

the time constant CR = 10.34 s. Also Q halves to 100 μC at about 7 s, matching $t_{1/2}$ = 0.69CR = 7.2 s, so the spreadsheet correctly models the capacitor.

Additional space if required

© OCR 2025

BLANK PAGE

DO NOT WRITE ON THIS PAGE

© OCR 2025

stemup.co.uk

23 A student is investigating the resistance of a metal wire using the circuit shown below.

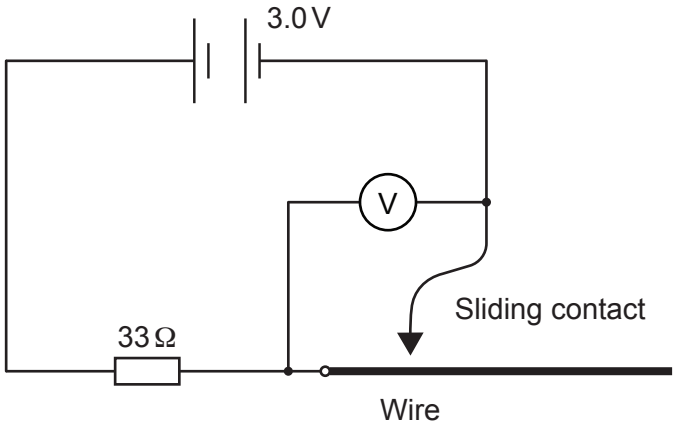

The battery has electromotive force (e.m.f.) 3.0 V and negligible internal resistance.

(a) Show that the resistance, R, of a length of this wire in terms of the p.d. across it, V, is given by the expression $R = \frac{33V}{3.0 - V}$.

$I = 3.0 / (33 + R)$ and $V = IR$, so $V(33 + R) = 3.0R$

$33V + VR = 3.0R$ so $33V = R(3.0 - V)$

$R = 33V / (3.0 - V)$

[2]

(b) The student records the voltmeter reading V for different lengths l of the wire. The resistance of the wire is R.

l / cm	V / mV	R / Ω
40	320	3.94
50	390	4.93
60	456	5.92
70	519	6.90
80	579	7.89

(i) Use the expression given in **(a)** to complete the two missing R values in the table. **[2]**

© OCR 2025

(ii) The axes below show a plot of R against l.
Three points from the table have already been plotted.

Plot the remaining points. **[1]**

(iii) Draw on your plot a line of best fit. **[1]**

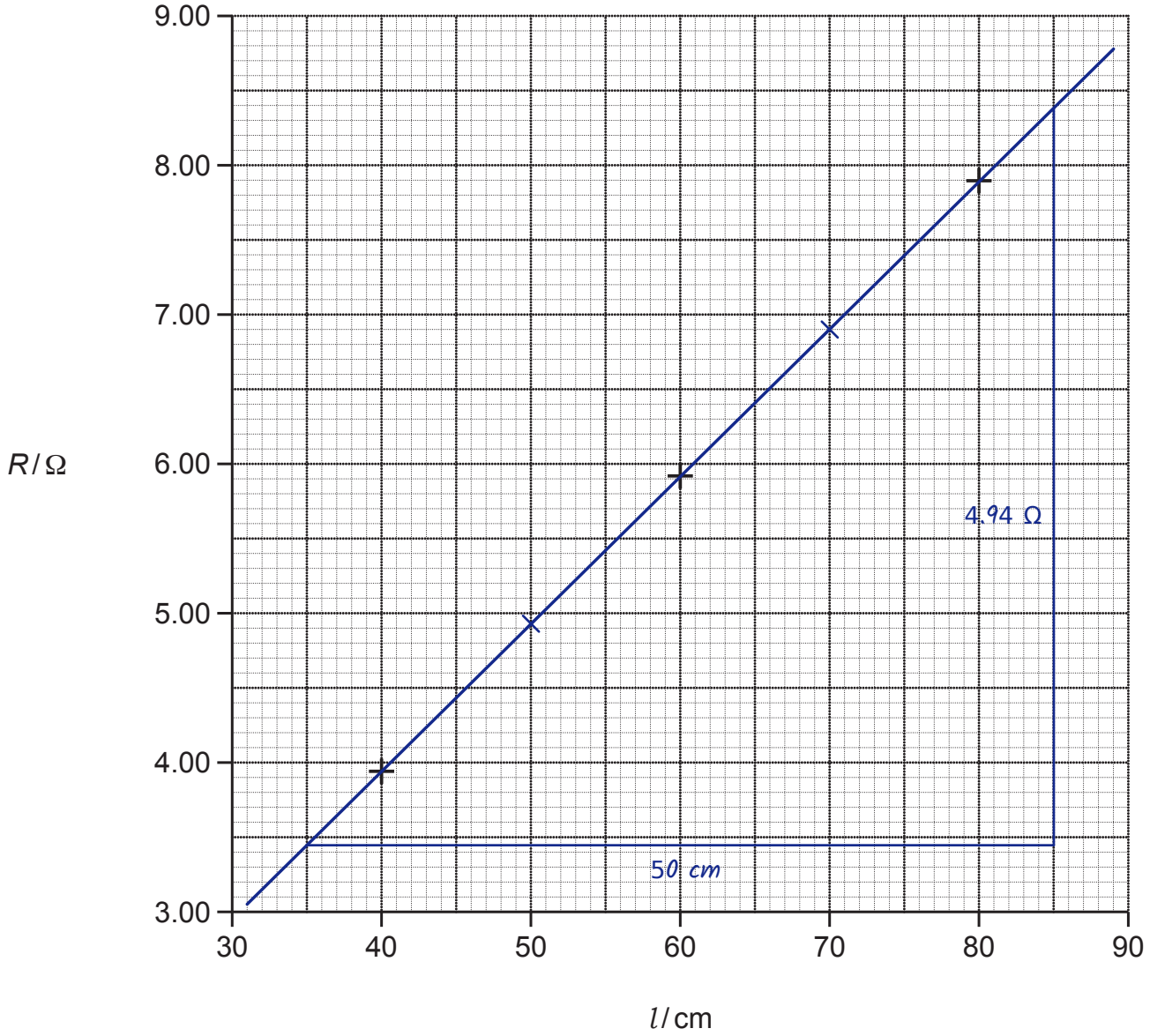

© OCR 2025

stemup.co.uk

(c) The wire is made of constantan which has a resistivity of $5.00 \times 10^{-7}\,\Omega\,\text{m}$.

Use the gradient of the line of best fit to determine the diameter, *d*, of the wire.

From the triangle, (35 cm, 3.45 Ω) to (85 cm, 8.39 Ω):

gradient = (8.39 − 3.45) / (85 − 35) = 4.94 / 50 = 0.0988 Ω cm^{-1} = 9.88 Ω m^{-1}

$R = \rho l / A$, so gradient = ρ / A

$A = \rho$ / gradient = $5.00 \times 10^{-7} / 9.88 = 5.06 \times 10^{-8}\ m^2$

$A = \pi d^2/4$, so $d = \sqrt{(4A/\pi)} = \sqrt{(4 \times 5.06 \times 10^{-8} / \pi)}$

$d = 2.54 \times 10^{-4}$ m

d = 2.5×10^{-4} m **[4]**

(d) The diagram below shows how the student uses the sliding contact to complete the circuit for a known length of wire.

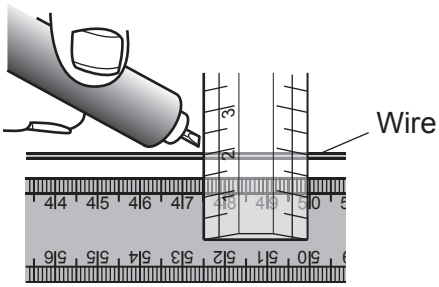

Explain how this arrangement helps the student to make high-quality measurements.

The sharp point of the contact reduces the uncertainty in its position. The clear ruler is right next to the wire, reducing parallax error, and it reads to 1 mm (high resolution). So an accurate reading of the length of wire is obtained.

[3]

END OF QUESTION PAPER

© OCR 2025

EXTRA ANSWER SPACE

If you need extra space use these lined pages. You must write the question numbers clearly in the margin.

© OCR 2025

© OCR 2025

© OCR 2025

OCR
Oxford Cambridge and RSA

Copyright Information

OCR is committed to seeking permission to reproduce all third-party content that it uses in its assessment materials. OCR has attempted to identify and contact all copyright holders whose work is used in this paper. To avoid the issue of disclosure of answer-related information to candidates, all copyright acknowledgements are reproduced in the OCR Copyright Acknowledgements Booklet. This is produced for each series of examinations and is freely available to download from our public website (www.ocr.org.uk) after the live examination series.

If OCR has unwittingly failed to correctly acknowledge or clear any third-party content in this assessment material, OCR will be happy to correct its mistake at the earliest possible opportunity.

For queries or further information please contact The OCR Copyright Team, The Triangle Building, Shaftesbury Road, Cambridge CB2 8EA.

OCR is part of Cambridge University Press & Assessment, which is itself a department of the University of Cambridge.

© OCR 2025