Oxford Cambridge and RSA

Monday 17 June 2024 – Morning

A Level Physics A

H556/03 Unified physics

Time allowed: 1 hour 30 minutes

You must have:
- the Data, Formulae and Relationships Booklet

You can use:
- a scientific or graphical calculator
- a ruler (cm/mm)

Please write clearly in black ink. **Do not write in the barcodes.**

Centre number | | | | | | Candidate number | | | | |

First name(s) _____

Last name _____

INSTRUCTIONS
- Use black ink. You can use an HB pencil, but only for graphs and diagrams.
- Write your answer to each question in the space provided. If you need extra space use the lined page at the end of this booklet. The question numbers must be clearly shown.
- Answer **all** the questions.
- Where appropriate, your answers should be supported with working. Marks might be given for using a correct method, even if your answer is wrong.

INFORMATION
- The total mark for this paper is **70**.
- The marks for each question are shown in brackets **[ ]**.
- Quality of extended response will be assessed in questions marked with an asterisk (*).
- This document has **20** pages.

ADVICE
- Read each question carefully before you start your answer.

© OCR 2024 [601/4743/X]
DC (CJ/SG) 340059/5
OCR is an exempt Charity

Answer **all** the questions.

1 A flute is a musical instrument made from a long tube that is open at both ends.

A stationary sound wave in the tube produces a musical note.

The lowest frequency note that a standard flute produces in air is 262 Hz.

The speed of sound in air at a temperature of 20 °C is 340 m s^{-1}.

(a) Show that a standard flute has an approximate length of 0.65 m.

[3]

(b) In an ideal gas, the speed v of sound is given by

$$v = \left(\frac{\gamma RT}{M}\right)^{1/2}$$

where

γ is a dimensionless constant that depends on the gas

R is the molar gas constant

T is the absolute temperature

M is the molar mass of the gas.

The table below shows values of γ and M for both air and helium.

Gas	**γ**	**M / g mol^{-1}**
Air	1.40	29.0
Helium	1.67	4.00

© OCR 2024

(i) The kinetic model of an ideal gas assumes that there are a large number of particles in rapid, random motion.

State **two** further assumptions for the kinetic model of an ideal gas.

1 .....

.....

2 .....

..... **[2]**

(ii) A standard flute is placed inside a sealed chamber.

The chamber is filled with helium at a temperature of –10 °C.

Calculate the lowest frequency that the flute could produce inside the chamber.

frequency = ... Hz **[4]**

© OCR 2024

2 A group of students investigate the circuit shown in the figure below.

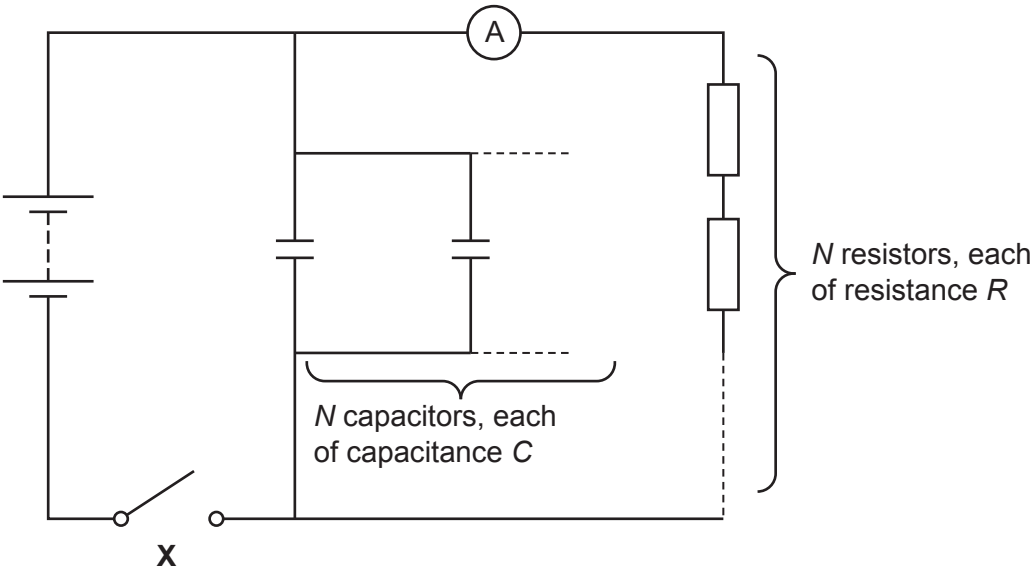

There are *N* capacitors, each of capacitance *C*, connected in parallel.

There are *N* resistors, each of resistance *R*, connected in series.

Initially, the students close the switch **X**. They then note the reading on the ammeter.

The students then open the switch. They record the time *T* for the reading on the ammeter to fall to half of its initial value.

The table below shows the students' results.

N	***T* / s**			
	1	**2**	**3**	**Mean**
1	14.7	14.1	14.3	.....
2	50.3	49.6	50.1	.....
3	126.6	126.3	125.2	126.0
4	224.4	224.3	225.9	224.9
5	356.1	354.3	345.6	352.0
6	500.4	512.7	499.5	504.2

© OCR 2024

(a) Show that $T = (\ln 2)N^2RC$.

[2]

(b) The students write in their lab books, "Our data is precise".

Evaluate this statement.

.....

.....

.....

.....

.....

..... **[2]**

Question 2 continues on page 6

© OCR 2024

(c) The results table is repeated below.

Complete the last column for N = 1 and N = 2 in the table below.

N	***T*** **/ s**			
	1	**2**	**3**	**Mean**
1	14.7	14.1	14.3	.....
2	50.3	49.6	50.1	.....
3	126.6	126.3	125.2	126.0
4	224.4	224.3	225.9	224.9
5	356.1	354.3	345.6	352.0
6	500.4	512.7	499.5	504.2

[1]

(d) The students begin to plot a graph of T (y-axis) against N^2 (x-axis).

(i) Complete the graph below and plot the 6 results from the table. You are **not** expected to include error bars. **[4]**

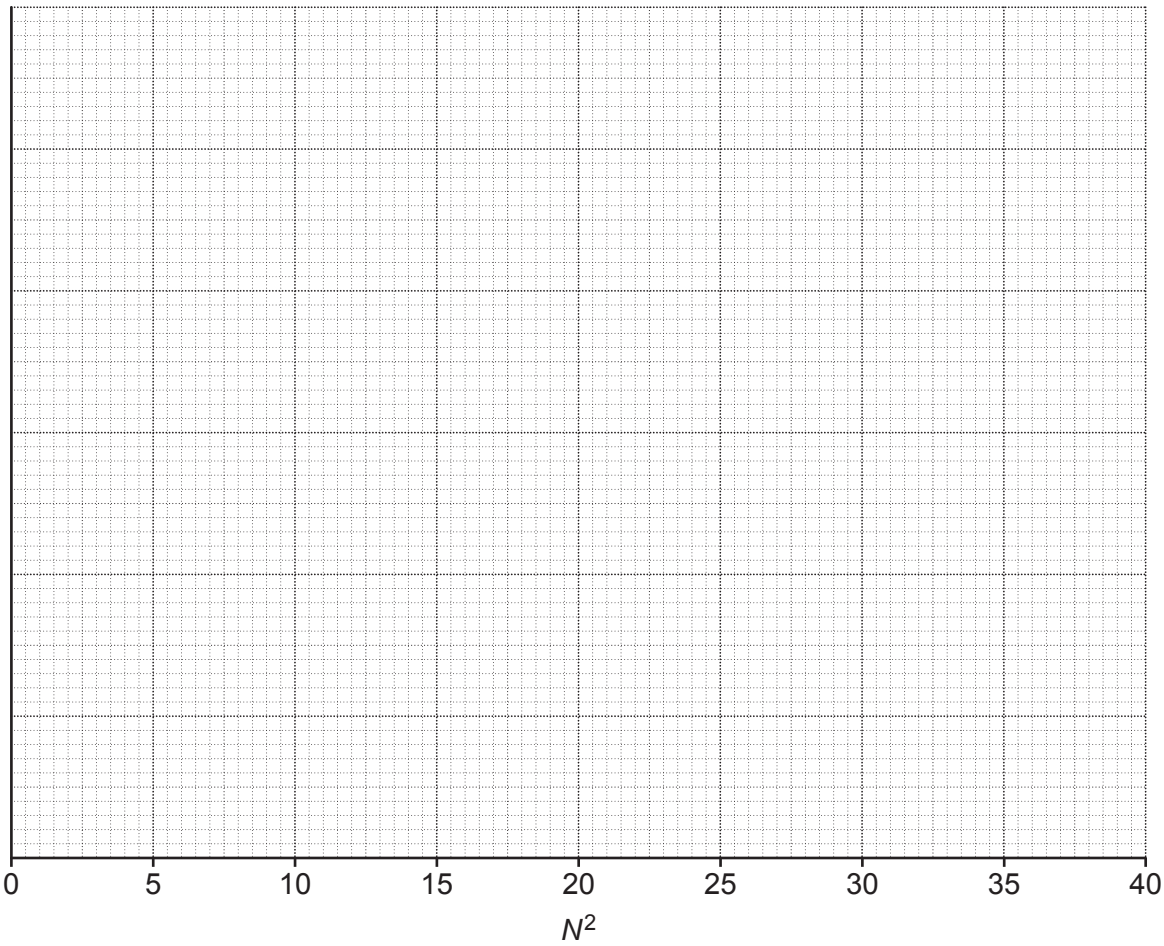

© OCR 2024

(ii) Draw a straight line of best fit on the graph. **[1]**

(iii) Calculate the gradient of the straight line of best fit.

gradient = ... s **[2]**

(iv) The value of *C* is known to be 1000 μF ± 5%.

Use your gradient value from **(iii)** to find a value for *R*, in units of kΩ, including an **absolute** uncertainty.

R = ... ± ..... kΩ **[2]**

(e) Following the investigation, the students discovered that the sixth 1000 μF capacitor connected to the circuit was actually two 470 μF capacitors connected in parallel.

(i) State the type of error caused by this mistake.

..... **[1]**

(ii) Explain the effect that this error would have had on the calculated value of *R*.

.....

.....

.....

..... **[1]**

© OCR 2024

3 A scientist uses a rocket to study the Earth's atmosphere.

The scientist launches the rocket from rest at the point **A** at t = 0 seconds. The force produced by the rocket's engine causes it to accelerate.

At t = 50 seconds, the rocket's engine no longer produce an accelerating force as all of the fuel has been used. The rocket has reached point **B**. Its velocity is now 3.1 km s^{-1} at an angle of 75° to the horizontal.

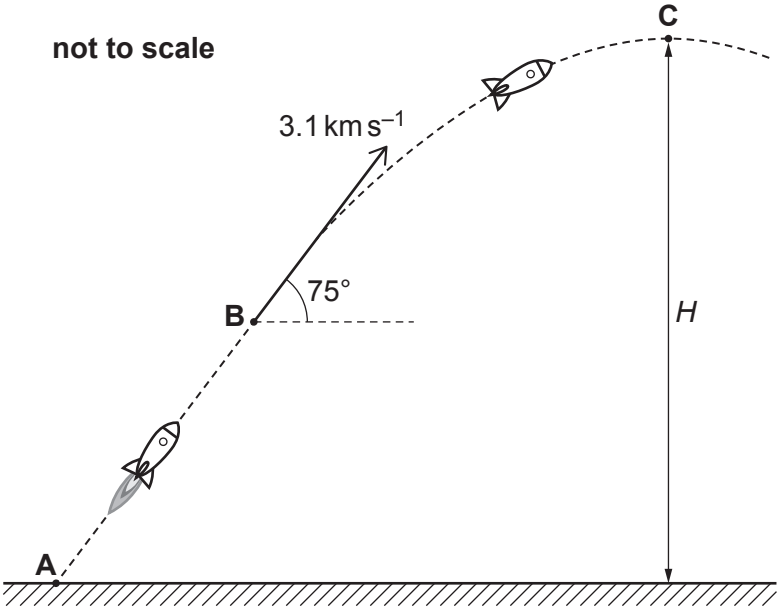

(a) The rocket engine works by expelling hot gas backwards.

Explain, using Newton's laws of motion, how the engine causes the rocket to accelerate between t = 0 and t = 50 s.

.....

.....

.....

.....

.....

..... **[3]**

© OCR 2024

***(b)** The rocket reaches its maximum height at point **C**.

- Estimate the vertical displacement H between **A** and **C**. Assume that $g = 9.81\,\mathrm{m\,s^{-2}}$ throughout.
- Clearly state any other assumptions required at each stage in your calculations.
- Evaluate the assumption that $g = 9.81\,\mathrm{m\,s^{-2}}$ between **A** and **C**, supporting your discussion with a calculation. Assume that the radius of the Earth ≈ 6400 km.

.....

.....

.....

.....

.....

.....

.....

.....

.....

.....

.....

.....

.....

.....

Additional answer space if required

.....

.....

.....

.....

.....

.....

.....

.....

..... **[6]**

© OCR 2024

4 The length of an unloaded spring is approximately 4 cm.

The force constant k of the spring is $0.62\,\text{N}\,\text{cm}^{-1}$.

(a) Describe how you could determine k using an appropriate experiment.

.....

.....

.....

.....

.....

..... **[3]**

(b) The figure below shows a block of mass 0.20 kg attached to one end of the spring. The other end of the spring is attached to a fixed support vertically above the block.

In position **P** the block rests in equilibrium. The extension of the spring is 3.2 cm.

In position **Q** a downwards force F has been applied to the block, so that it now rests a distance d below its position at **P**. The extension of the spring is now 8.5 cm.

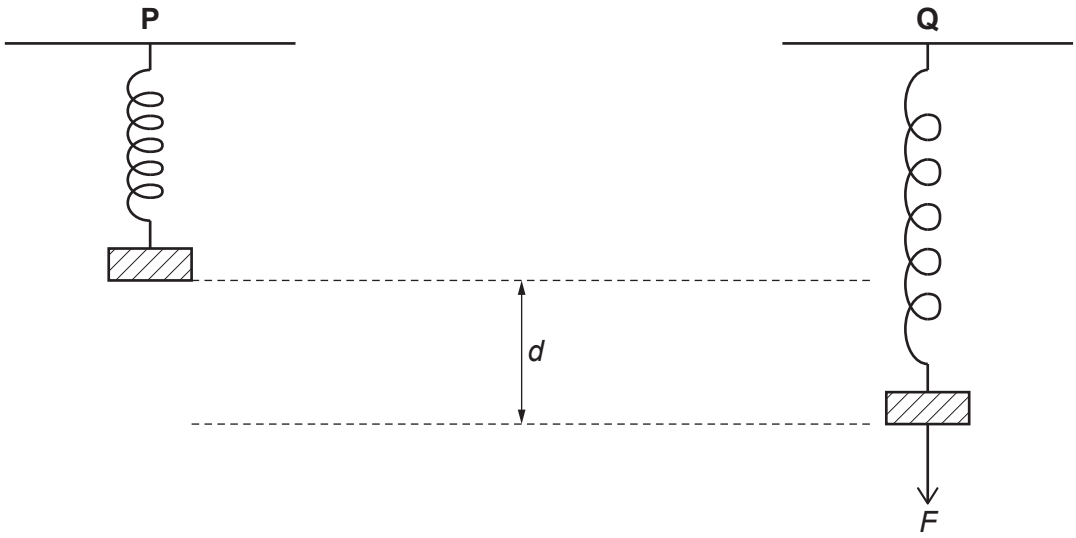

© OCR 2024

The force *F* is removed.

(i) Calculate the magnitude of the block's initial acceleration at the instant that the force *F* is removed.

Assume that the spring is not extended beyond its limit of proportionality.

acceleration = ... $m\,s^{-2}$ **[3]**

(ii) The block now moves with simple harmonic motion.

Calculate the frequency of this motion.

frequency = ... Hz **[3]**

© OCR 2024

(c) The block is replaced by a strong magnet **L** of slightly greater mass.

The oscillation frequency of this new arrangement is 2.5 Hz.

The magnet **L** is placed inside a coil **X** of insulated copper wire.

The coil **X** is connected with long wires to a second, identical coil **Y**.

A second strong magnet **M** is placed inside **Y** and attached to a vibration generator.

The vibration generator is then forced to oscillate with a frequency of approximately 2.5 Hz by adjusting the signal generator.

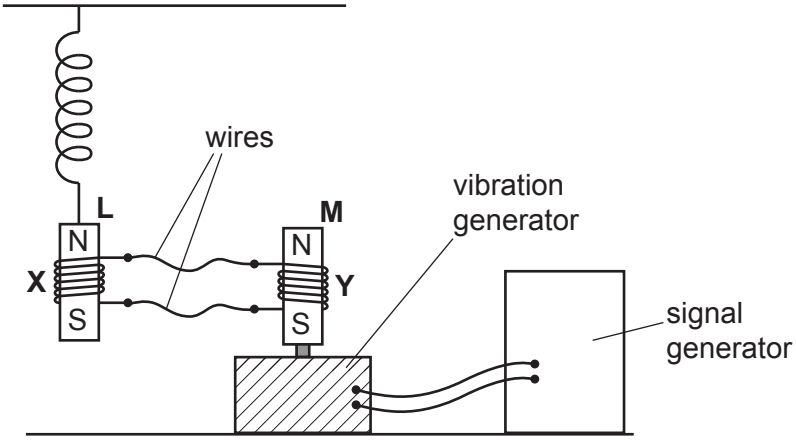

(i) As magnet **M** oscillates, it moves in and out of coil **Y**.

The magnet **L** also begins to oscillate.

Explain why **L** oscillates.

.....

.....

.....

.....

.....

..... **[3]**

© OCR 2024

(ii) The frequency of the vibration generator is now varied between 0.5 Hz and 5.0 Hz.

Suggest how the amplitude and frequency of the oscillations of **L** will change as the frequency of the generator is varied.

You may draw a diagram to support your answer.

.....

.....

.....

.....

.....

..... **[3]**

© OCR 2024

5

(a) Explain what is meant by

(i) internal resistance of a cell

.....

..... **[1]**

(ii) e.m.f. of a cell.

.....

..... **[1]**

(b) A cell has internal resistance $r = 1.2\,\Omega$ and e.m.f. $\varepsilon = 5.6\,\text{V}$.

When the cell is connected to a filament lamp **B**, as shown in the circuit diagram below, the current in the circuit is I.

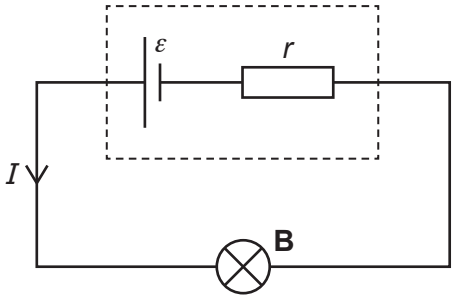

The I-V characteristic for **B** is shown in the figure below.

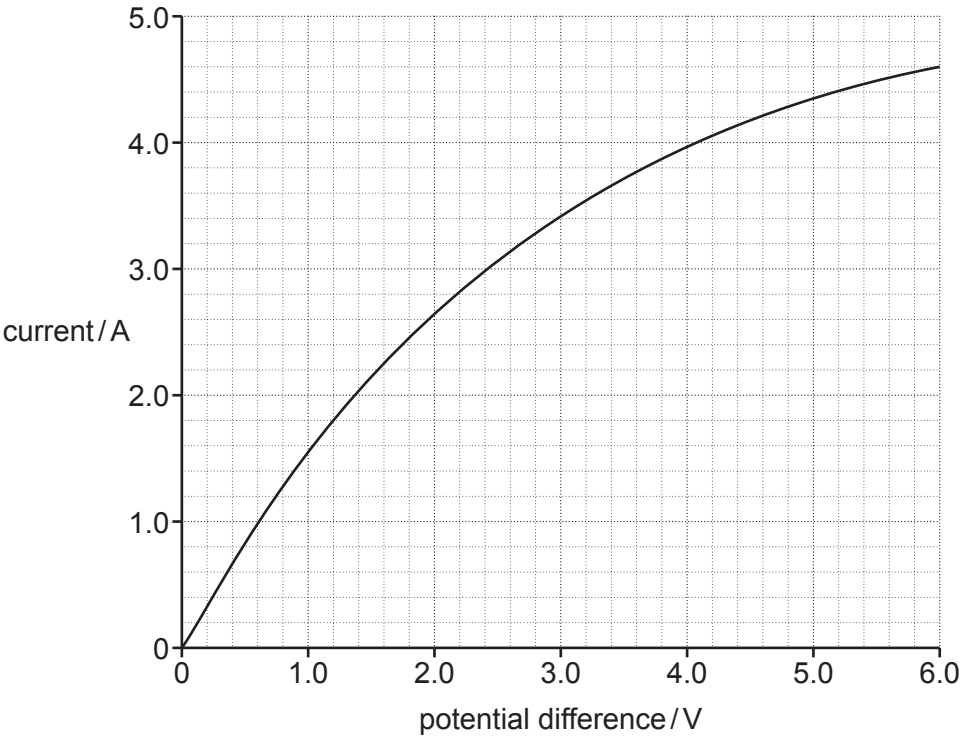

© OCR 2024

Determine the current I in the circuit.

current = ... A **[3]**

Question 5 continues on page 16

© OCR 2024

***(c)** A student wants to determine the internal resistance r and the e.m.f. ε of a different cell.

The student knows that the internal resistance is approximately 0.1 Ω.

The only other **electrical** equipment available is as follows:

- one voltmeter
- one ammeter
- one sensitive thermistor, known to have resistance of approximately 0.1 Ω at 20 °C
- several connecting wires and crocodile clips.

Describe how the student can determine r and ε for the cell.

Include how the student should:

- collect and analyse the data
- determine the uncertainties in the values of r and ε.

.....

.....

.....

.....

.....

.....

.....

.....

.....

.....

.....

© OCR 2024

.....

.....

.....

Additional answer space if required

.....

.....

.....

.....

.....

.....

.....

.....

.....

..... **[6]**

© OCR 2024

6 The figure below shows the path of a proton moving in a region occupied by both an electric field and a magnetic field.

The direction of the electric field lines is perpendicular to the direction of the magnetic field lines.

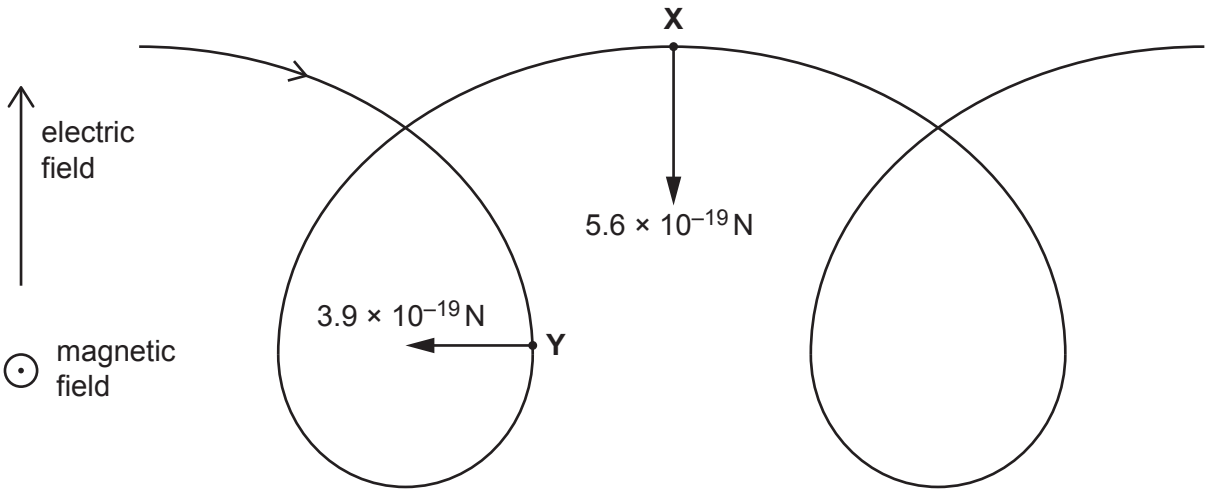

The uniform electric field is directed upwards, with electric field strength $E = 0.90\,\text{N}\,\text{C}^{-1}$.

The uniform magnetic field is directed out of the plane of the paper, with magnetic flux density $B = 5.0 \times 10^{-5}\,\text{T}$.

At point **X** the proton is moving horizontally to the right. The magnitude of the **magnetic** force at **X** is $5.6 \times 10^{-19}\,\text{N}$.

At point **Y** the proton is moving vertically downwards. The magnitude of the **magnetic** force at **Y** is $3.9 \times 10^{-19}\,\text{N}$.

The **electric** forces acting on the proton at **X** and **Y** are **not** shown in the figure.

(a) Show that the magnitude of the constant **electric** force acting on the proton is about $10^{-19}\,\text{N}$.

[1]

(b)
(i) Suggest why the **magnetic** force acting on the proton has a different magnitude at **X** than at **Y**.

.....

.....

..... **[1]**

© OCR 2024

(ii) At **X**, the motion of the proton is instantaneously equivalent to motion in a circle at a constant speed.

Calculate the radius of this circular motion.

radius = ... m **[4]**

(iii) **1** Calculate the magnitude of the resultant force on the proton at **Y**.

resultant force = ... N **[2]**

2 Explain why the motion of the proton at **Y** is **not** instantaneously equivalent to motion in a circle at a constant speed.

.....

.....

.....

..... **[2]**

END OF QUESTION PAPER

© OCR 2024

EXTRA ANSWER SPACE

If you need extra space use this lined page. You must write the question numbers clearly in the margin.

OCR
Oxford Cambridge and RSA

Copyright Information

OCR is committed to seeking permission to reproduce all third-party content that it uses in its assessment materials. OCR has attempted to identify and contact all copyright holders whose work is used in this paper. To avoid the issue of disclosure of answer-related information to candidates, all copyright acknowledgements are reproduced in the OCR Copyright Acknowledgements Booklet. This is produced for each series of examinations and is freely available to download from our public website (www.ocr.org.uk) after the live examination series.

If OCR has unwittingly failed to correctly acknowledge or clear any third-party content in this assessment material, OCR will be happy to correct its mistake at the earliest possible opportunity.

For queries or further information please contact The OCR Copyright Team, The Triangle Building, Shaftesbury Road, Cambridge CB2 8EA.

OCR is part of Cambridge University Press & Assessment, which is itself a department of the University of Cambridge.

© OCR 2024