Oxford Cambridge and RSA

Monday 20 May 2019 – Afternoon

A Level Physics A

H556/01 Modelling physics

Time allowed: 2 hours 15 minutes

You must have:
- the Data, Formula and Relationships Booklet (sent with general stationery)

You may use:
- a scientific or graphical calculator
- a ruler (cm/mm)

Please write clearly in black ink. **Do not write in the barcodes.**

Centre number | | | | | | Candidate number | | | | |

First name(s) _____

Last name StemUp Model Solution

INSTRUCTIONS
- Use black ink. You may use an HB pencil for graphs and diagrams.
- Answer **all** the questions.
- Where appropriate, your answers should be supported with working. Marks may be given for a correct method even if the answer is incorrect.
- Write your answer to each question in the space provided. If additional space is required, use the lined page(s) at the end of this booklet. The question number(s) must be clearly shown.

INFORMATION
- The total mark for this paper is **100**.
- The marks for each question are shown in brackets **[ ]**.
- Quality of extended responses will be assessed in questions marked with an asterisk (*).
- This document consists of **32** pages.

© OCR 2019 [601/4743/X]
DC (CE/SG) 173647/5
OCR is an exempt Charity

stemup.co.uk

SECTION A

You should spend a maximum of 30 minutes on this section.

Write your answer to each question in the box provided.

Answer **all** the questions.

1 Which set of prefixes **A**, **B**, **C** or **D** are in order of **increasing** magnitude?

A micro, milli, centi, kilo

B milli, centi, micro, kilo

C kilo, centi, milli, micro

D centi, micro, milli, kilo

Your answer A **[1]**

2 A paper cone is held above the ground and dropped. It falls vertically and reaches terminal velocity before it hits the ground.

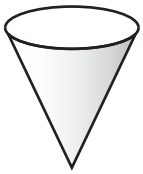

Which statement correctly describes the **resultant** force on the falling cone before it reaches terminal velocity?

A decreasing and upwards

B decreasing and downwards

C increasing and downwards

D increasing and upwards

Your answer B **[1]**

© OCR 2019

3 A solid cylindrical glass rod has length 20.0 ± 0.1 cm and diameter 5.00 ± 0.01 mm.

What is the percentage uncertainty in the calculated volume of this rod?

A 0.1%

B 0.2%

C 0.7%

D 0.9%

Your answer D **[1]**

4 A simple harmonic oscillator has maximum speed 24 m s^{-1} and amplitude 5.6 cm.

What is its angular frequency?

A 0.23 rad s^{-1}

B 21 rad s^{-1}

C 68 rad s^{-1}

D 430 rad s^{-1}

Your answer D **[1]**

5 A car is dripping oil at a steady rate on a straight road.
The road is divided into four sections **A**, **B**, **C**, and **D**.

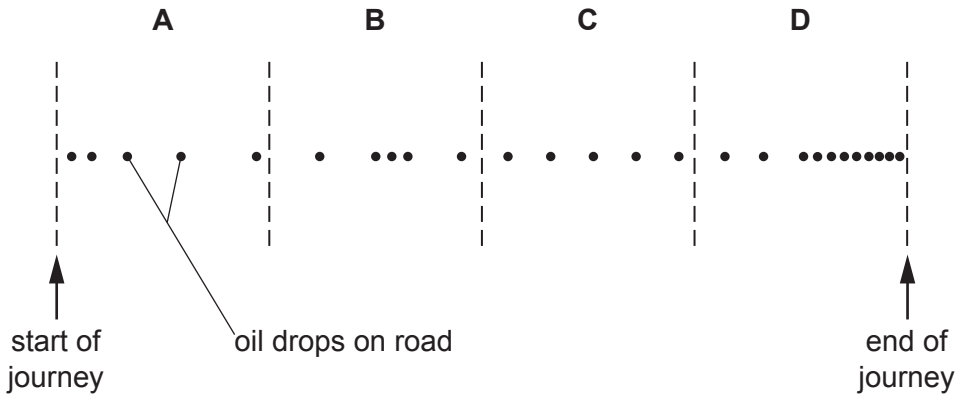

Which section of the road shows the car travelling at a constant speed?

Your answer C **[1]**

© OCR 2019

stemup.co.uk

6 The Earth is surrounded by a gravitational field.

Which of the following statements is/are correct about the gravitational field lines near the **surface** of the Earth.

1 They are parallel.
2 They show the direction of the force on a small mass.
3 They are equally spaced.

A Only 1

B Only 1 and 2

C Only 2 and 3

D 1, 2 and 3

Your answer D **[1]**

7 A pendulum bob is oscillating in a vacuum.
The maximum height of the bob from the ground is 1.3 m and its minimum height is 1.1 m.

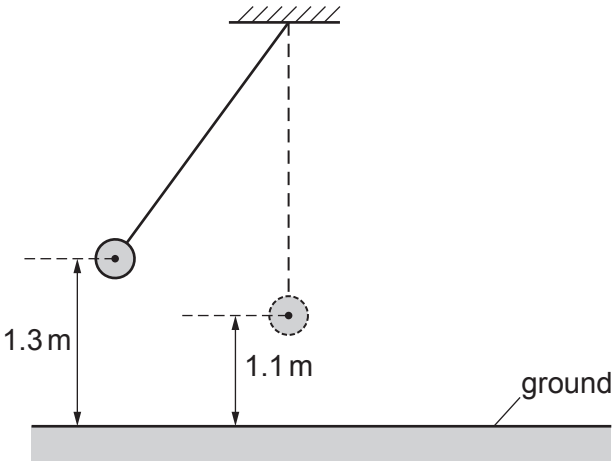

What is the maximum speed of the pendulum bob?

A $2.0\,m\,s^{-1}$

B $3.9\,m\,s^{-1}$

C $5.1\,m\,s^{-1}$

D $26\,m\,s^{-1}$

Your answer A **[1]**

© OCR 2019

8 An object is falling.
The weight of the object is 4.5 N.
The wind provides a horizontal force of magnitude *F* on the object.
The **resultant** force on the object is 5.8 N.
Air resistance and upthrust on the object are negligible.

What is the value of *F*?

A 1.3 N

B 3.7 N

C 7.3 N

D 13 N

Your answer B **[1]**

9 A solid molecular substance is supplied with energy and it starts to melt.

Which of the following pairs of quantities remains the same as the substance melts?

A Kinetic energy of molecules and internal energy of molecules.

B Potential energy of molecules and internal energy of molecules.

C Kinetic energy of molecules and temperature of substance.

D Potential energy of molecules and temperature of substance.

Your answer C **[1]**

10 Which of the following shows the correct base units for pressure?

A $kg\,m^{-2}$

B $kg\,m^{-2}\,s^{-2}$

C $kg\,m^{-1}\,s^{-2}$

D $kg\,m^{2}\,s^{-3}$

Your answer C **[1]**

© OCR 2019

stemup.co.uk

11 A student has collected some data on the Solar System.
The student plots a graph, but only two data points are shown below.

The distance from the centre of the Sun is *r*.

Which quantity *y* is represented on the vertical axis?

A Speed of a planet.

B Period of a planet.

C Gravitational potential of the Sun.

D Gravitational field strength of the Sun.

Your answer B **[1]**

© OCR 2019

12 A graph showing the variation of the stress σ with strain ε for a material is shown below.

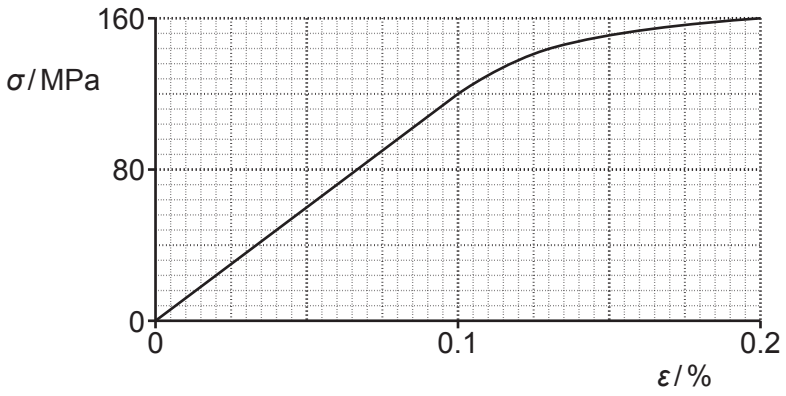

What is the Young modulus of the material?

A 6.0×10^4 Pa

B 1.2×10^9 Pa

C 8.0×10^{10} Pa

D 1.2×10^{11} Pa

Your answer D **[1]**

13 Which column **A**, **B**, **C** or **D**, shows the correct sequence for the evolution of the Universe between the Big Bang and the formation of stars?

A	B	C	D
Universe starts to expand ↓ quarks and leptons form ↓ hadrons form ↓ nuclei form ↓ atoms form	Universe starts to expand ↓ hadrons form ↓ quarks and leptons form ↓ nuclei form ↓ atoms form	quarks and leptons form ↓ nuclei form ↓ Universe starts to expand ↓ atoms form ↓ hadrons form	quarks and leptons form ↓ hadrons form ↓ Universe starts to expand ↓ nuclei form ↓ atoms form

Your answer A **[1]**

© OCR 2019

stemup.co.uk

14 Some stars will evolve into white dwarfs.
The mass of the Sun is 2.0×10^{30} kg.

Which of the following **cannot** be the mass of a white dwarf?

A 1.2×10^{30} kg

B 2.0×10^{30} kg

C 2.7×10^{30} kg

D 3.2×10^{30} kg

Your answer D **[1]**

15 An astronomer analyses the light from a distant galaxy.
One of the spectral lines in the spectrum observed from the galaxy has wavelength 610 nm.
The same spectral line has a wavelength of 590 nm when measured in the laboratory.

What is the speed of this galaxy?

A $9.8 \times 10^{6}\,\mathrm{m\,s^{-1}}$

B $1.0 \times 10^{7}\,\mathrm{m\,s^{-1}}$

C $2.9 \times 10^{8}\,\mathrm{m\,s^{-1}}$

D $3.0 \times 10^{8}\,\mathrm{m\,s^{-1}}$

Your answer B **[1]**

© OCR 2019

BLANK PAGE

PLEASE DO NOT WRITE ON THIS PAGE

Question 16 begins on page 10

© OCR 2019

stemup.co.uk

SECTION B

Answer **all** the questions.

16 **(a)** Explain what is meant by the **ultimate tensile strength** of a material.

The maximum tensile stress that a material can withstand before it breaks.

..... **[1]**

(b) A footbridge is supported by a number of metal cables of the same length.
Each cable has uniform cross-section and diameter 4.20 mm as shown in Fig. 16.1.

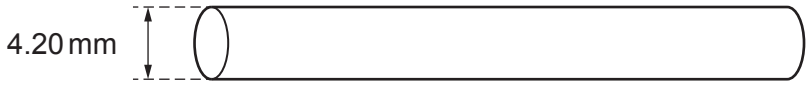

Fig. 16.1 (not to scale)

A group of engineers investigate how the extension x varies with applied force F for one of the cables.

The results of the investigation are shown in Fig. 16.2.

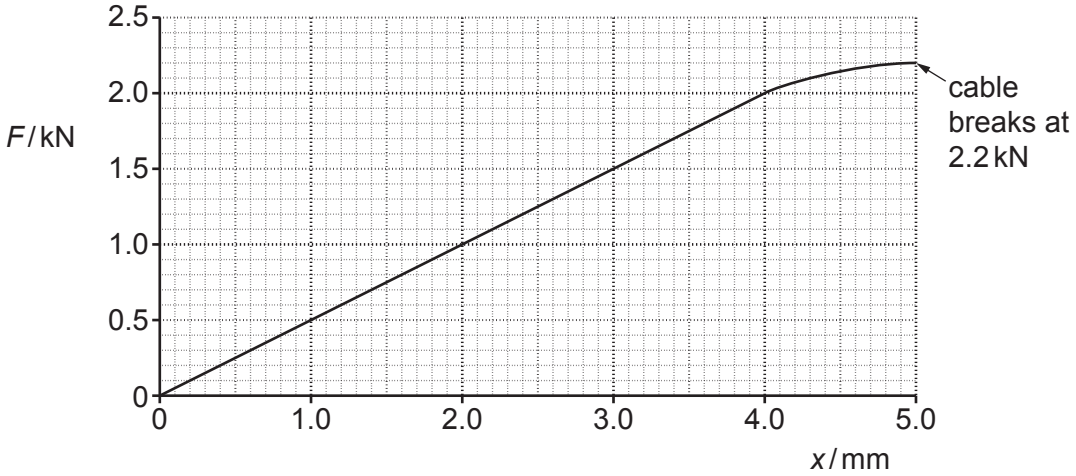

Fig. 16.2

The cable breaks when the force is 2.2 kN.

(i) Describe how a suitable measuring device may have been used by the engineers to demonstrate that the cable had uniform cross-section.

Use a micrometer to measure the diameter at several points along the cable's length and in different directions at each point; readings all the same (4.20 mm) means a uniform cross-section. ..... **[2]**

© OCR 2019

(ii) State any value of F when the cable behaves

1. elastically

F = 1.0 kN

2. plastically.

F = 2.1 kN
[2]

(iii) Use Fig. 16.2 to determine the force constant k in $N\,m^{-1}$ of the cable.

k = gradient of the straight (linear) section

$k = F / x = 2.0 \times 10^3 / 4.0 \times 10^{-3}$

$k = 5.0 \times 10^5\ N\ m^{-1}$

k = 5.0×10^5 $N\,m^{-1}$ **[2]**

(c) Determine the breaking stress σ of the cable.
Assume that the cross-sectional area of the cable remains constant during the test.

$A = \pi r^2 = \pi \times (2.10 \times 10^{-3})^2 = 1.39 \times 10^{-5}\ m^2$

$\sigma = F / A = 2200 / 1.39 \times 10^{-5}$

$\sigma = 1.59 \times 10^8\ Pa$

σ = 1.6×10^8 Pa **[2]**

(d) Explain why the work done on the cable when its extension changes from 3.0 mm to 4.0 mm is greater than when its extension changes from 1.0 mm to 2.0 mm.

Work done = area under the F against x graph = average force x extension.

The average force from 3.0 to 4.0 mm (1.75 kN) is greater than from 1.0 to 2.0 mm (0.75 kN), so the area is greater. **[2]**

© OCR 2019

stemup.co.uk

17 A student uses a motion-sensor connected to a laptop to investigate the motion of a hollow ball of mass 1.2×10^{-2} kg falling through air.

The ball is dropped from rest. It reaches terminal velocity before it reaches the ground.

The upthrust on the ball is negligible.

Fig. 17 shows the variation with time t of the velocity v of the ball as it falls towards the ground.

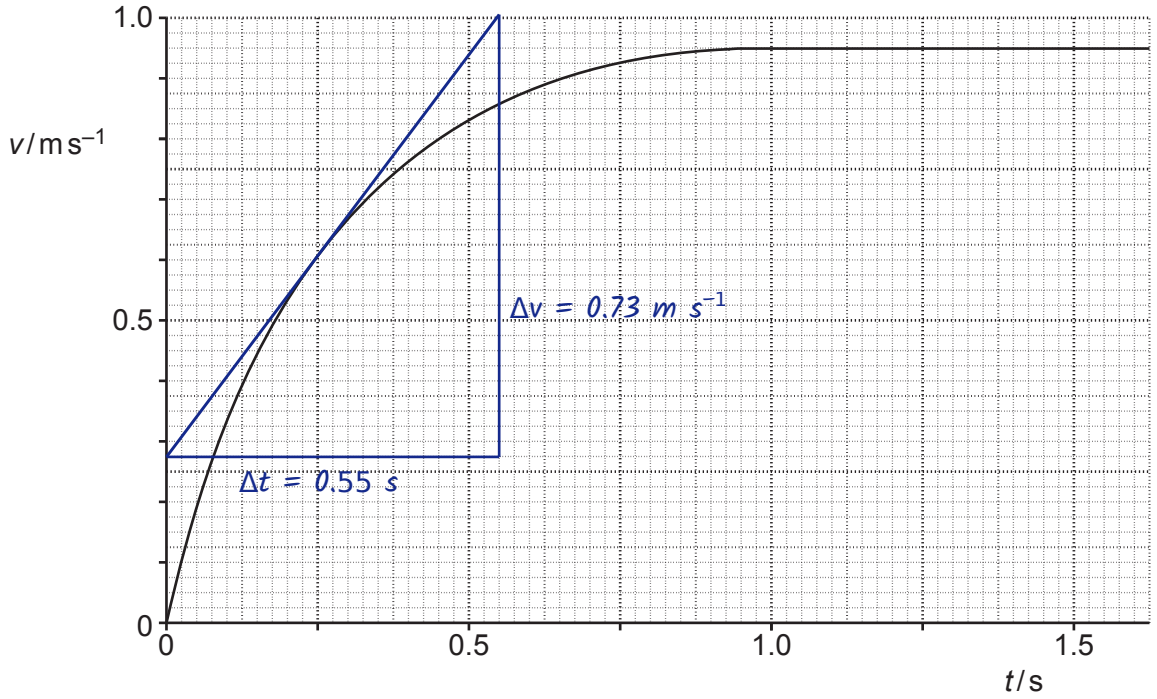

Fig. 17

(a) Draw a tangent to the curve at $t = 0.25$ s and determine the acceleration of the ball.

tangent drawn at t = 0.25 s: from (0, 0.27) to (0.55, 1.00)

acceleration = gradient = Δv / Δt

= (1.00 − 0.27) / (0.55 − 0) = 0.73 / 0.55

= 1.3 m s^{-2}

acceleration = ...1.3..... m s^{-2} **[3]**

© OCR 2019

(b) Calculate the resultant force F acting on the ball at $t = 0.25$ s.

$F = ma = 1.2 \times 10^{-2} \times 1.3 = 0.0156$ N

F = 0.016 N **[1]**

(c) Use your answer in **(b)** to calculate the drag on the ball at time $t = 0.25$ s.

weight $W = mg = 1.2 \times 10^{-2} \times 9.81 = 0.118$ N

resultant force = weight − drag

$0.0156 = 0.118 - \text{drag}$

drag $= 0.118 - 0.0156 = 0.10$ N

drag = 0.10 N **[3]**

(d) The student now adds a small amount of sand inside the hollow ball.
As before, the ball is dropped from rest and it also reaches terminal velocity before it reaches the ground.

(i) Describe how the forces acting on the sand-filled ball at $v = 0.50\,\text{m s}^{-1}$ compare with the forces acting on the hollow ball at this speed.

The drag (air resistance) on the sand-filled ball is the same as on the hollow ball at this speed (same size and shape). But the weight of the sand-filled ball is greater, so the resultant (downward) force on it is larger. **[2]**

(ii) Explain why the terminal velocity of the sand-filled ball will be greater than the terminal velocity of the hollow ball.

At terminal velocity weight = drag. The sand-filled ball has a greater weight, so needs a greater drag to balance it. Drag increases with speed (same cross-sectional area), so it must fall faster before drag equals weight. **[2]**

© OCR 2019

stemup.co.uk

18 A mass hanging from a vertical spring is pulled down.
It is then released from rest at time $t = 0$.
The mass oscillates vertically in a **vacuum** with simple harmonic motion about the equilibrium position. The spring is in tension at all times.

Fig. 18.1 shows the position of the mass at $t = 0$.

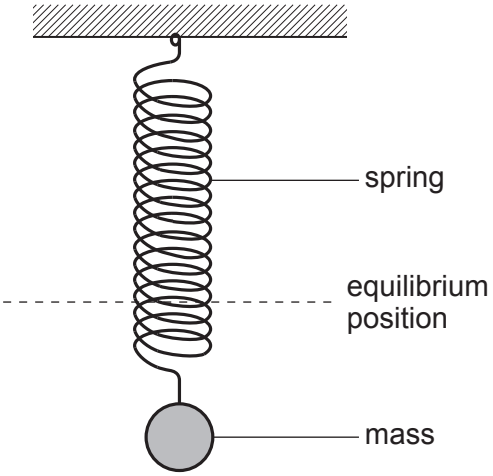

Fig. 18.1

At time $t = 6.5\,\text{s}$ the magnitude of the acceleration a of the mass is $3.6\,\text{m}\,\text{s}^{-2}$ and its displacement x is $4.6 \times 10^{-2}\,\text{m}$.

(a) **(i)** Use the defining equation for simple harmonic motion to show that the natural frequency f_0 of the mass-spring system is about 1.4 Hz.

defining equation: $a = -\omega^2 x$

$\omega^2 = a / x = 3.6 / 4.6 \times 10^{-2} = 78.3$

$\omega = \sqrt{78.3} = 8.85$ rad s^{-1}

$\omega = 2\pi f_0$ so $f_0 = 8.85 / 2\pi$

$f_0 = 1.41$ Hz (about 1.4 Hz)

[3]

© OCR 2019

(ii) Calculate the amplitude A of the oscillations.

released from the lowest point at $t = 0$, so $x = A \cos \omega t$

$A = x / \cos(\omega t) = 4.6 \times 10^{-2} / \cos(2\pi \times 1.4 \times 6.5)$

$= 4.6 \times 10^{-2} / 0.809$ (calculator in radians)

$A = 0.057$ m

A = 0.057 m **[2]**

(b) The mass-spring system shown in Fig. 18.1 is now made to oscillate in **air**.

Different types of energy are involved in the oscillations of this mass-spring system.

Describe the energy changes that will take place as the mass moves from the lowest point in its motion through the equilibrium position to the highest point in its motion.

Lowest point to equilibrium: elastic potential energy (EPE) decreases and is transferred to kinetic energy (KE) and gravitational potential energy (GPE).

Equilibrium to highest point: KE and EPE are transferred to GPE.

So EPE decreases and GPE increases from bottom to top. KE is zero at the lowest point, maximum at the equilibrium position and zero at the highest point.

In air there is damping: work is done against air resistance and the air gains thermal energy, so the total energy of the mass and spring decreases over time. **[4]**

Question 18 continues on page 16

© OCR 2019

stemup.co.uk

(c) Fig. 18.2 shows the mass and spring now attached to a mechanical vibrator, which can oscillate with variable frequency.

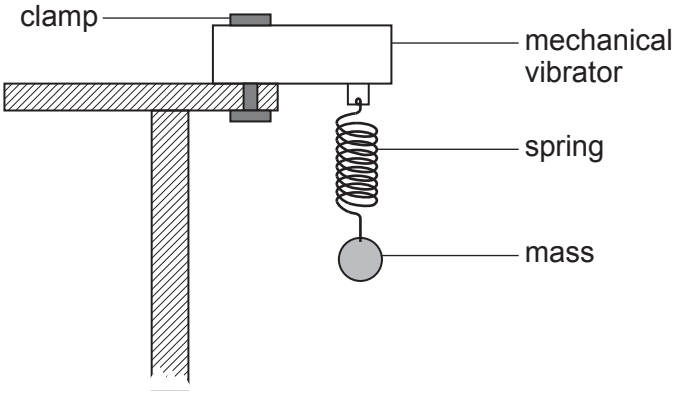

Fig. 18.2

The mass oscillates in air.

(i) The vibrator frequency is varied from 0 Hz to 2.5 Hz.
On Fig. 18.3, sketch a graph to show the variation with vibrator frequency of the amplitude of the mass. Label your graph **K**.

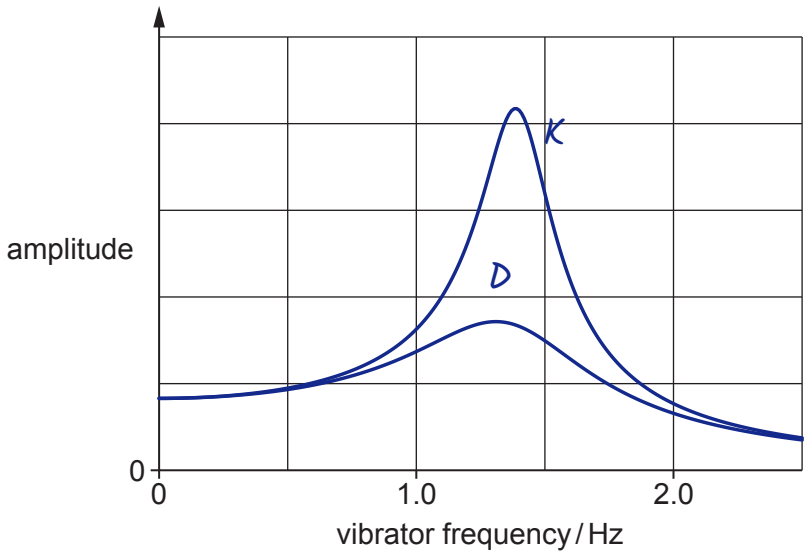

Fig. 18.3

[2]

(ii) A light disc is now attached to the mass to increase the damping.
The vibrator frequency is again varied from 0 Hz to 2.5 Hz.
Sketch a second graph on Fig. 18.3 to show the new variation of the amplitude.
Label this graph **D**. **[1]**

© OCR 2019

(iii) Explain why the phenomenon demonstrated in this experiment can cause problems for engineers when designing suspended footbridges.

People walking (or wind) give a periodic driving force. If the driving frequency is close to the natural frequency of the bridge, resonance occurs and the bridge oscillates with a very large amplitude, which can damage it or make it collapse. **[2]**

© OCR 2019

stemup.co.uk

19 **(a)** A car is travelling along a straight road at $18\,m\,s^{-1}$.
The driver sees an obstacle and after 0.50 s applies the brakes.
The **stopping** distance of the car is 38 m.

Calculate the magnitude of the deceleration of the car when the brakes are applied.

thinking distance = 18 × 0.50 = 9.0 m

braking distance = 38 − 9.0 = 29 m

$v^2 = u^2 + 2as$: $0 = 18^2 - 2 \times a \times 29$

$a = 18^2 / (2 \times 29) = 324 / 58 = 5.6\ m\ s^{-2}$

deceleration = ...5.6..... $m\,s^{-2}$ **[3]**

(b)* A student rolls a marble at different speeds on a carpet to model the braking of a car.

The student wishes to investigate how the total distance *x* travelled before the marble stops (braking distance) depends on its initial speed *v*.

The speed *v* and distance *x* are related by the equation $\frac{1}{2}mv^2 = Fx$ where *m* is the mass of the marble and *F* is the constant frictional force acting on the marble.

- Describe how an experiment can be conducted in the laboratory to investigate the relationship between *v* and *x*.
- Explain how the data can be analysed to determine *F*. **[6]**

Set up a curved ramp clamped at the edge of a long, level strip of carpet.
Release the marble from rest from a measured height h on the ramp so it always reaches the carpet with the same speed for that height. Change v by changing the release height.
Measure v at the bottom of the ramp with a light gate connected to a data-logger: v = diameter of marble / time the beam is blocked (diameter measured with vernier calipers). A motion sensor or video analysis frame by frame could also be used.
Measure the braking distance x from the light gate to where the marble

© OCR 2019

stops with a metre rule or tape measure. Measure the mass m of the marble with a top-pan balance.

Use at least six different release heights and repeat each one three times, calculating the mean x and mean v. Keep the same marble, carpet and ramp position (control variables), and stop the marble rolling off the bench.

Analysis: $\frac{1}{2}mv^2 = Fx$ so $x = (m / 2F)\ v^2$. Plot a graph of x (y-axis)

Additional answer space if required.

against v^2 (x-axis). If the relationship is correct, the graph is a straight line through the origin.

Draw the line of best fit and determine its gradient using a large triangle.

Gradient = m / 2F, so F = m / (2 × gradient).

© OCR 2019

stemup.co.uk

20 A bicycle manufacturer carries out tests on the braking system of their new model.
A cyclist on this new bicycle travels at a constant initial speed U.
The cyclist applies the brakes at time $t = 0$ and the bicycle comes to a stop at time $t = 2.0$ s.

Fig. 20.1 shows the variation of the braking force F on the bicycle with time t.

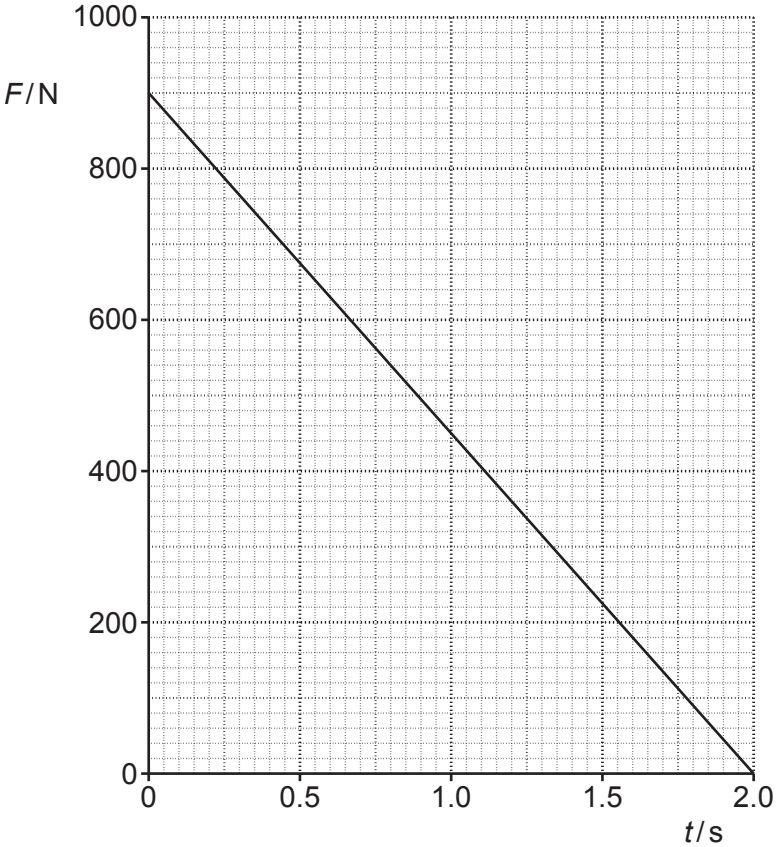

Fig. 20.1

(a) Use Newton's second law of motion to explain the physical quantity represented by the area under the graph shown in Fig. 20.1.

Newton's second law: force = rate of change of momentum, F = Δ(mv) / Δt, so FΔt = Δ(mv). So the area under the graph is the impulse, which equals the change in momentum (of bicycle and cyclist). **[2]**

© OCR 2019

(b) The total mass of cyclist and bicycle is 71 kg.

Use Fig. 20.1 to calculate the initial speed U.

area under graph = change in momentum

area = ½ × 2.0 × 900 = 900 N s

$mU = 900$, $U = 900 / 71$

$U = 12.7\ m\ s^{-1} \approx 13\ m\ s^{-1}$

U = ...13..... $m\,s^{-1}$ **[2]**

(c) Complete Fig. 20.2 to show the variation of the speed of the bicycle from $t = 0$ to $t = 2.0$ s.

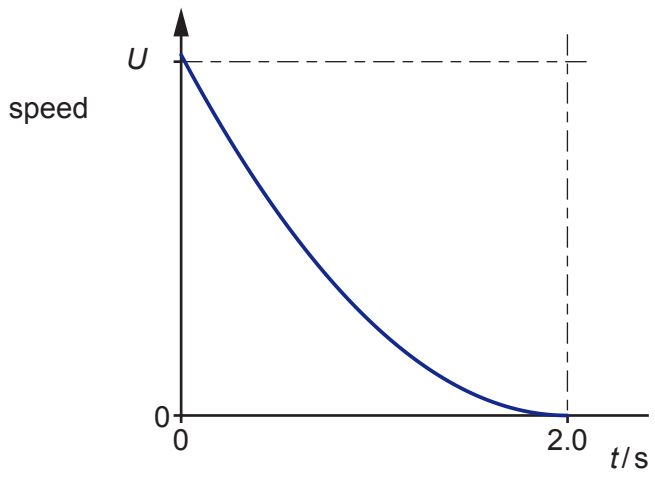

Fig. 20.2

[2]

© OCR 2019

stemup.co.uk

21 A substance can exist as a crystalline solid, a liquid or a gas.
A solid sample of the substance is placed in a sealed container and heated at a constant rate until it changes into a gas.

Fig. 21 shows the variation with time t of the temperature θ for the substance.

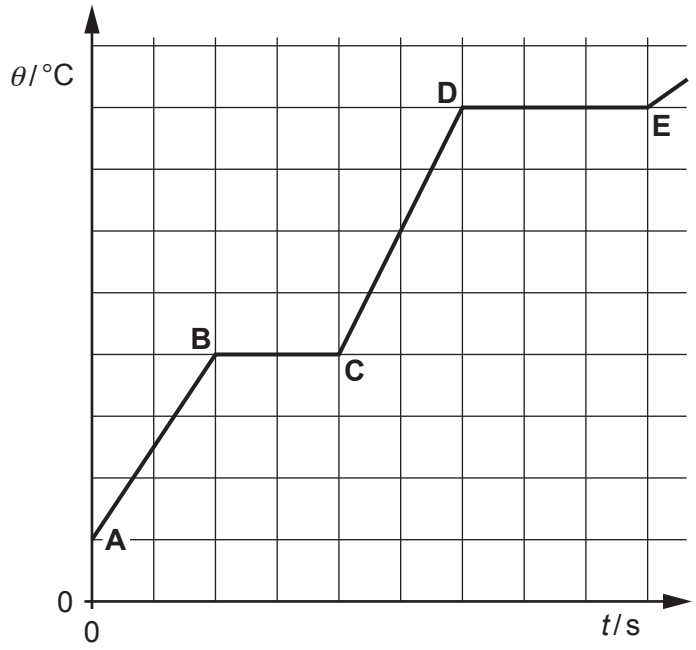

Fig. 21

(a) Use the kinetic theory of matter to describe the solid phase (section **AB**) and the liquid phase (section **CD**) in terms of the motion and arrangement of the molecules of the substance.

Section **AB**: The molecules are close together in a fixed, regular arrangement (lattice).
They vibrate about fixed positions. As the temperature increases from A to B they vibrate with increasing amplitude, so the mean spacing between the molecules increases slightly.

Section **CD**: The molecules are still close together (slightly further apart than in the solid) but there is no regular structure.
The molecules are free to move around and slide past each other randomly (the liquid can flow). From C to D they move with increasing speed (greater mean kinetic energy).

[4]

© OCR 2019

(b) Use Fig. 21 to explain how the specific heat capacity of the liquid compares with the specific heat capacity of the solid.

$E = mc\Delta\theta$ and energy is supplied at a constant rate. The gradient of CD is larger than AB, so in the same time (same energy) $\Delta\theta$ is larger for the liquid. So the specific heat capacity of the liquid is less than that of the solid. **[2]**

(c) State what is meant by the **internal energy** of the substance.

The sum of the random kinetic energies and potential energies of all the molecules in the substance. **[1]**

(d) Beyond the point **E** in Fig. 21, the substance behaves as an ideal gas.

(i) The mass of a gas molecule is 4.8×10^{-26} kg.
Calculate the root mean square speed of the gas molecules at a temperature of 250 °C.

$T = 250 + 273 = 523$ K

$\frac{1}{2}m\, c_{rms}^2 = 3/2\ kT$ so $c_{rms}^2 = 3kT / m$

$c_{rms}^2 = 3 \times 1.38 \times 10^{-23} \times 523 / 4.8 \times 10^{-26} = 4.5 \times 10^5$

$c_{rms} = 670\ m\ s^{-1}$

root mean square speed = 670 m s^{-1} **[3]**

(ii) Calculate the internal energy of 1.3 moles of the gas at 250 °C.

number of molecules $= 1.3 \times 6.02 \times 10^{23} = 7.83 \times 10^{23}$

mean KE $= 3/2\ kT = 1.5 \times 1.38 \times 10^{-23} \times 523 = 1.08 \times 10^{-20}$ J

ideal gas: internal energy = total KE $= 7.83 \times 10^{23} \times 1.08 \times 10^{-20}$

$= 8.5 \times 10^3$ J

internal energy = 8.5×10^3 J **[3]**

© OCR 2019

stemup.co.uk

22 A screw is used to hang a wooden sign on a wall. It is screwed into the wall using a screwdriver.

(a) The width of the screwdriver blade is 5.0×10^{-3} m from end to end.
The ends of the blade exert equal and opposite forces on the screw.
The magnitude of each force is 350 N, as shown in Fig. 22.1.

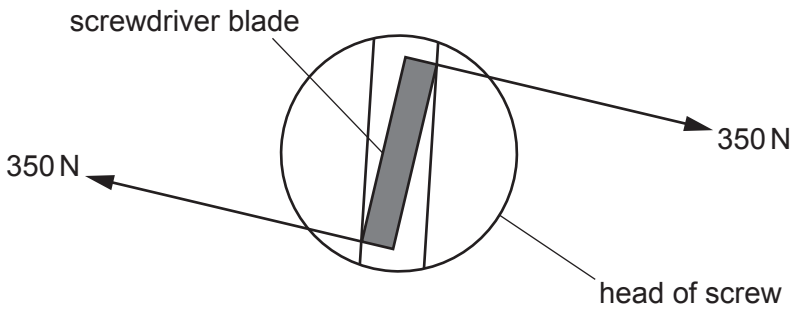

Fig. 22.1

Calculate the magnitude of the torque of the couple produced by the forces at each end of the screwdriver blade.

torque of couple = one force × perpendicular separation

$= 350 \times 5.0 \times 10^{-3} = 1.75$ N m

torque = ...1.8..... N m **[1]**

© OCR 2019

(b) The wooden sign is then hung on the screw at point **A**.
The forces acting on the screw are shown in Fig. 22.2.

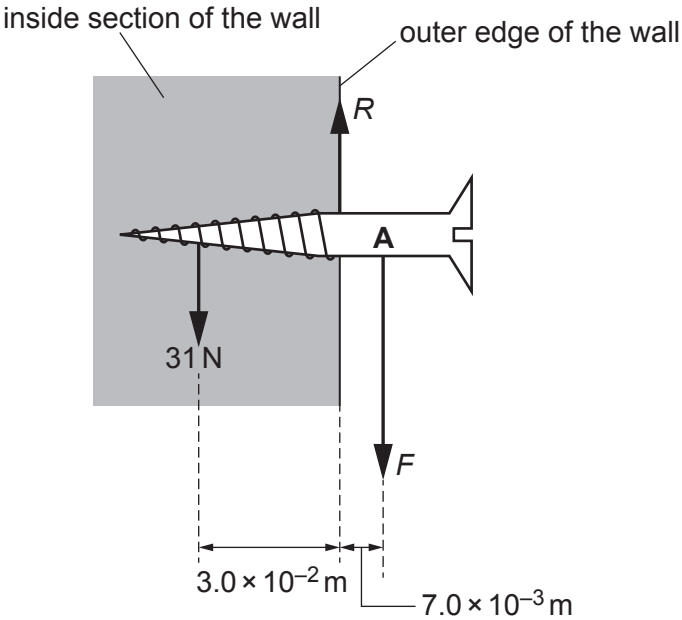

Fig. 22.2

The inside section of the wall exerts a maximum downwards force of 31 N at a distance of 3.0×10^{-2} m from the outer edge of the wall.
The hanging wooden sign exerts a force *F* at a distance 7.0×10^{-3} m from the outer edge of the wall.
There is a force *R* acting on the screw at the outer edge of the wall.
The mass of the screw is negligible.

Use the principle of moments to calculate the maximum mass of the wooden sign.

moments about the outer edge of the wall:

$F \times 7.0 \times 10^{-3} = 31 \times 3.0 \times 10^{-2}$

$F = 0.93 / 7.0 \times 10^{-3} = 133$ N

mass = F / g = 133 / 9.81 = 13.5 kg ≈ 14 kg

mass = ...14..... kg **[3]**

© OCR 2019

stemup.co.uk

23 **(a)*** In 2017, an ultra-cool star TRAPPIST-1 was discovered with at least five of its own orbiting planets. Astronomers are interested about the possibility of finding life on some of the planets orbiting TRAPPIST-1.

The table below shows some data.

	TRAPPIST-1	**Sun**
Luminosity *L* / W	2.0×10^{23}	3.8×10^{26}
Surface temperature *T* / K	2500	5800
Radius of star / m	*R*	7.0×10^{8}
Distance between Earth and Sun / m		1.5×10^{11}
Distance between planets and TRAPPIST-1 / m	1.6×10^{9} to 9.0×10^{9}	

The temperature *T* in kelvin of a planet, its distance *d* from the star and the luminosity *L* of the star are related by the expression

$$\frac{T^4 d^2}{L} = \text{constant.}$$

- The average temperature of the Earth is about 290 K. Explain how life may be possible on some of the planets orbiting TRAPPIST-1.
- Use your knowledge of luminosity to show that the radius *R* of TRAPPIST-1 is smaller than the Sun.
- Support your answers by calculations. **[6]**

TRAPPIST-1 is cooler (2500 K) and much less luminous than the Sun, but its planets are much closer to it than the Earth is to the Sun.

For the Earth: $T^4d^2 / L = 290^4 \times (1.5 \times 10^{11})^2 / 3.8 \times 10^{26} = 4.2 \times 10^5$ (the constant).

Innermost planet ($d = 1.6 \times 10^9$ m): $T^4 = 4.2 \times 10^5 \times 2.0 \times 10^{23} / (1.6 \times 10^9)^2 = 3.3 \times 10^{10}$, so $T \approx 430$ K.

Outermost planet ($d = 9.0 \times 10^9$ m): $T^4 = 4.2 \times 10^5 \times 2.0 \times 10^{23} / (9.0 \times 10^9)^2 = 1.0 \times 10^9$, so $T \approx 180$ K.

So the planet temperatures range from about 180 K to 430 K, which includes 290 K. For $T = 290$ K: $d^2 = 4.2 \times 10^5 \times 2.0 \times 10^{23} / 290^4$, so $d = 3.4 \times 10^9$ m, which is within the range of distances. So a planet with an

© OCR 2019

Earth-like temperature (liquid water) is possible and life may exist there, although temperature is not the only factor (an atmosphere and water are also needed).

Radius: $L = 4\pi R^2 \sigma T^4$, so $R = \sqrt{(L / 4\pi\sigma T^4)} = \sqrt{(2.0 \times 10^{23} / (4\pi \times 5.67 \times 10^{-8} \times 2500^4))} = 8.5 \times 10^7$ m.

This is smaller than the radius of the Sun, 7.0×10^8 m (about one eighth).

Also $R^2 \propto L / T^4$, and L / T^4 is smaller for TRAPPIST-1 (5.1×10^9) than for the Sun (3.4×10^{11}).

Additional answer space if required.

Question 23 continues on page 28

© OCR 2019

stemup.co.uk

(b) Kepler's third law can be applied to a satellite in a geostationary orbit around the Earth.

(i) Complete the equation for Kepler's third law below.
You do not need to define any of the terms.

$$T^2 = \frac{4\pi^2}{GM} r^3$$

[1]

(ii) The mass of Earth is 6.0×10^{24} kg.
Calculate the radius of the circular path of a satellite in a geostationary orbit around the Earth.

geostationary: $T = 24$ hours $= 86400$ s

$T^2 = (4\pi^2 / GM)\, r^3$

$r^3 = GMT^2 / 4\pi^2 = 6.67 \times 10^{-11} \times 6.0 \times 10^{24} \times 86400^2 / 4\pi^2$

$r^3 = 7.57 \times 10^{22}\ m^3$

$r = 4.23 \times 10^7\ m$

radius = 4.23×10^7 m **[2]**

© OCR 2019

24 **(a)** Proxima Centauri is the closest star to Earth.
Fig. 24.1 shows the apparent positions of this star against the background of very distant stars as seen from the Earth over a period of exactly 6 months.

scale: 2.0 cm = 1.0 arc second

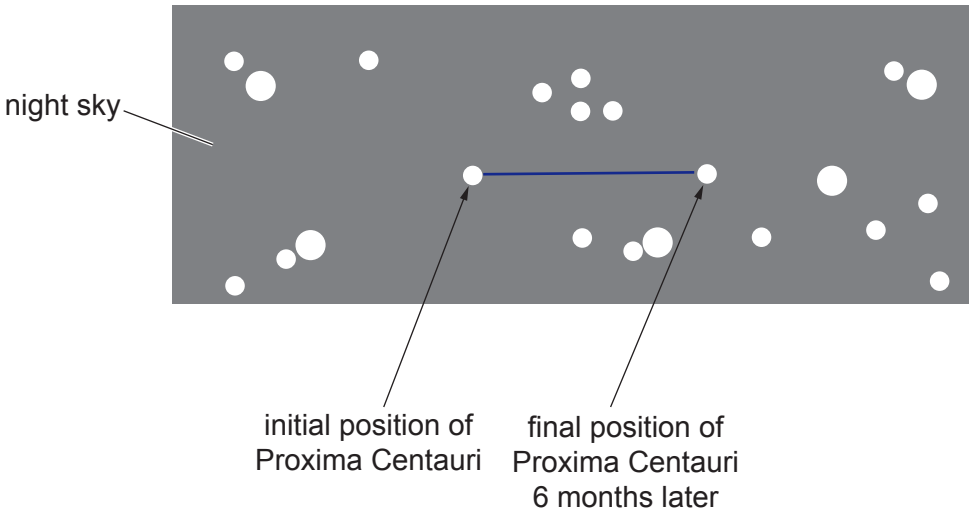

Fig. 24.1

The parallax angle for Proxima Centauri can be determined from Fig. 24.1 using the scale provided.

(i) Show that the parallax angle *p* for Proxima Centauri is about 0.8 arc second.

distance between the two positions = 3.1 cm

this corresponds to 2p (positions 6 months apart)

2p = 3.1 / 2.0 = 1.55 arc second

p = 1.55 / 2 = 0.78 arc second ≈ 0.8 arc second

[2]

Question 24 continues on page 30

© OCR 2019

stemup.co.uk

(ii) Use your answer in **(i)** to calculate the distance *d* of Proxima Centauri from the Earth in light-years (ly).

1 pc = 3.26 ly

$d = 1 / p = 1 / 0.8 = 1.25$ pc

$d = 1.25 \times 3.26$

$d = 4.1$ ly

d = ...4.1..... ly **[2]**

(b) The galaxies in the Universe may be assumed to be distributed uniformly through space.

In this model, the separation between two neighbouring galaxies is 1.4×10^{23} m and each galaxy occupies a cube of space of volume 2.7×10^{69} m^3 as shown in Fig. 24.2.

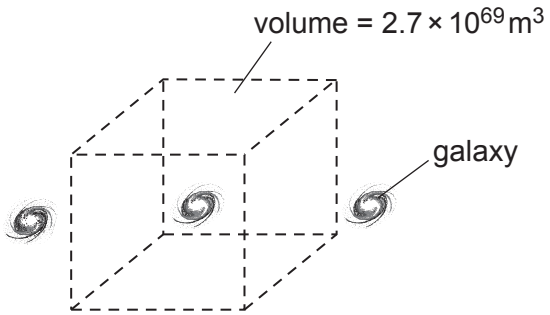

Fig. 24.2

There are on average 10^{11} stars in each galaxy and the mass of an average star is about 2.0×10^{30} kg.

© OCR 2019

(i) Estimate the gravitational force between two neighbouring galaxies.

mass of galaxy $M = 10^{11} \times 2.0 \times 10^{30} = 2.0 \times 10^{41}$ kg

$F = GMM / r^2 = 6.67 \times 10^{-11} \times (2.0 \times 10^{41})^2 / (1.4 \times 10^{23})^2$

$F = 1.4 \times 10^{26}$ N

force = 1.4×10^{26} N **[2]**

(ii) Show that the mean density of the Universe is about 7×10^{-29} kg m^{-3}.

density = mass / volume = $10^{11} \times 2.0 \times 10^{30} / 2.7 \times 10^{69}$

density = 7.4×10^{-29} kg m^{-3} (about 7×10^{-29} kg m^{-3})

[1]

(iii) Suggest why the actual mean density of the Universe is different from the value calculated in **(ii)**.

The model is too simple: there is also dark matter (and black holes, gas) adding mass. **[1]**

END OF QUESTION PAPER

© OCR 2019

ADDITIONAL ANSWER SPACE

If additional space is required, you should use the following lined page(s). The question number(s) must be clearly shown in the margin(s).

OCR
Oxford Cambridge and RSA

Copyright Information

OCR is committed to seeking permission to reproduce all third-party content that it uses in its assessment materials. OCR has attempted to identify and contact all copyright holders whose work is used in this paper. To avoid the issue of disclosure of answer-related information to candidates, all copyright acknowledgements are reproduced in the OCR Copyright Acknowledgements Booklet. This is produced for each series of examinations and is freely available to download from our public website (www.ocr.org.uk) after the live examination series.

If OCR has unwittingly failed to correctly acknowledge or clear any third-party content in this assessment material, OCR will be happy to correct its mistake at the earliest possible opportunity.

For queries or further information please contact The OCR Copyright Team, The Triangle Building, Shaftesbury Road, Cambridge CB2 8EA.

OCR is part of the Cambridge Assessment Group; Cambridge Assessment is the brand name of University of Cambridge Local Examinations Syndicate (UCLES), which is itself a department of the University of Cambridge.

© OCR 2019