Oxford Cambridge and RSA

A Level Physics A

H556/03 Unified physics

Thursday 29 June 2017 – Morning

Time allowed: 1 hour 30 minutes

You must have:
- The Data, Formulae and Relationship Booklet (sent with general stationery)

You may use:
- a scientific calculator
- a ruler (cm/mm)

First name	
Last name	StemUp Model Solution

Centre number						Candidate number				

INSTRUCTIONS
- Use black ink. You may use an HB pencil for graphs and diagrams.
- Complete the boxes above with your name, centre number and candidate number.
- Answer **all** the questions.
- Write your answer to each question in the space provided. If additional space is required, use the lined page(s) at the end of this booklet. The question number(s) must be clearly shown.
- Do **not** write in the barcodes.

INFORMATION
- The total mark for this paper is **70**.
- The marks for each question are shown in brackets **[ ]**.
- Quality of extended responses will be assessed in questions marked with an asterisk (*).
- This document consists of **20** pages.

© OCR 2017 [601/4743/X]
DC (KN/SG) 139588/6
OCR is an exempt Charity

stemup.co.uk

Answer **all** the questions

1 A stationary uranium-238 nucleus $\left({}^{238}_{92}\text{U}\right)$ decays into a nucleus of thorium-234 by emitting an alpha-particle.

(a) The chemical symbol for thorium is Th. Write a nuclear equation for this decay.

$${}^{238}_{92}U \rightarrow {}^{234}_{90}Th + {}^{4}_{2}He \quad \text{(alpha-particle)}$$

[2]

(b) The mass of the uranium nucleus is 4.0×10^{-25} kg. After the decay the thorium nucleus has a speed of 2.4×10^{5} m s^{-1}.

Calculate the kinetic energy, in MeV, of the alpha-particle.

mass of α-particle ≈ 4u = $4 \times 1.661 \times 10^{-27} = 6.64 \times 10^{-27}$ kg

mass of Th nucleus = $4.0 \times 10^{-25} - 0.0664 \times 10^{-25} = 3.93 \times 10^{-25}$ kg

momentum conserved (initial momentum zero): $m_{Th}v_{Th} = m_{\alpha}v_{\alpha}$

$3.93 \times 10^{-25} \times 2.4 \times 10^{5} = 9.44 \times 10^{-20}$ kg m s^{-1}

$v_{\alpha} = 9.44 \times 10^{-20} \div 6.64 \times 10^{-27} = 1.42 \times 10^{7}$ m s^{-1}

k.e. = $\frac{1}{2}mv^2 = \frac{1}{2} \times 6.64 \times 10^{-27} \times (1.42 \times 10^{7})^2 = 6.70 \times 10^{-13}$ J

in MeV: $6.70 \times 10^{-13} \div 1.60 \times 10^{-13} = 4.19$ MeV

kinetic energy = ...4.19..... MeV **[4]**

(c) The uranium-238 $\left({}^{238}_{92}\text{U}\right)$ nucleus starts the decay chain which ends with a nucleus of lead-206 $\left({}^{206}_{82}\text{Pb}\right)$.

Show that 14 particles are emitted during this decay chain. Explain your reasoning.

Change in mass number = 238 − 206 = 32. Only α-decay changes A (by 4), so number of α-particles = 32 ÷ 4 = 8.

8 α-decays reduce Z by 16: 92 − 16 = 76, but lead has Z = 82, so Z must rise by 6. Each β^- decay raises Z by 1 (A unchanged), so 6 β^- particles.

Total particles = 8 α + 6 β^- = 14

[3]

© OCR 2017

2 A small thin rectangular slice of semiconducting material has width a and thickness b and carries a current I. The current is due to the movement of electrons. Each electron has charge $-e$ and mean drift velocity v. A uniform magnetic field of flux density B is perpendicular to the direction of the current and the top face of the slice as shown in Fig. 2.1.

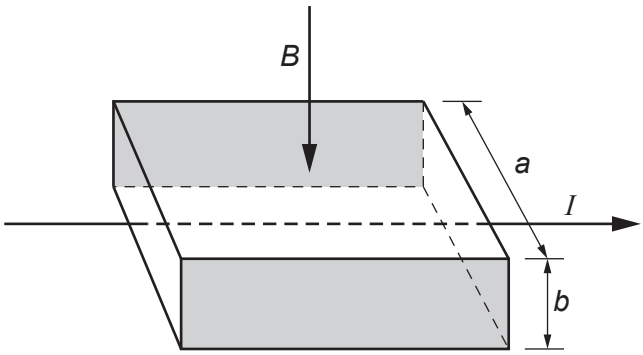

Fig. 2.1

(a) As soon as the current is switched on, the moving electrons in the current are forced towards the shaded rear face of the slice where they are stored. This causes the shaded faces to act like charged parallel plates. Each electron in the current now experiences both electric and magnetic forces. The resultant force on each electron is now zero.

Write the expressions for the electric and magnetic forces acting on each electron and use these to show that the magnitude of the potential difference V between the shaded faces is given by

$$V = Bva.$$

magnetic force on each electron: $F = Bev$

electric field between the faces: $E = V/a$, so electric force $F = eE = eV/a$

resultant force zero, so the forces are equal and opposite:

$Bev = eV/a \implies V = Bva$

[3]

© OCR 2017

stemup.co.uk

(b) Here are some data for the slice in a particular experiment.

number of conducting electrons per cubic metre, $n = 1.2 \times 10^{23}\ \text{m}^{-3}$
$a = 5.0\,\text{mm}$
$b = 0.20\,\text{mm}$
$I = 60\,\text{mA}$
$B = 0.080\,\text{T}$

Use this data to calculate

(i) the mean drift velocity v of electrons within the semiconductor

$I = nAev$, where $A = ab = 5.0 \times 10^{-3} \times 0.20 \times 10^{-3} = 1.0 \times 10^{-6}\ \text{m}^2$

$v = I/(nAe) = 60 \times 10^{-3} \div (1.2 \times 10^{23} \times 1.0 \times 10^{-6} \times 1.60 \times 10^{-19})$

$v = 3.1\ \text{m s}^{-1}$

v = ...3.1..... m s^{-1} **[3]**

(ii) the potential difference V between the shaded faces of the slice.

$V = Bva = 0.080 \times 3.1 \times 5.0 \times 10^{-3} = 1.2 \times 10^{-3}\ \text{V}$

V = ...1.2×10^{-3}..... V **[1]**

© OCR 2017

(c) The slice is mounted and used as a measuring instrument called a Hall probe. A cell is connected to provide the current in the slice. The potential difference across the slice is measured by a separate voltmeter.

A student wants to measure the magnetic flux density between the poles of two magnets mounted on a steel yoke as shown in Fig. 2.2. The magnitude of the flux density is between 0.02 T and 0.04 T.

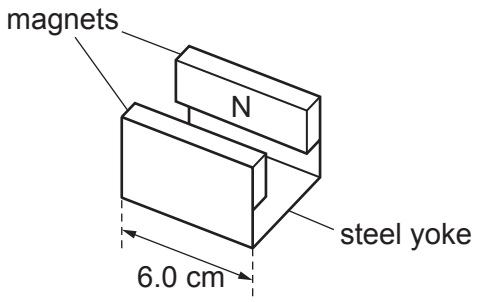

Fig. 2.2

(i) Suggest **one** reason why this Hall probe is **not** a suitable instrument to measure the magnetic flux density for the arrangement shown in Fig. 2.2.

V would be very small (about 0.5 mV, less than 1 mV) so it is hard to measure accurately; also the Hall probe only compares fields, it needs calibrating to convert V into B. **[1]**

(ii) Another method of measuring the magnetic flux density for the arrangement shown in Fig. 2.2 is to insert a current-carrying wire between the poles of the magnet.
Explain how the magnetic flux density can be determined using this method and discuss which measurement in the experiment leads to the greatest uncertainty in the value for the magnetic flux density.

Use F = BIL; clamp a wire between the poles, perpendicular to B, with the magnets on a top-pan balance; change in reading × g = force F. Measure F for several currents I; plot F against I; gradient = BL, so B = gradient ÷ L.

Greatest uncertainty: L, the length of wire in the field (6.0 cm). The field edge is not sharp, so ±1 mm in 60 mm or more gives the largest % uncertainty. **[4]**

© OCR 2017

stemup.co.uk

3 A student is investigating how the discharge of a capacitor through a resistor depends on the resistance of the resistor.
The equipment is set up as shown in Fig. 3.1.

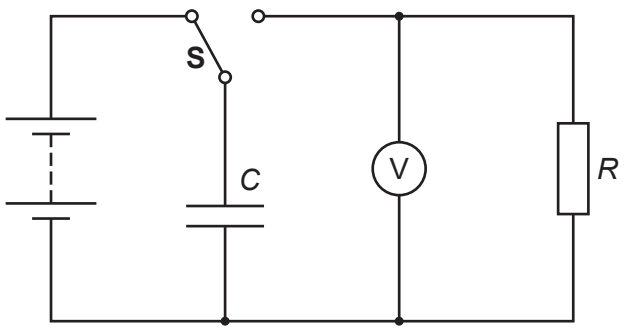

Fig. 3.1

The student charges the capacitor of capacitance C and then discharges it through a resistor of resistance R using switch **S**. After a time t = 15.0 s the student records the potential difference V across the capacitor. The student repeats this procedure for different values of R.

It is suggested that V and R are related by the equation

$$V = V_0 e^{-\frac{t}{CR}}$$

where V_0 is the initial potential difference across the capacitor and t is the time over which the capacitor has discharged.

(a) The student decides to plot a graph of ln (V/V) on the y-axis against $\frac{1}{R}$ on the x-axis to obtain a straight line graph. Show that the magnitude of the gradient is equal to $\frac{15}{C}$.

$\ln V = \ln V_0 - t/(CR)$, so $\ln V = -(t/C) \times (1/R) + \ln V_0$

compare with $y = mx + c$: gradient $m = -t/C$

$t = 15.0$ s, so magnitude of gradient $= 15/C$

[2]

(b) Values of R and V at t = 15.0 s are given in the table below.

R/kΩ	V/V	$\left(\frac{1}{R}\right)$/10^{-6} Ω^{-1}	ln (V/V)
56	3.0 ± 0.2	18	1.10 ± 0.07
68	3.7 ± 0.2	15	1.31 ± 0.06
100	5.0 ± 0.2	10	1.61 ± 0.04
150	6.4 ± 0.2	6.7	1.86 ± 0.03
220	7.3 ± 0.2	4.5	1.99 ± 0.03
330	8.1 ± 0.2	3.0	2.09 ± 0.03

(i) Complete the missing value of ln (V/V) and its absolute uncertainty in the table above.
[1]

© OCR 2017

(ii) Use the data to complete the graph of Fig. 3.2. Four of the six points have been plotted for you. **[2]**

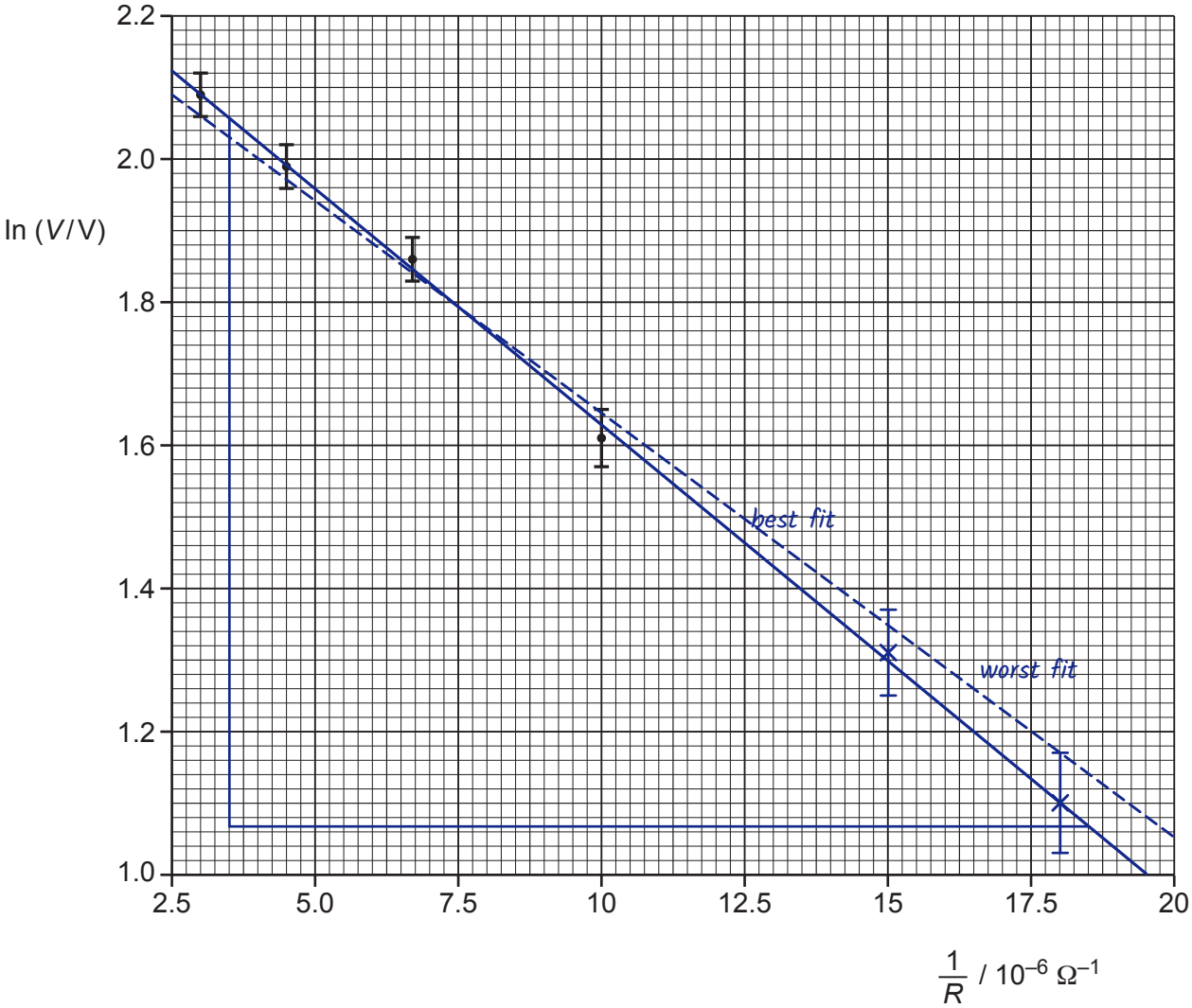

Fig. 3.2

(iii) Use the graph to determine a value for *C*. Include the absolute uncertainty and an appropriate unit in your answer.

gradient of best-fit line = (1.067 − 2.057) ÷ ((18.5 − 3.5) × 10^{-6})

= −6.6 × 10^4 Ω, so 15/*C* = 6.6 × 10^4 ⟹ *C* = 15 ÷ 6.6 × 10^4 = 2.3 × 10^{-4} F

worst-fit line through (3.0, 2.06) and (18.0, 1.17): gradient = −5.9 × 10^4 Ω

C_{worst} = 15 ÷ 5.9 × 10^4 = 2.6 × 10^{-4} F

uncertainty = 2.6 × 10^{-4} − 2.3 × 10^{-4} = 0.3 × 10^{-4} F

C = 2.3 × 10^{-4} ± 0.3 × 10^{-4} unit F **[4]**

© OCR 2017

stemup.co.uk

(c) Determine the value of R, in kΩ, for which the capacitor discharges to 10% of its original potential difference in 15.0 s. Show your working.

$V = 0.10V_0$, so $\ln(0.10) = -15/(CR)$

$R = -15 \div (C \ln 0.10) = 15 \div (2.30 \times 2.3 \times 10^{-4})$

$R = 0.65 \div 2.3 \times 10^{-4} = 2.8 \times 10^{4}\ \Omega = 28\ k\Omega$

R = ...28..... kΩ **[2]**

© OCR 2017

BLANK PAGE

Question 4 begins on page 10.

© OCR 2017

stemup.co.uk

4 **(a)*** You are given an unmarked sealed square box which has four identical terminals at each corner.

Fig 4.1 shows the circuit diagram for the contents of the box with the four terminals labelled **A**, **B**, **C** and **D**.

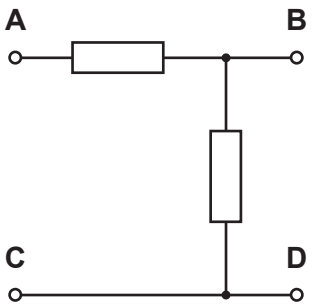

Fig. 4.1

One of the resistors in the box has resistance 220 Ω. The other resistor has resistance 470 Ω. Two of the terminals are connected by a wire.

The four terminals on your unmarked sealed box are **not** labelled.

You are given a 6.0 V d.c. supply, a 100 Ω resistor (labelled R) and a digital ammeter.

Plan an experiment to determine the arrangement of the components and identify which terminal of your unmarked sealed box is **A**, **B**, **C** and **D**.

A space has been left for you to draw circuit diagrams to illustrate your answer.

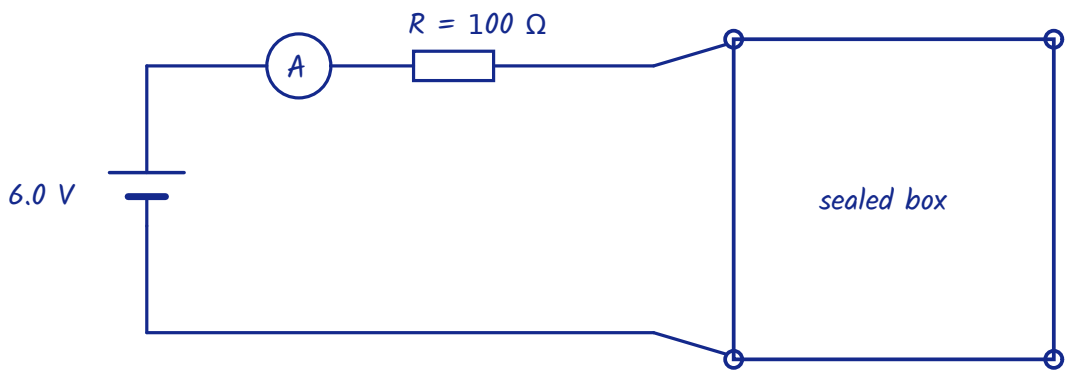

leads moved to each of the 6 pairs of terminals in turn

pair joined	R_{total} / Ω	I / mA
wire (C and D)	100	60
220 Ω resistor	320	19
470 Ω resistor	570	11
both resistors	790	7.6

© OCR 2017

Set up the series circuit shown: 6.0 V supply, digital ammeter and the 100 Ω resistor R, with two leads connected across a pair of terminals. R limits the current, so if the leads are across the wire there is no short circuit (I = 6.0/100 = 0.060 A).

Connect the leads to each of the six pairs of terminals in turn and record the current I. Use V = IR, R_{total} = 6.0/I, and subtract 100 Ω to find the resistance between each pair.

Expected results: wire only 60 mA (0 Ω); 220 Ω resistor 6.0/320 = 19 mA; 470 Ω resistor 6.0/570 = 11 mA; both resistors in series 6.0/790 = 7.6 mA.

The pair giving the largest current (60 mA, smallest resistance) is C and D, joined by the wire. These are adjacent corners.

Of the other two terminals, the one giving the smallest current (7.6 mA, 690 Ω, both resistors) with C and with D is A. The remaining terminal is B; B gives the same current with C and with D, through the resistor between the junction and D.

D is the corner diagonally opposite A and C is the corner next to A. The A to B reading shows which resistor is between A and B: 19 mA means 220 Ω (so 470 Ω is between the junction and D); 11 mA means 470 Ω.

[6]

© OCR 2017

stemup.co.uk

(b) A light-dependent resistor (LDR) is connected between points **X** and **Y** in the circuit of Fig. 4.2. The circuit is used to switch on a lamp during the hours of darkness.

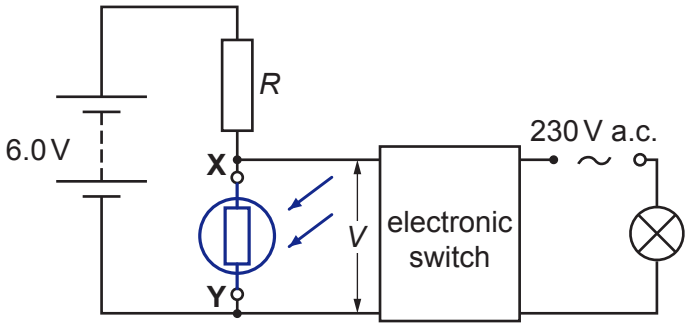

Fig. 4.2

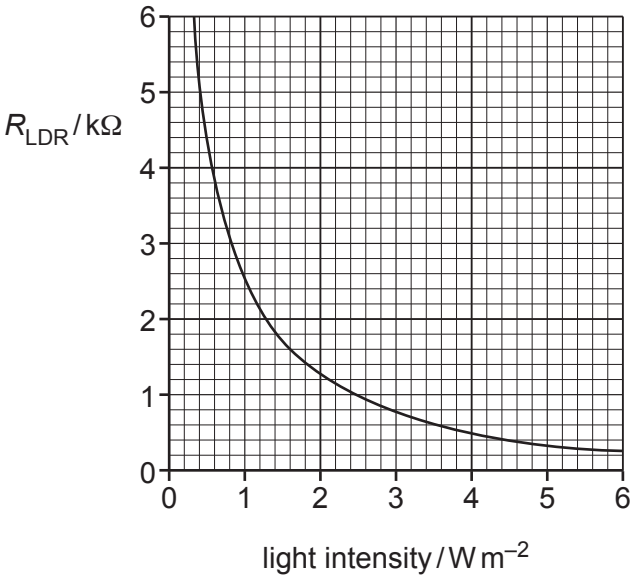

Fig. 4.3

(i) Draw the symbol for an LDR on Fig. 4.2 between **X** and **Y**. **[1]**

(ii) Fig. 4.3 shows how the resistance of the LDR varies with light intensity. The electronic switch closes when V across **XY** is 4.0 V and opens when V across **XY** is 2.4 V. The electronic switch draws a negligible current.

Calculate

1 the resistance R of the resistor for the lamp to switch on at a light intensity of 0.80 W m^{-2}

from Fig. 4.3, at 0.80 W m^{-2}: R_{LDR} = 3.0 kΩ

$I = V/R = 4.0 \div 3.0 \times 10^3 = 1.33 \times 10^{-3}$ A

p.d. across R = 6.0 − 4.0 = 2.0 V

$R = 2.0 \div 1.33 \times 10^{-3} = 1.5 \times 10^3$ Ω

R = ...1500..... Ω **[3]**

2 the light intensity of the surroundings at which the lamp switches off.

switch opens at 2.4 V: p.d. across R = 3.6 V, $I = 3.6 \div 1500 = 2.4 \times 10^{-3}$ A

$R_{LDR} = 2.4 \div 2.4 \times 10^{-3} = 1.0$ kΩ, from Fig. 4.3 this is 2.5 W m^{-2}

light intensity = ...2.5..... W m^{-2} **[2]**

© OCR 2017

BLANK PAGE

Question 5 begins on page 14.

© OCR 2017

stemup.co.uk

5 **(a)** A loudspeaker mounted on a bench is emitting sound of frequency 1.7 kHz to a microphone. Fig. 5.1 shows an illustration of the bulk movement of the air at one instant of time.

Fig. 5.1

The maximum displacement of the air particles from their mean positions is 2.0×10^{-6} m.

The speed of sound in air at 17 °C is 340 m s^{-1}.

(i) On Fig. 5.2, sketch the sinusoidal variation of the displacement of the air with distance between **C** and **R**.

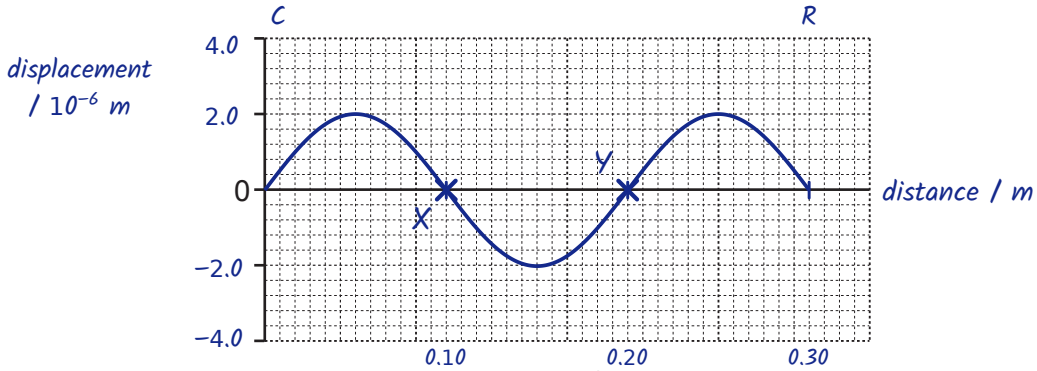

Fig. 5.2

1 Label the axes and include sensible scales.
2 On Fig. 5.2, mark one point where air particles are moving at maximum speed. Label it **X**.
3 On Fig. 5.2, mark one point where air particles are moving at maximum speed but travelling in the opposite direction to the air particles in **2**. Label it **Y**.

[4]

(ii) Calculate

1 the maximum speed v_{max} of the oscillating particles in the sound wave

$v_{max} = 2\pi fA = 2\pi \times 1.7 \times 10^3 \times 2.0 \times 10^{-6} = 2.1 \times 10^{-2}$ m s^{-1}

v_{max} = ... 2.1×10^{-2} ..... m s^{-1} **[2]**

2 the root mean square speed $c_{r.m.s.}$ of the air molecules in the room.
The molar mass of air is 2.9×10^{-2} kg mol^{-1}.

$\frac{1}{2}mc^2 = 3/2\ kT$, so $c_{r.m.s.} = \sqrt{(3RT/M)}$, $T = 17 + 273 = 290$ K

$c_{r.m.s.} = \sqrt{(3 \times 8.31 \times 290 \div 0.029)} = 5.0 \times 10^2$ m s^{-1}

$c_{r.m.s.}$ = ... 5.0×10^2 ..... m s^{-1} **[2]**

© OCR 2017

(b)* Students are given the equipment in Fig. 5.1 together with a metre rule. They are also given a second loudspeaker connected to the same signal generator at 1.7 kHz. They are asked to design an experiment where they would need to take just **one** measurement and be able to determine the value of the speed of sound.

They set up the experiment in two different ways as shown in Fig. 5.3(a) and (b).

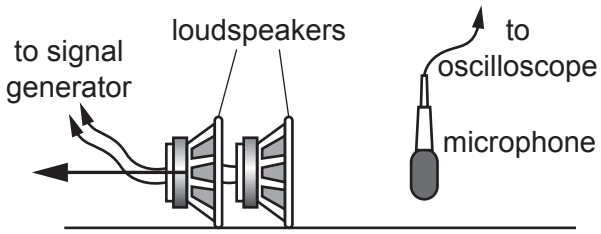

Fig. 5.3(a)

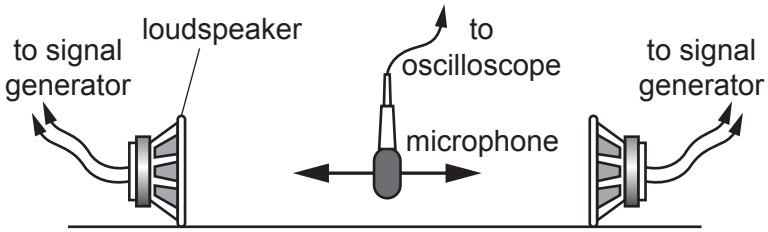

Fig. 5.3(b)

In method **(a)** the microphone is fixed and one loudspeaker is moved to the left as shown in Fig. 5.3(a).
In method **(b)** the microphone is moved to the left or to the right with the loudspeakers fixed a certain distance apart as shown in Fig. 5.3(b).

Describe and explain how both methods can be used to accurately determine the speed of sound. In your description, discuss how the uncertainty in the value for the speed of sound can be minimised in one of the methods, without using any other apparatus. **[6]**

Method (a): the two loudspeakers are connected to the same signal generator, so they emit coherent sound waves (same frequency, constant phase difference). The waves superpose (interfere) at the microphone.
Start with the loudspeakers side by side, where the waves arrive in phase and the oscilloscope shows a maximum signal. Move one loudspeaker slowly to the left: the path difference increases, the signal falls to a minimum (path difference λ/2, destructive interference) and returns to the next maximum when the path difference is one wavelength λ.
So the distance the loudspeaker moves between adjacent maxima equals λ.
Measure it with the metre rule and use $v = f\lambda$ with $f = 1.7$ kHz.
Method (b): the loudspeakers face each other, so waves travel in opposite directions and superpose to form a stationary (standing) wave between

© OCR 2017

stemup.co.uk

them. Moving the microphone along the line, the signal on the oscilloscope is a minimum at nodes and a maximum at antinodes.

The distance between adjacent nodes is $\lambda/2$, so $\lambda = 2 \times$ node spacing, then $v = f\lambda$.

Expected values: $\lambda = 340/1700 = 0.20$ m, so in (a) the speaker moves 0.20 m between maxima and in (b) the nodes are 0.10 m apart.

Minimising uncertainty (method (b)): measure across many nodes, e.g. the distance across n node spacings, and divide by n. The absolute uncertainty in the metre rule reading (about ±1 mm at each end) stays the same, so the percentage uncertainty in λ is reduced by a factor of n.

Locate minimum to minimum rather than maximum to maximum, because minima are much sharper; increase the sensitivity of the oscilloscope (or loudness of the speaker) to get a better fix on each minimum position.

A lower signal generator frequency gives a longer λ, so the percentage uncertainty in the length measured is smaller. Doing the experiment outside reduces reflections from the walls of the room, giving sharper minima.

Then $v = f\lambda = 1700 \times \lambda$, with the percentage uncertainty in v equal to that in λ (f is known precisely).

© OCR 2017

BLANK PAGE

Question 6 begins on page 18.

© OCR 2017

stemup.co.uk

6 This question is about the motion of a ball suspended by an elastic string above a bench. The mass of the string is negligible compared to that of the ball. Ignore air resistance.

Fig. 6.1

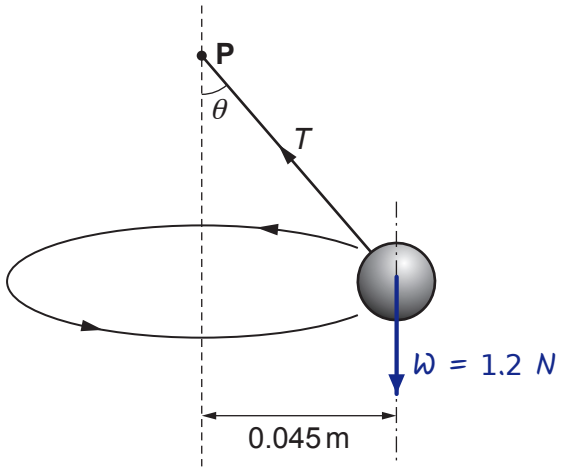

Fig. 6.2 (not to scale)

In Fig. 6.1 the ball of weight 1.2 N hangs vertically at rest from a point **P**. The extension of the string is 0.050 m. The string obeys Hooke's law.

In Fig. 6.2 the ball is moving in a horizontal circle of radius 0.045 m around a vertical axis through **P** with a period of 0.67 s. The string is at an angle θ to the vertical. The tension in the string is T.

(a) On Fig. 6.2 draw and label one other force acting on the ball. **[1]**

(b) **(i)** Resolve the tension T horizontally and vertically and show that the angle θ is 22°.

horizontally: $T \sin\theta = mr\omega^2$; vertically: $T \cos\theta = mg = W$

$m = 1.2 \div 9.81 = 0.122$ kg, $\omega = 2\pi \div 0.67 = 9.38$ rad s^{-1}

$mr\omega^2 = 0.122 \times 0.045 \times 9.38^2 = 0.48$ N

$\tan\theta = r\omega^2/g = 0.48 \div 1.2 = 0.40$, so $\theta = \tan^{-1} 0.40 = 22°$

[2]

(ii) Calculate the extension x of the string shown in Fig. 6.2.

$k = F/x = 1.2 \div 0.050 = 24$ N m^{-1}

$T = mg/\cos\theta = 1.2 \div \cos 22° = 1.29$ N

$x = T/k = 1.29 \div 24 = 0.054$ m

x = ...0.054..... m **[3]**

© OCR 2017

(c) Whilst rotating in the horizontal plane the ball suddenly becomes detached from the string. The bottom of the ball is 0.18 m above the bench at this instant. The ball falls as a projectile towards the bench beneath. Fig. 6.3 shows the view from above.

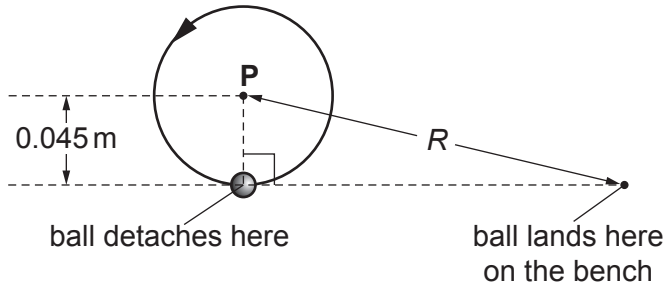

Fig. 6.3

Calculate the horizontal distance *R* from the point on the bench vertically below the point **P** to the point where the ball lands on the bench.

vertical: $y = \frac{1}{2}gt^2$, $0.18 = 0.5 \times 9.81 \times t^2$, so $t = 0.19$ s

speed of ball: $v = r\omega = 0.045 \times 9.38 = 0.42$ m s^{-1}, along the tangent

horizontal distance travelled $= vt = 0.42 \times 0.19 = 0.080$ m

this is perpendicular to the radius, so by Pythagoras:

$R = \sqrt{(0.045^2 + 0.080^2)} = \sqrt{(0.0020 + 0.0064)} = 0.092$ m

R = ...0.092..... m **[4]**

(d) Returning to the situation shown in Fig. 6.2, state and explain what happens when the rate of rotation of the ball is increased.

The tension T increases, the string stretches more and the angle θ increases, because a larger centripetal force ($mr\omega^2$) is needed at the greater ω, provided by T sin θ.

..... **[2]**

END OF QUESTION PAPER

© OCR 2017

ADDITIONAL ANSWER SPACE

If additional space is required, you should use the following lined page(s). The question number(s) must be clearly shown in the margin(s).

OCR
Oxford Cambridge and RSA

Copyright Information

OCR is committed to seeking permission to reproduce all third-party content that it uses in its assessment materials. OCR has attempted to identify and contact all copyright holders whose work is used in this paper. To avoid the issue of disclosure of answer-related information to candidates, all copyright acknowledgements are reproduced in the OCR Copyright Acknowledgements Booklet. This is produced for each series of examinations and is freely available to download from our public website (www.ocr.org.uk) after the live examination series.

If OCR has unwittingly failed to correctly acknowledge or clear any third-party content in this assessment material, OCR will be happy to correct its mistake at the earliest possible opportunity.

For queries or further information please contact the Copyright Team, First Floor, 9 Hills Road, Cambridge CB2 1GE.

OCR is part of the Cambridge Assessment Group; Cambridge Assessment is the brand name of University of Cambridge Local Examinations Syndicate (UCLES), which is itself a department of the University of Cambridge.

© OCR 2017