OCR A-LEVEL PHYSICS A · H556

PHYSICS

EXAM QUESTION PACK

6.3 ELECTROMAGNETISM

SCORE	PERCENTAGE
/142	%

STEMUP

These questions belong to OCR, not to us.

The examination questions, mark schemes and examiner comments in this pack were written and published by OCR. They are past assessment materials, reproduced here so that students can revise from them.

What we do not own

STEMUP is not affiliated with OCR and does not own, and makes no claim to own, any of the question, mark scheme or examiner report material in this pack. OCR has not endorsed, approved or been involved in the production of it. OCR and the qualification titles used here belong to their respective owners and appear for identification only.

Where to find the originals

OCR publishes its past papers, mark schemes and examiner reports free of charge. Always check the current specification at ocr.org.uk before you revise, because content and wording can change between series.

If you hold the rights to any material in this pack and would like it amended or removed, contact admin@stemup.co.uk and we will act on it.

1 Fig. 2.1 shows the circular path described by a helium nucleus in a region of uniform magnetic field in a vacuum.

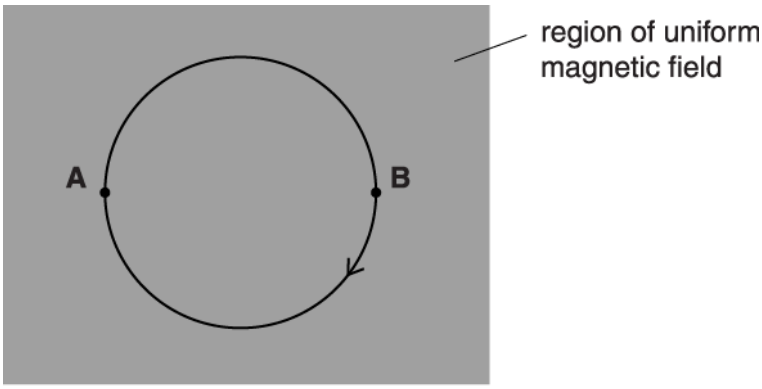

Fig. 2.1

The direction of the magnetic field is perpendicular to the plane of the paper. The magnetic flux density of the magnetic field is 0.20 mT. The radius of the circular path is 15 cm. The helium nucleus has charge + 3.2×10^{-19} C and mass 6.6×10^{-27} kg.

A uniform electric field is applied in the region shaded in Fig. 2.1. The direction of this electric field is from **left** to **right**. Describe the path now followed by the helium nucleus in the electric and magnetic fields.

---

[2]

STEMUP.CO.UK

2(a) State Faraday's law of electromagnetic induction.

---

[1]

(b) Fig. 5.2 shows the magnetic field from the north pole of a vertically held bar magnet.

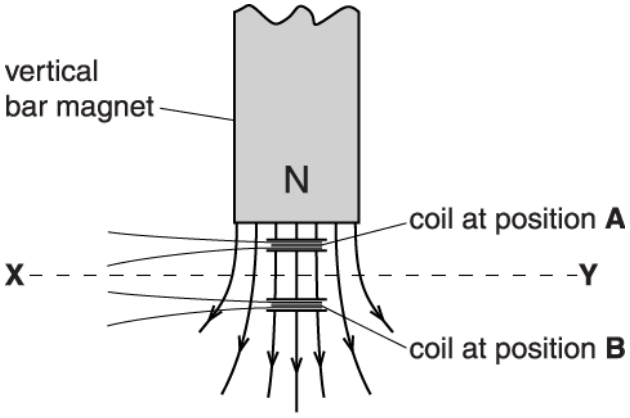

Fig. 5.2

(i) A small flat coil is placed at **A**. The coil is moved downwards from position **A** to position **B**. The plane of the coil remains horizontal between these two positions. Explain why there is no induced e.m.f. across the ends of the coil.

---

[1]

(ii) Fig. 5.3 is a graph showing how the magnetic flux density *B* varies along the horizontal line **XY** in Fig. 5.2.

STEMUP.CO.UK

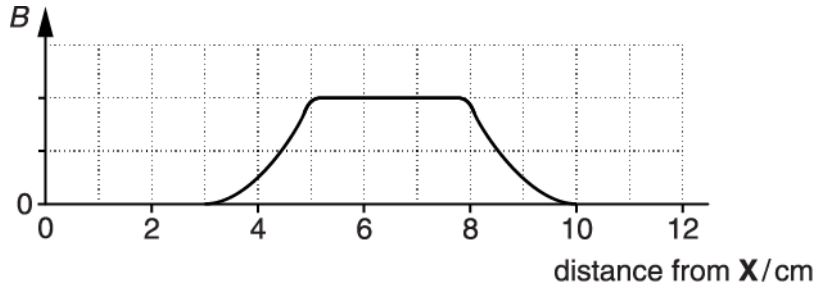

Fig. 5.3

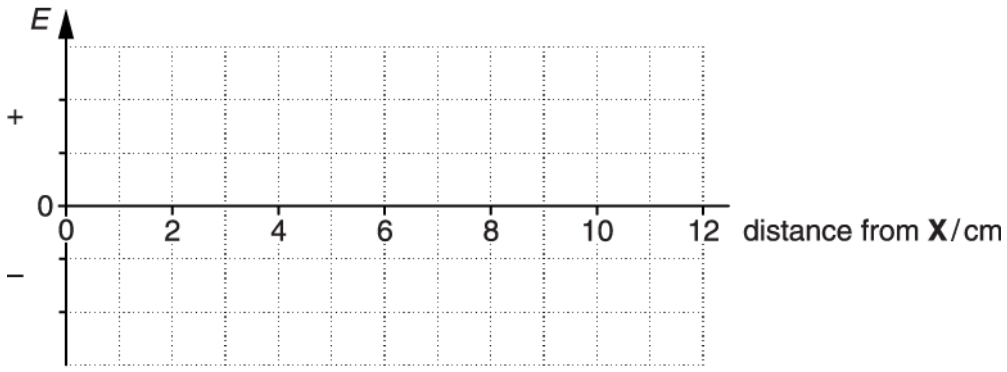

Fig. 5.4

The same small flat coil from **(i)** is moved at a constant speed from X to Y. The plane of the coil remains horizontal between X and Y.

On the axis provided in Fig. 5.4, sketch a graph to show the variation of the induced e.m.f. *E* across the ends of the coil with distance from X.

[3]

STEMUP.CO.UK

3(a) Fig. 2.1 shows a horizontal current-carrying wire placed in a uniform magnetic field.

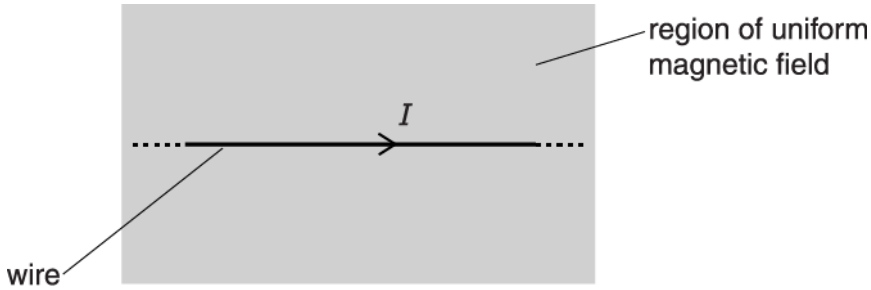

Fig. 2.1

The magnetic field of flux density 0.070 T is at right angles to the wire and into the plane of the paper. The weight of a 1.0 cm length of the wire is 6.8×10^{-5} N. The current *I* in the wire is such that the vertical upward force on the wire due to the magnetic field is equal to the weight of the wire.

(i) Calculate the current *I* in the wire.

I = _____ A **[2]**

(ii) Suggest why it would be impossible for overhead cables carrying an alternating current to float in the Earth's magnetic field.

_____

_____ **[1]**

STEMUP.CO.UK

(b) A charged particle enters a region of uniform magnetic field. Fig. 2.2 shows the path of this particle.

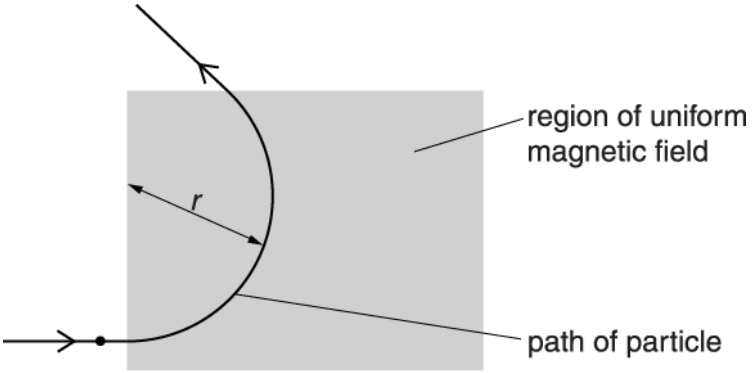

Fig. 2.2

The direction of the field is perpendicular to the plane of the paper. The magnetic field has flux density *B*. The particle has mass *m*, charge *Q* and speed *v*. The particle travels in a circular arc of radius *r* in the magnetic field.

(i) Derive an equation for the radius *r* in terms of *B*, *m*, *Q* and *v*.

[2]

(ii) A thin aluminium plate is now placed in the magnetic field. Fig. 2.3 shows the path of an unknown charged particle.

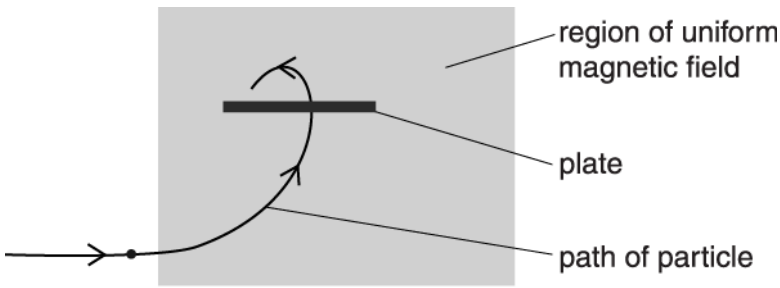

Fig. 2.3

STEMUP.CO.UK

The particle loses some of its kinetic energy as it travels through the plate. The initial radius of the path of the particle before it enters the plate is 4.8 cm. After leaving the plate the final radius of the path of the particle is 1.2 cm.

Calculate the ratio

$$\frac{\text{initial kinetic energy of particle}}{\text{final kinetic energy of particle}}.$$

ratio = _____ **[2]**

STEMUP.CO.UK

4 A coil with three turns of wire is used in an experiment.

The graph shows the variation of magnetic flux linkage with time t for this coil.

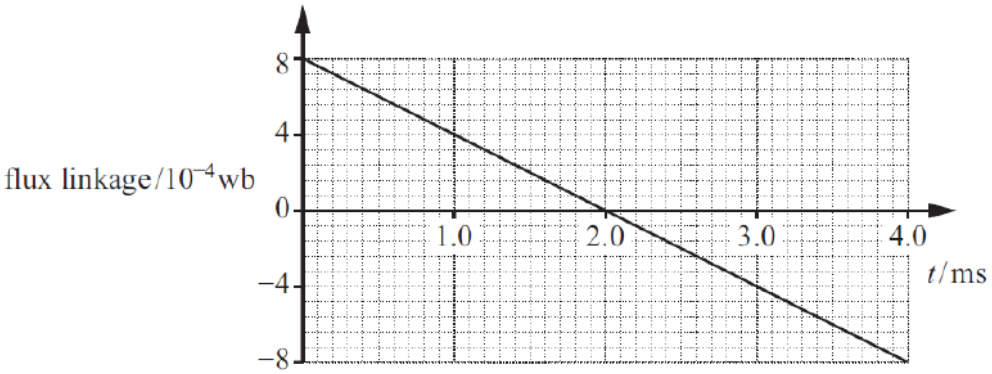

What is the e.m.f. induced across the ends of the coil?

A 0 V
B 0.20 V
C 0.40 V
D 1.2 V

Your answer ☐

[1]

STEMUP.CO.UK

5 A rigid loop of insulated wire is placed in a uniform magnetic field of flux density 80 mT. The current in this loop is 0.50 A and the angle between the wire and the direction of the magnetic field is 30°.

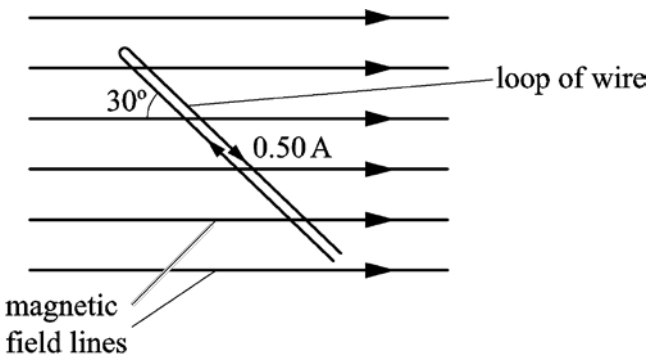

What is the magnitude of the force experienced by a 1.0 cm section of the loop?

A 0 N
B 2.0×10^{-4} N
C 3.5×10^{-4} N
D 4.0×10^{-4} N

Your answer

[1]

STEMUP.CO.UK

6(a) **Fig. 22.1** shows the circular track of a positron moving in a uniform magnetic field.

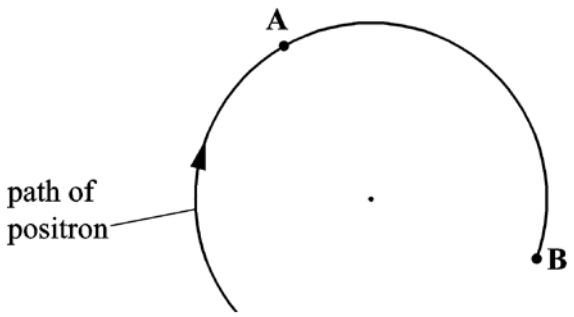

Fig. 22.1

The magnetic field is perpendicular to the plane of **Fig. 22.1**.
The speed of the positron is $5.0 \times 10^7\ \mathrm{m\ s^{-1}}$ and the radius of the track is 0.018 m.

State the direction of the force acting on the positron when at point **A** and explain why this force does **not** change the speed of the positron.

---**[2]**

(b) Calculate the magnitude of the magnetic flux density of the magnetic field.

magnetic flux density = _____ T **[3]**

STEMUP.CO.UK

7 The diagram below shows a transformer.

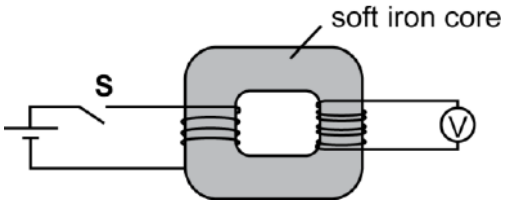

The primary coil is connected to a switch **S** and a cell. The secondary coil is connected to a voltmeter. The switch is then **closed**.

Which statement is correct?

The voltmeter reading….

A does not change.
B increases and then stays constant.
C increases and then decreases to zero.
D increases and then changes direction.

Your answer ☐

[1]

8 A charged particle travelling with speed v describes a circular path of radius R in a plane perpendicular to a uniform magnetic field. The orbital period of this particle is T.
The same particle now travels with speed $2v$ in a circular path in the same plane as before.

What is the orbital period of the particle now?

A $0.25T$
B $0.5T$
C T
D $2T$

Your answer ☐

[1]

STEMUP.CO.UK

9 A positively charged particle is travelling in a uniform field.

Fig. 21.1 shows the particle travelling at right angles to the direction of the field.

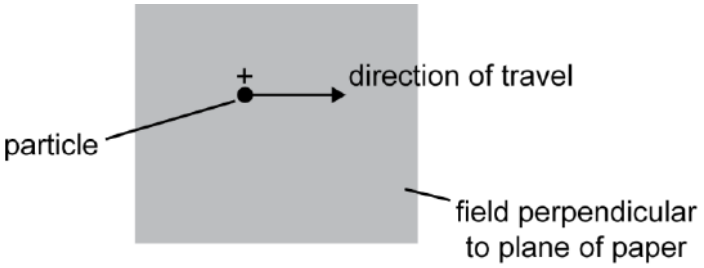

Fig. 21.1

Describe the motion of the particle in terms of the force it experiences when the field is

(i) a magnetic field

---[2]

(ii) an electric field.

---[2]

STEMUP.CO.UK

10(a) * **Fig. 5.1** shows a simple a.c. generator being tested by electrical engineers.

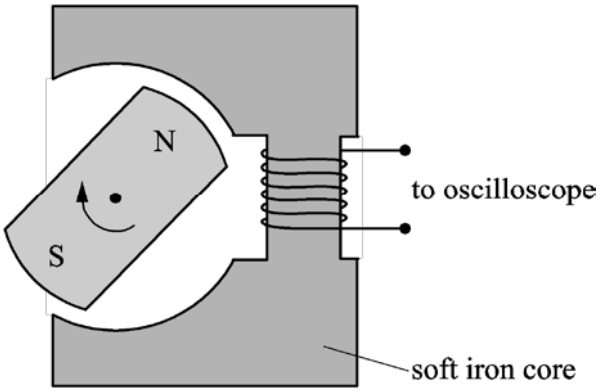

Fig. 5.1

It consists of a magnet, on the shaft of a **variable speed** motor, being rotated inside a cavity in a soft iron core. The output from the coil, wound on the iron core, is connected to an oscilloscope. The grid of **Fig. 5.2** shows a typical output voltage which would be displayed on the oscilloscope screen.

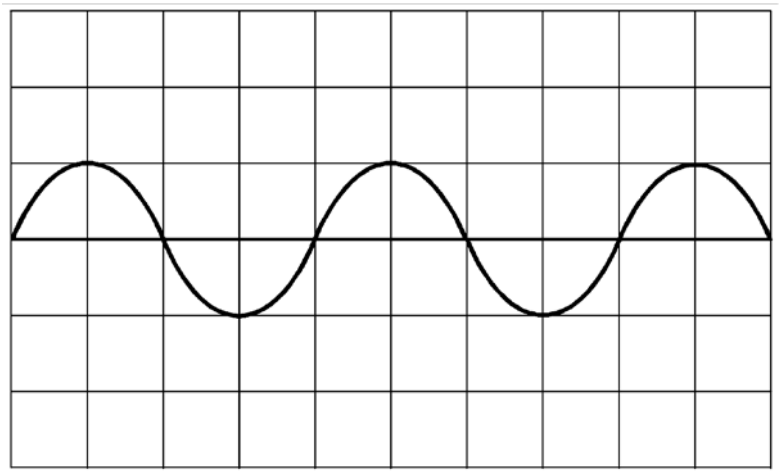

Fig. 5.2

According to Faraday's law the e.m.f. induced is directly proportional to the rate of change of flux linkage. In the context of this experiment, the maximum e.m.f. induced is directly proportional to the frequency of rotation of the magnet.

Use the apparatus above to plan an experiment to validate Faraday's law of electromagnetic induction. In your description include how the data is collected and analysed.

STEMUP.CO.UK

[6]

STEMUP.CO.UK

(b) **Fig. 5.3** shows the poles of a powerful electromagnet producing a uniform field in the gap between them. The dimension of each pole is 0.10 m by 0.080 m. There is no field outside the gap. A circular coil of 80 turns is placed so that it encloses the total flux of the magnetic field.

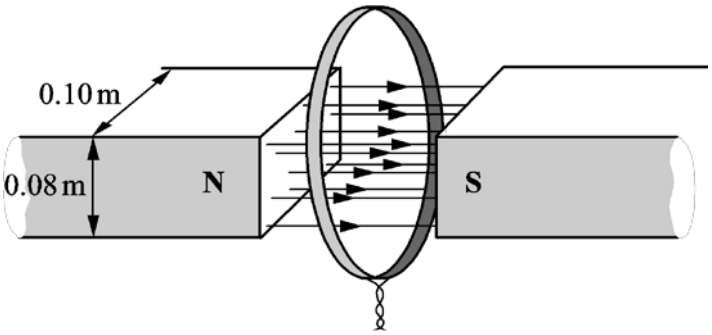

Fig. 5.3

(i) The current in the electromagnet is reduced so that the field falls linearly from 0.20 T to zero in 5.0 s.

Calculate the initial flux in the gap and hence the e.m.f. generated in the coil during this time.

induced e.m.f. = _____ V **[2]**

(ii) The coil is part of a circuit of total resistance *R* so that a current is generated in the circuit while the field is collapsing.

Draw on the coil in **Fig. 5.3** the direction of this induced current.

State how you applied the laws of electromagnetic induction to deduce the direction of this current.

_____

_____

_____ **[2]**

© OCR 2022. You may photocopy this page.

Created in ExamBuilder

STEMUP.CO.UK

11(a) Fig. 5.1 shows a horizontal copper wire placed between the opposite poles of a permanent magnet. The wire is held in tension *T* by the clamps at each end. The length of the wire in the magnetic field of flux density 0.032 tesla is 6.0 cm.

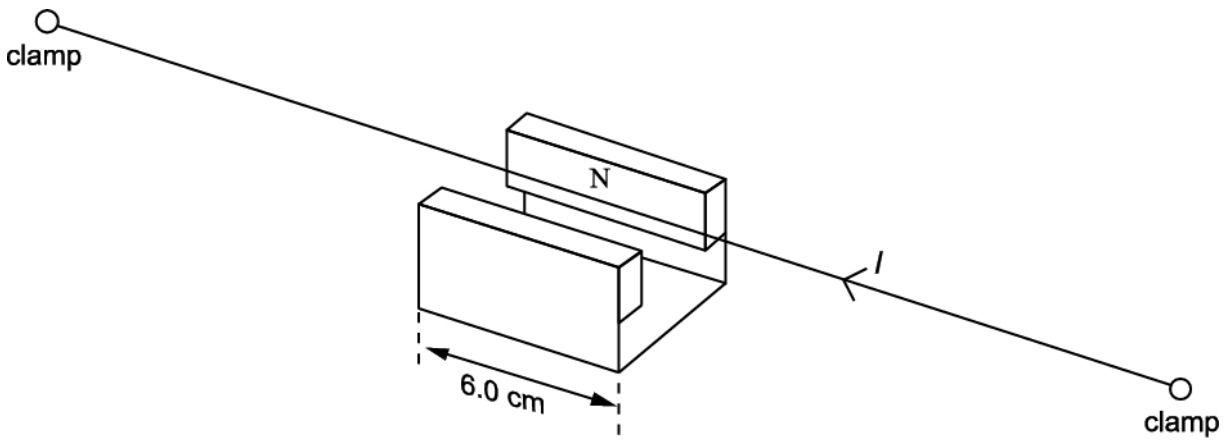

Fig. 5.1

A direct current *I* of 2.5 A is passed through the wire as shown.

(i) On Fig. 5.1 draw an arrow to indicate the direction of the force *F* on the wire.

[1]

(ii) Calculate the magnitude of *F.*

F = _____ N **[1]**

(b) The direct current is changed to an alternating current of constant amplitude and variable frequency, causing the wire to oscillate. The frequency of the current is increased until the fundamental natural frequency of the wire is found as shown in Fig. 5.2. This is 70 Hz.

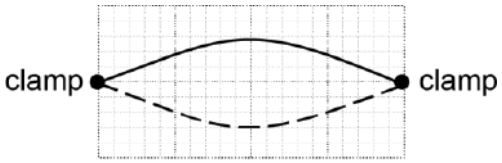

Fig. 5.2

STEMUP.CO.UK

(i) In the situation shown in Fig. 5.2 the amplitude of the oscillation of the centre point of the wire is 4.0 mm. Calculate the maximum acceleration of the wire at this point.

maximum acceleration = _____ m s^{-2} **[2]**

(ii) The frequency is increased until another stationary wave pattern occurs. The amplitude of this stationary wave is much smaller.

1 Sketch this pattern on Fig. 5.3 and state the frequency

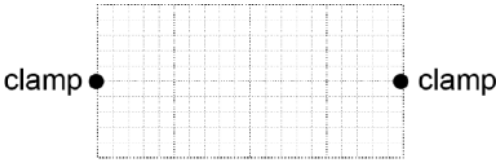

Fig. 5.3

frequency = _____ Hz **[1]**

2 Explain why the amplitude is so small. Suggest how the experiment can be modified to increase the amplitude.

_____

_____

_____

_____

_____ **[3]**

STEMUP.CO.UK

(c)

The speed v of a transverse wave along the wire is given by $v = \sqrt{\frac{T}{\mu}}$ where T is the tension and μ is the mass per unit length of the wire.

(i) Assume that both the length and mass per unit length remain constant when the tension in the wire is halved. Calculate the frequency of the new fundamental mode of vibration of the wire.

frequency = _____ Hz **[1]**

(ii) In practice the mass per unit length changes because the wire contracts when the tension is reduced. For the situation in which the tension is halved the strain reduction is found to be 0.4%.

1 Calculate the percentage change in μ. State both the size and sign of the change.

percentage change in μ = _____ % **[1]**

2 Write down the percentage error this causes in your answer to **(i)**. State, giving your reasoning, whether the actual frequency would be higher or lower than your value.

_____

_____

_____ **[2]**

STEMUP.CO.UK

12(a) * A student is to investigate the magnetic field inside and around a solenoid.

It is suggested that the magnetic field strength *B* inside a long solenoid is determined by various quantities,

namely $B \propto \frac{NI}{L}$

where *N* is the number of turns, *L* is the length of the solenoid and *I* is the current in the wire.

Apparatus is set up for an experiment as shown in Figure 6.1.

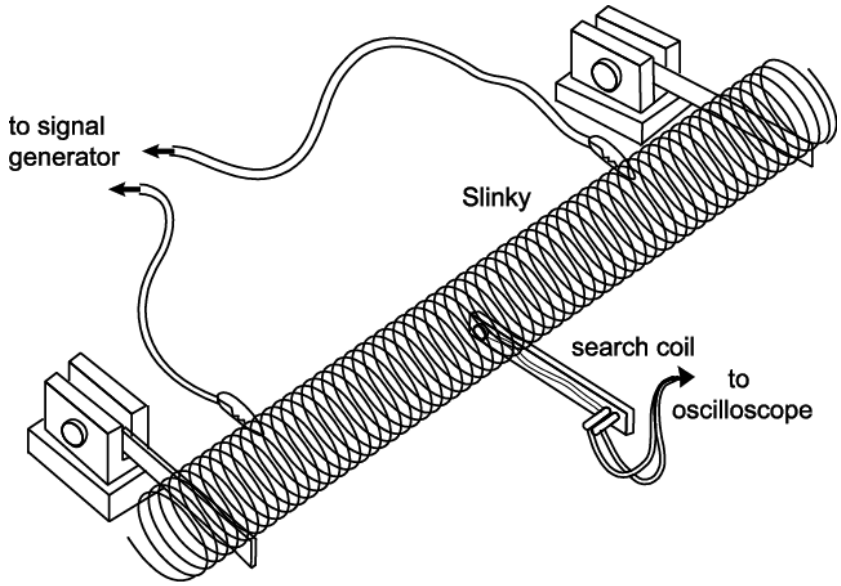

Fig. 6.1

A Slinky is a long spring about 70 mm in diameter which can be stretched easily and uniformly. The search coil has 5000 turns and the signal generator can produce a constant alternating current at a frequency between 0 and 1 kHz.

Plan an experiment using this equipment to investigate the validity of the relationship between *B,* at the centre of the solenoid, and **one** of the variables *N* or *L*. Explain how you will make your measurements, how sensitive they will be and the steps that you will take to make this a valid test.

STEMUP.CO.UK

[6]

STEMUP.CO.UK

(b) Fig. 6.2 shows a soft iron ring of variable circular cross-section. It has four coils containing 2, 3, 4 and 5 turns wound around it. The cross-sectional area of the ring is different for each coil.

A cell is connected across the coil with three turns.

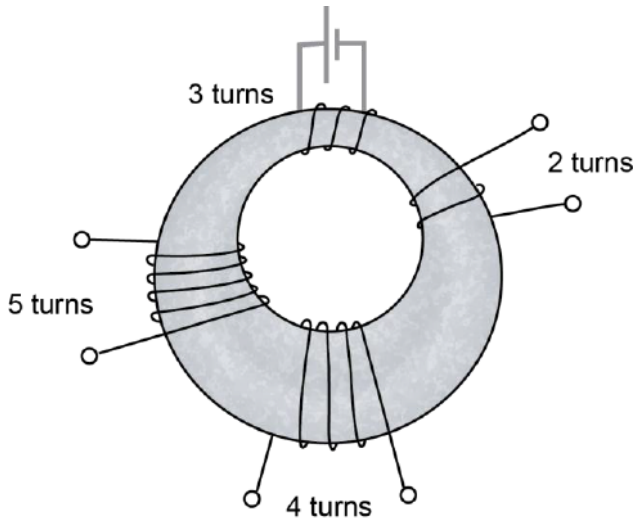

Fig. 6.2

(i) Draw on Fig. 6.2 the complete paths of **two** lines of magnetic flux produced by the three-turn coil when there is a current in it.

[1]

(ii) State which **one** of the following three quantities,

magnetic flux *magnetic flux density* *magnetic flux linkage*

is most nearly the same for all four coils in Fig. 6.2. Give a reason for your answer.

---**[1]**

(iii) Write down **one** of the **other** two quantities in **(ii)** above. State in which coil this quantity has the largest value. Give a reason for your answer.

---**[2]**

STEMUP.CO.UK

13(a) The unit of magnetic flux density is the tesla, T.

Express this unit in terms of kg, C and s.

T = _____ [2]

(b) Fig. 1.1 shows the circular path travelled by electrons in a region of uniform magnetic field in a vacuum.

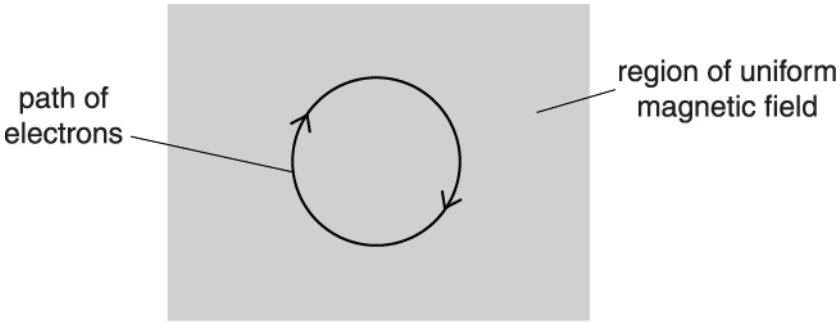

Fig. 1.1

The direction of the magnetic field is perpendicular to the plane of the paper. The electrons have a speed of 7.0×10^6 m s^{-1} and travel in a circular path of diameter 5.0 cm.

(i) Calculate the magnetic flux density *B*.

B = _____ . T [3]

(ii) Calculate the period *T* of the electrons in their circular orbit.

STEMUP.CO.UK

T = _____ s **[1]**

(iii) The speed of the electrons is doubled. The period stays the same. Explain why.

_____

_____

_____

_____ **[2]**

STEMUP.CO.UK

14 This question is about electric fields.

Fig. 2.1 shows the electric field pattern drawn by a student for two oppositely charged plates.

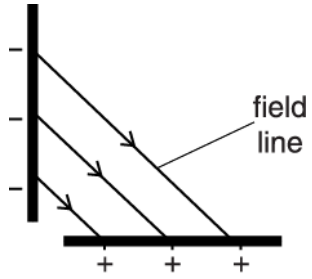

Fig. 2.1

State **two** errors made by the student in this drawing of the field pattern.

---[2]

STEMUP.CO.UK

15(a) The question is about electromagnetic induction.

(i) Define *magnetic flux linkage*.

---

[1]

(ii) A thin insulated wire has length L. The wire is used to make a flat coil of mean radius r.
A uniform magnetic field of flux density B is applied normal to the plane of the coil.

1 The number of turns N of the coil can be determined using L and the circumference of the coil.
Write an equation for N in terms of L and r.

[1]

2 Hence show that the magnetic flux linkage for this coil is given by the equation $\frac{BrL}{2}$.

[1]

STEMUP.CO.UK

(b)

(i) State *Faraday's law of electromagnetic induction*.

---[1]

(ii) A coil rotates in a uniform magnetic field. Fig. 3.1 shows the variation of magnetic flux linkage with time *t*.

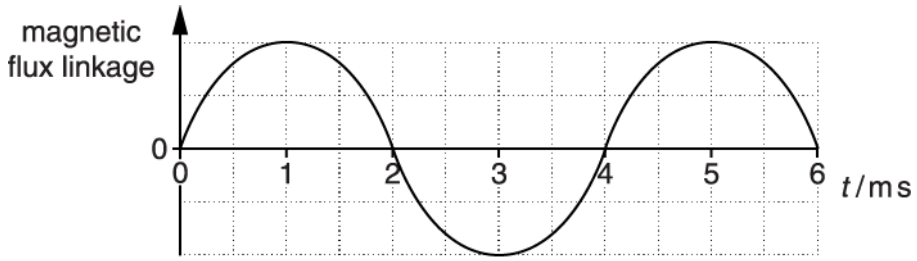

Fig. 3.1

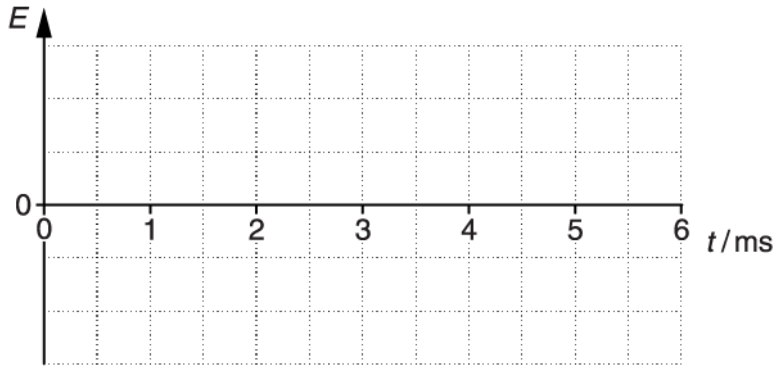

Fig. 3.2

On Fig. 3.2 sketch a graph to show the variation of the induced e.m.f. *E* across the ends of the coil with time *t*.

[2]

STEMUP.CO.UK

(c) Fig. 3.3 shows a diagram of a simple transformer.

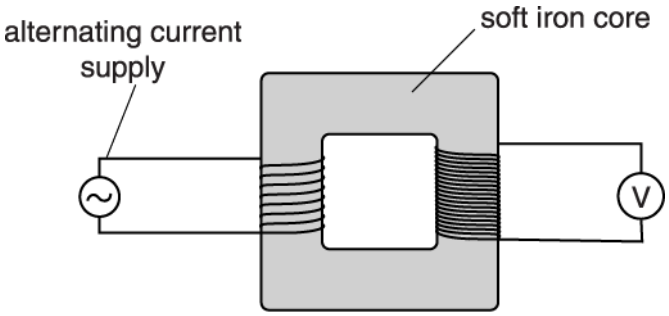

Fig. 3.3

Explain how an electromotive force (e.m.f.) is induced across the ends of the secondary coil.

---

[2]

16 A current-carrying solenoid has N turns and radius r. The magnetic flux density within the core of the solenoid is B.

What is the magnetic flux linkage for this solenoid?

A NB
B $\pi r^2 B$
C $2\pi rBN$
D $\pi r^2 BN$

Your answer ☐

[1]

STEMUP.CO.UK

17 The diagram below shows a current-carrying wire coming out from the plane of the paper. The current in the wire produces a magnetic field in an **anticlockwise** direction around the wire.

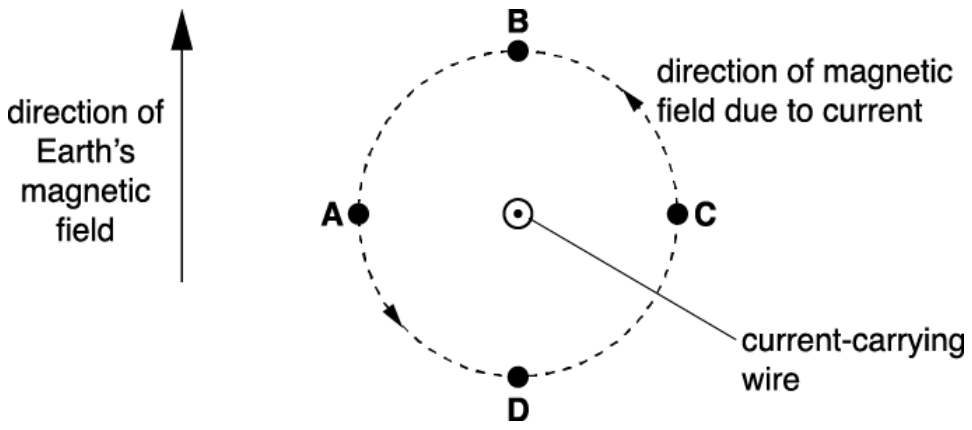

The direction of the Earth's magnetic field is also shown.
The Earth's magnetic field interacts with the magnetic field of the current-carrying wire.

At which point **A**, **B**, **C** or **D** is the resultant magnetic field strength a **minimum**?

Your answer ☐

[1]

18 An electron moves in a circle of radius 2.0 cm in a uniform magnetic field of flux density 170 mT.

What is the momentum of this electron?

A 3.4×10^{-3} kg m s^{-1}

B 5.4×10^{-17} kg m s^{-1}

C 1.4×10^{-18} kg m s^{-1}

D 5.4×10^{-22} kg m s^{-1}

Your answer ☐ **[1]**

STEMUP.CO.UK

19 A beam of charged particles is not deflected when it passes through a region where both electric and magnetic fields are present.

Which statement is **not** correct?

A All the particles have the same speed.

B The resultant force on each particle is zero.

C The magnetic force is equal to the electric force on each particle.

D The magnetic field and the electric field are in the same direction.

Your answer ☐ **[1]**

STEMUP.CO.UK

20(a)

A student conducts an experiment to confirm that the uniform magnetic flux density *B* between the poles of a magnet is 30 mT.

A current-carrying wire of length 5.0 cm is placed perpendicular to the magnetic field.

The current *I* in the wire is changed and the force *F* experienced by the wire is measured. Fig. 22.1 shows the graph plotted by the student.

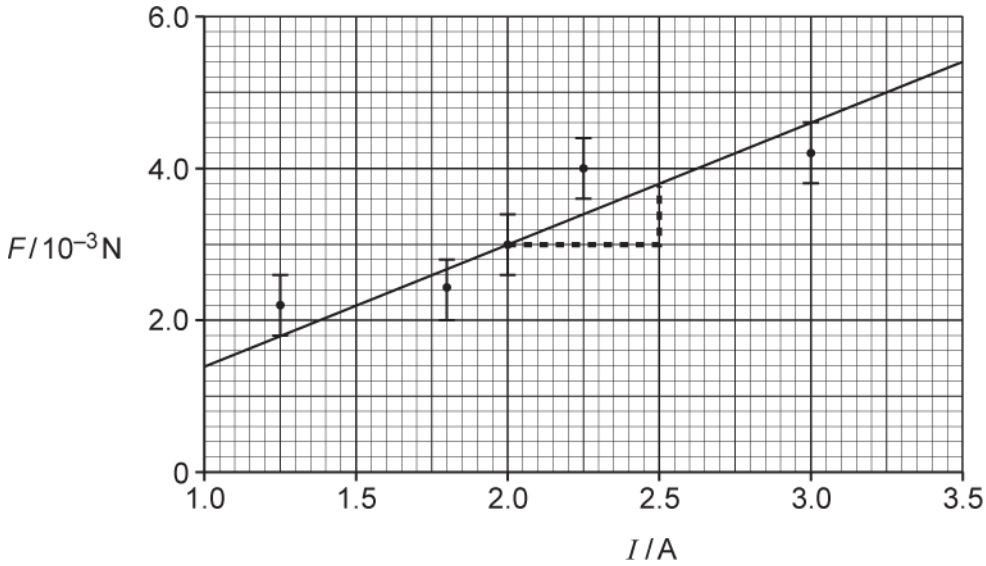

Fig. 22.1

The student's analysis is shown on the graph of Fig. 22.1 and in the space below.

$F = BIL$

$$\text{gradient} = BL = \frac{(3.8 - 3.0) \times 10^{-3}}{2.5 - 2.0} = 0.0016$$

$$B = \frac{0.0016}{0.05} = 0.032\,\text{T} = 32\,\text{mT}$$

This is just 2 mT out from the 30 mT value given by the manufacturer, so the experiment is very accurate.

Evaluate the information from Fig. 22.1 and the analysis of the data from the experiment. No further calculations are necessary.

STEMUP.CO.UK

[6]

(b) Fig. 22.2 shows a transformer circuit.

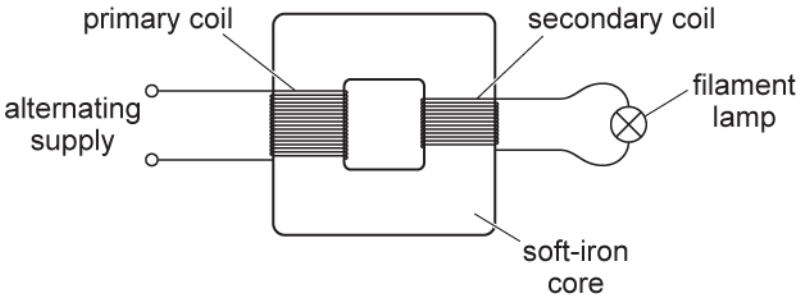

Fig. 22.2

The primary coil is connected to an alternating voltage supply. A filament lamp is connected to the output of the secondary coil.

(i) Use Faraday's law of electromagnetic induction to explain why the filament lamp is lit.

STEMUP.CO.UK

---[3]

(ii) The primary coil has 400 turns and the secondary coil has 20 turns. The potential difference across the lamp is 12 V and it dissipates 24 W. The transformer is 100% efficient.

1 Calculate the current in the primary coil.

current = _____ A [2]

2 The alternating voltage supply is replaced by a battery and an open switch in series. The switch is closed. The lamp is lit for a short period of time and then remains off. Explain this observation.

---[2]

STEMUP.CO.UK

21(a) A small thin rectangular slice of semiconducting material has width *a* and thickness *b* and carries a current *I*. The current is due to the movement of electrons. Each electron has charge –*e* and mean drift velocity *v*.
A uniform magnetic field of flux density *B* is perpendicular to the direction of the current and the top face of the slice as shown in Fig. 2.1.

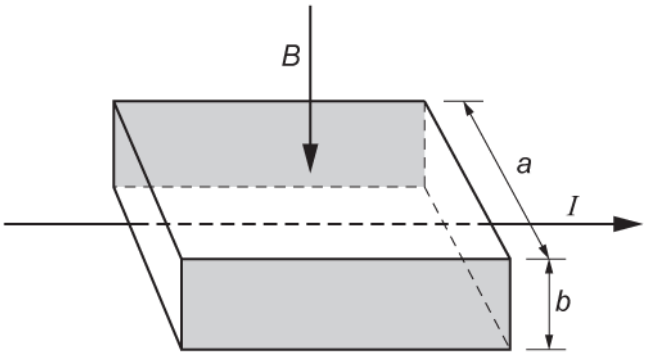

Fig. 2.1

As soon as the current is switched on, the moving electrons in the current are forced towards the shaded rear face of the slice where they are stored. This causes the shaded faces to act like charged parallel plates. Each electron in the current now experiences both electric and magnetic forces. The resultant force on each electron is now zero.

Write the expressions for the electric and magnetic forces acting on each electron and use these to show that the magnitude of the potential difference *V* between the shaded faces is given by

$$V = Bva.$$

[3]

STEMUP.CO.UK

(b) Here are some data for the slice in a particular experiment.

number of conducting electrons per cubic metre, $n = 1.2 \times 10^{23}\ \text{m}^{-3}$

$a = 5.0$ mm

$b = 0.20$ mm

$I = 60$ mA

$B = 0.080$ T

Use this data to calculate

(i) the mean drift velocity v of electrons within the semiconductor

v = _____ m s^{-1} **[3]**

(ii) the potential difference V between the shaded faces of the slice.

V = _____ V **[1]**

STEMUP.CO.UK

(c) The slice is mounted and used as a measuring instrument called a Hall probe.
A cell is connected to provide the current in the slice. The potential difference across the slice is measured by a separate voltmeter.

A student wants to measure the magnetic flux density between the poles of two magnets mounted on a steel yoke as shown in Fig. 2.2. The magnitude of the flux density is between 0.02 T and 0.04 T.

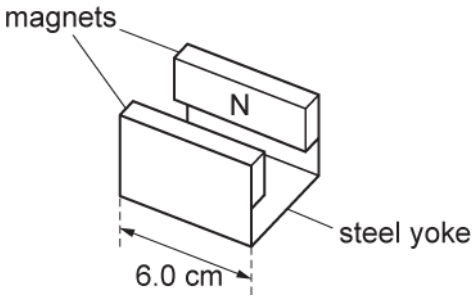

Fig. 2.2

(i) Suggest **one** reason why this Hall probe is **not** a suitable instrument to measure the magnetic flux density for the arrangement shown in Fig. 2.2.

--- [1]

(ii) Another method of measuring the magnetic flux density for the arrangement shown in Fig. 2.2 is to insert a current-carrying wire between the poles of the magnet.
Explain how the magnetic flux density can be determined using this method and discuss which measurement in the experiment leads to the greatest uncertainty in the value for the magnetic flux density.

© OCR 2022. You may photocopy this page.

Created in ExamBuilder

STEMUP.CO.UK

[4]

STEMUP.CO.UK

22(a)

A magnet rotates inside a shaped soft iron core. A coil is wrapped around the iron core as shown in Fig. 5.1. The coil is connected to an oscilloscope.

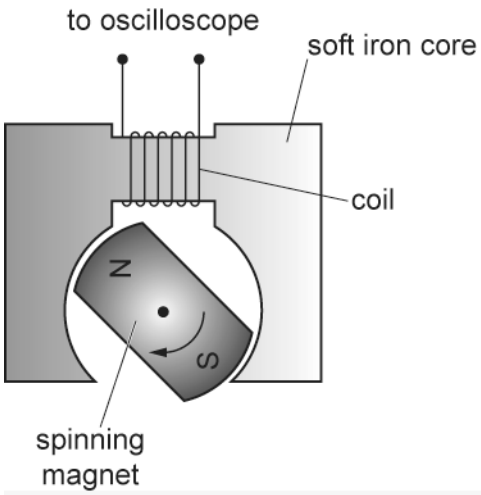

Fig. 5.1

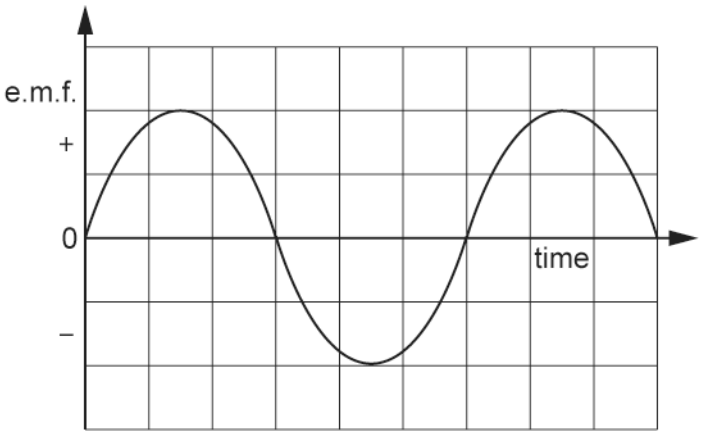

Fig. 5.2

The spinning magnet induces an e.m.f. in the coil. A graph of the e.m.f. displayed on the oscilloscope screen is shown in Fig. 5.2.

(i) Explain the shape of the graph in terms of the magnetic flux linking the coil.

---[2]

STEMUP.CO.UK

(ii) On Fig. 5.3 sketch a graph of the magnetic flux linkage of the coil against time. The variation of the induced e.m.f. across the coil is shown as a dotted line.

[1]

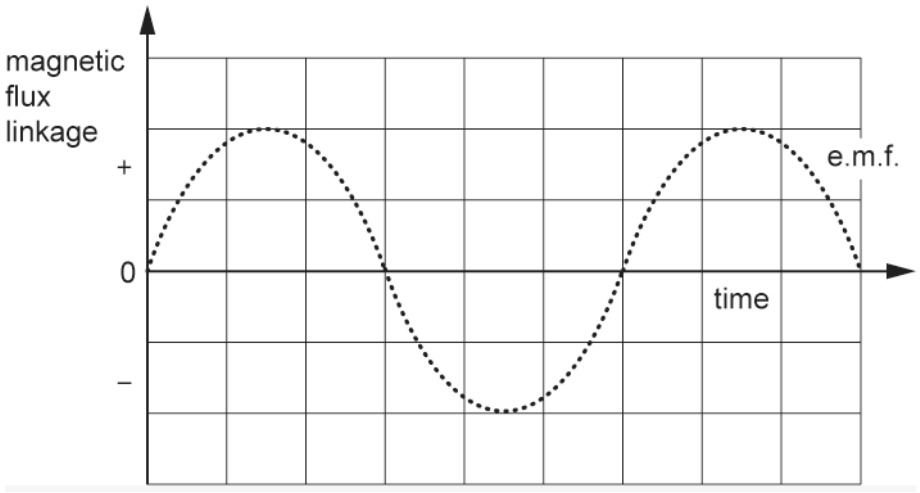

Fig. 5.3

(iii) The coil shown in Fig. 5.1 has 150 turns. The maximum induced e.m.f. V_0 across the coil is 1.2 V when the magnet is rotating at 24 revolutions per second.

Calculate the maximum **magnetic flux** through the coil using the equation

$$V_0 = 2\pi \times (\text{frequency}) \times (\text{maximum magnetic flux linkage})$$

Give a unit with your answer.

maximum flux = ---------- unit ---------- [2]

STEMUP.CO.UK

(b)

A student is given a transformer with coils **X** and **Y**, as shown in Fig. 5.4.

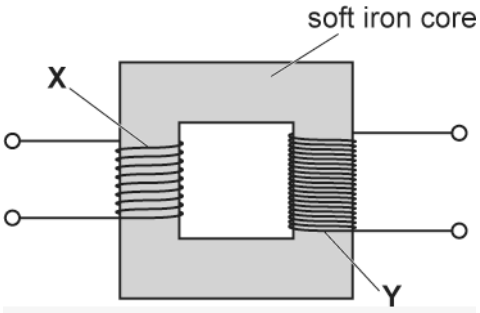

Fig. 5.4

The student is intending to investigate how the maximum induced e.m.f. V_0 in coil **Y** depends on the frequency f of the alternating current in coil **X**.

The changing magnetic flux density in coil **X** induces an e.m.f. in coil **Y**. Faraday's law indicates that the maximum induced e.m.f. V_0 should be directly proportional to f.

Describe how you would investigate the suggested relationship between V_0 and f in the laboratory using these coils. In your description include all of the equipment used and how you would analyse the data collected.

Use the space below to draw a suitable diagram.

STEMUP.CO.UK

[6]

STEMUP.CO.UK

23 A charged particle moves in a circular path of radius 1.2 cm in a uniform magnetic field.

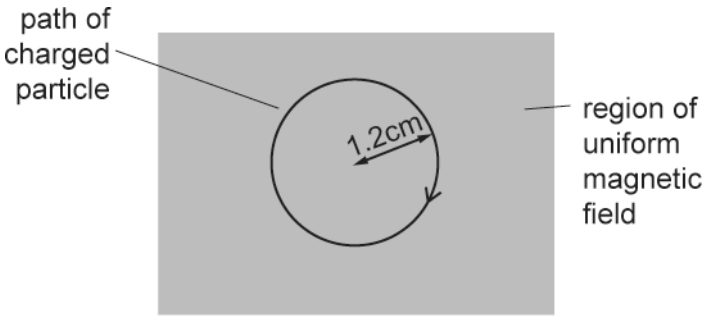

The direction of the magnetic field is perpendicular to the plane of the paper.

The particle has mass m, charge $+Q$ and speed v.

Another particle of mass $3m$, charge $+2Q$ and speed v moves in a circular path of radius R in the same magnetic field.

What is the value of R?

A 0.8 cm
B 1.2 cm
C 1.8 cm
D 7.2 cm

Your answer [1]

STEMUP.CO.UK

24(a) Fig. 21.1 shows a coil of a simple generator rotating in a uniform magnetic field.

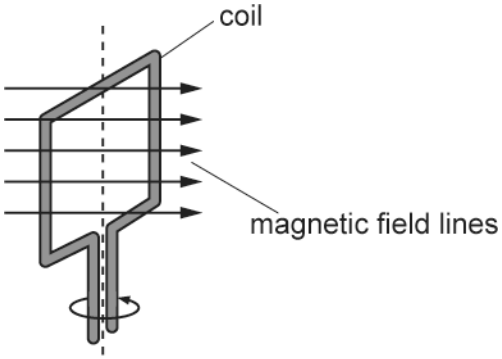

Fig. 21.1

The coil has 85 turns of insulated wire. The cross-sectional area of the coil is 14 cm^2.

Fig. 21.2 shows the variation of magnetic flux density *B* through the plane of the coil with time *t* as it rotates.

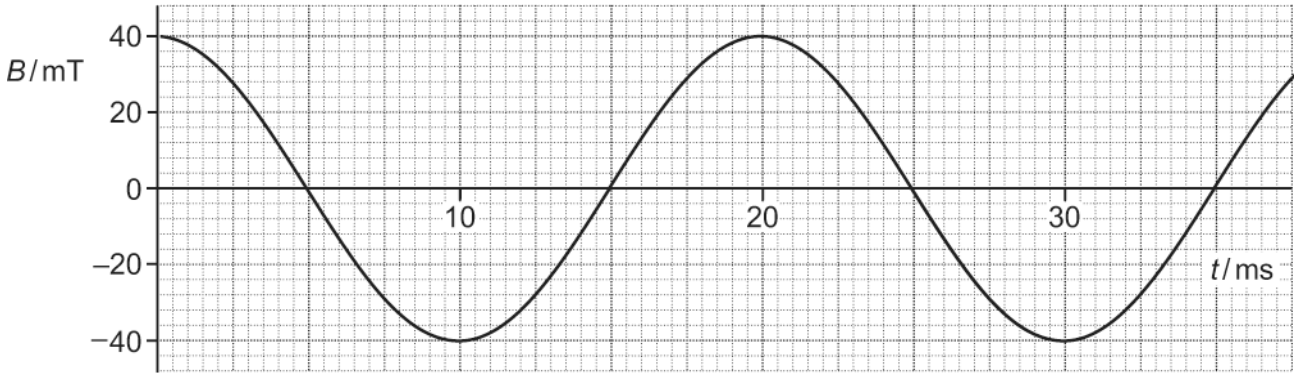

Fig. 21.2

(i) Explain why the electromotive force (e.m.f.) induced across the ends of the coil is a **maximum** at the times when $B = 0$.

---[1]

STEMUP.CO.UK

(ii) Draw a tangent to the curve in Fig. 21.2 when $B = 0$, and hence determine the **maximum** e.m.f. induced across the ends of the coil.

maximum e.m.f. = ---------- V **[3]**

STEMUP.CO.UK

(b) Fig. 21.3 shows the variation of the e.m.f. induced across the ends of the coil with time *t*.

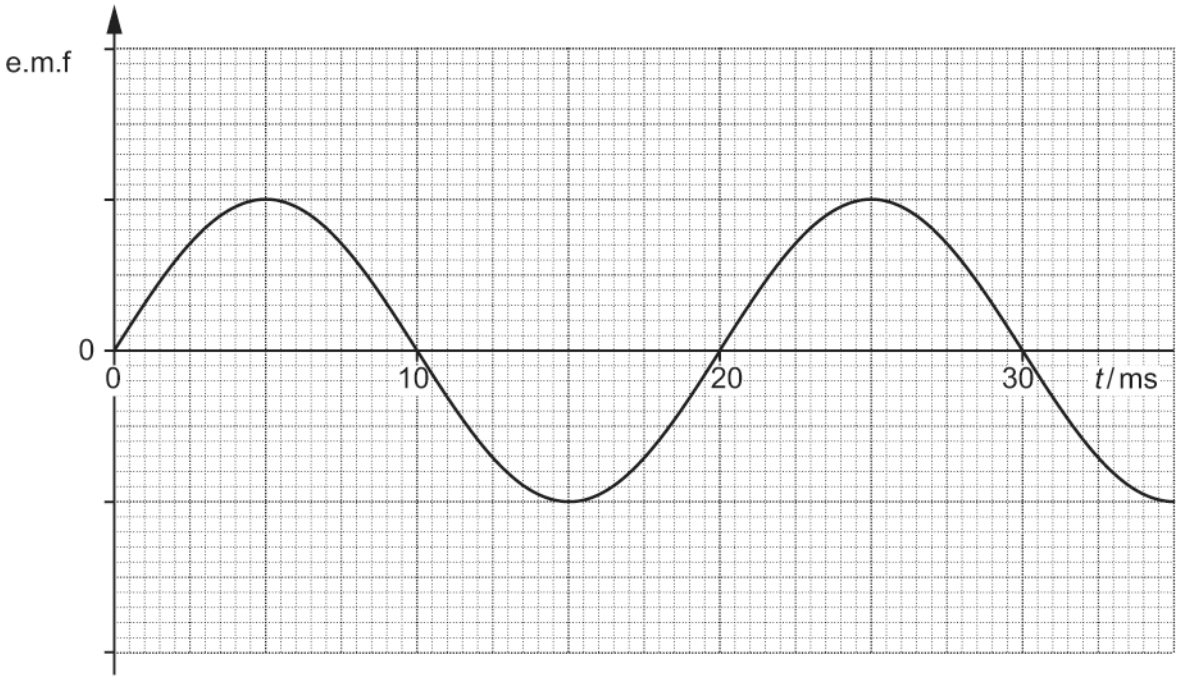

Fig. 21.3

The magnitude of the magnetic flux density of the uniform field is now halved and the coil is rotated at twice its previous frequency.

On Fig. 21.3 sketch the new variation of the e.m.f. induced with time *t*. **[2]**

STEMUP.CO.UK

25 Fig. 3.1 shows the design of a ‘mechanical’ torch.

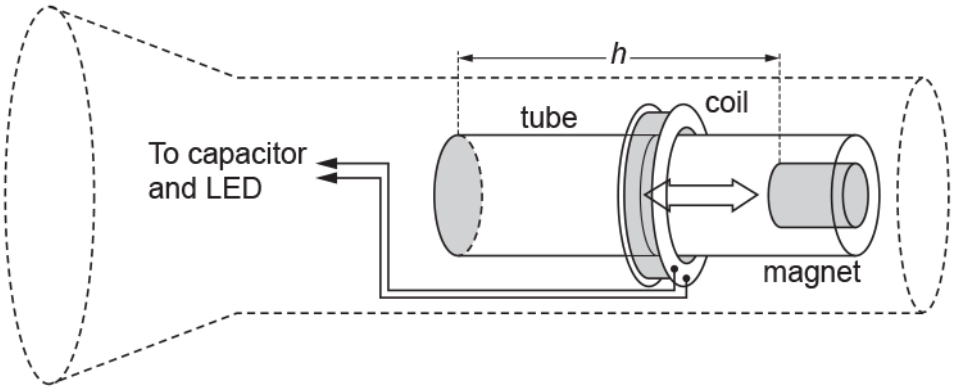

Fig. 3.1

There is no battery in the torch. Instead, when the torch is inverted, the magnet falls a short vertical distance *h* through the coil of wire, as shown in Fig. 3.2. This induces an electromotive force (e.m.f.) across the ends of the coil. The e.m.f. is used to store charge in a capacitor, which lights a light-emitting diode (LED) when it discharges.

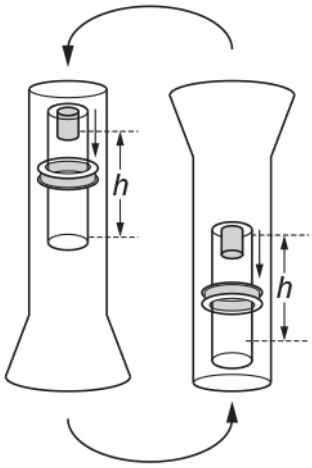

Fig. 3.2

Fig. 3.3 shows the variation with time of the e.m.f. generated as the magnet falls the distance *h.*

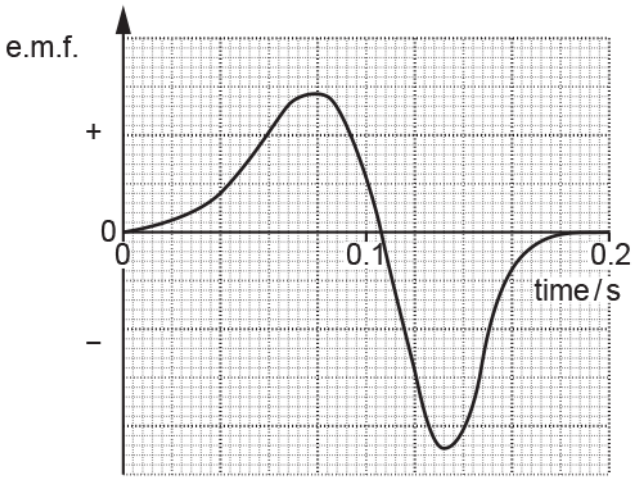

Fig. 3.3

STEMUP.CO.UK

Explain the shape of the curve in Fig. 3.3.

[3]

26 Which law indicates that charge is conserved?

A Lenz's law

B Coulomb's law

C Kirchhoff's first law

D Faraday's law of electromagnetic induction

Your answer [1]

STEMUP.CO.UK

27 The diagram shows four magnetic compasses placed at the same distance from point X.

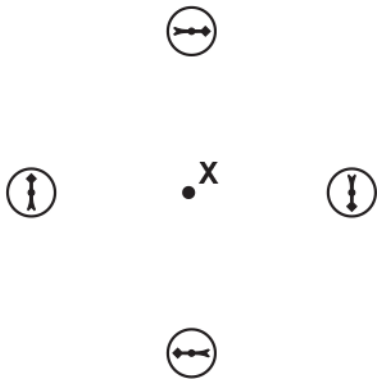

Which of the following is most likely to be at point X?

A permanent magnet

B current-carrying solenoid

C current-carrying flat coil

D straight current-carrying wire

Your answer [1]

28 A coil with 500 turns is placed in a uniform magnetic field.
The average cross-sectional area of the coil is 3.0×10^{-4} m^2.
The magnetic flux through the plane of the coil is reduced from 1.8×10^{-4} Wb to zero in a time *t*.
The average electromotive force (e.m.f.) induced across the ends of the coil is 0.75 V.

What is the value of *t* ?

A 3.6×10^{-5} s

B 2.4×10^{-4} s

C 0.12 s

D 8.3 s

© OCR 2022. You may photocopy this page.

Created in ExamBuilder

STEMUP.CO.UK

Your answer [1]

STEMUP.CO.UK

29 The number of turns on the coils of four ideal iron-cored transformers **A, B, C** and **D** are shown in the table below.

Transformer	Number of turns on the secondary coil	Number of turns on the primary coil
A	100	100
B	50	200
C	200	50
D	500	100

Each transformer is connected in turn to an alternating 240 V supply.

Which transformer will give the largest output current?

Your answer ☐ **[1]**

STEMUP.CO.UK

30 Fig. 20 illustrates a device used to determine the relative abundance of charged rubidium ions.

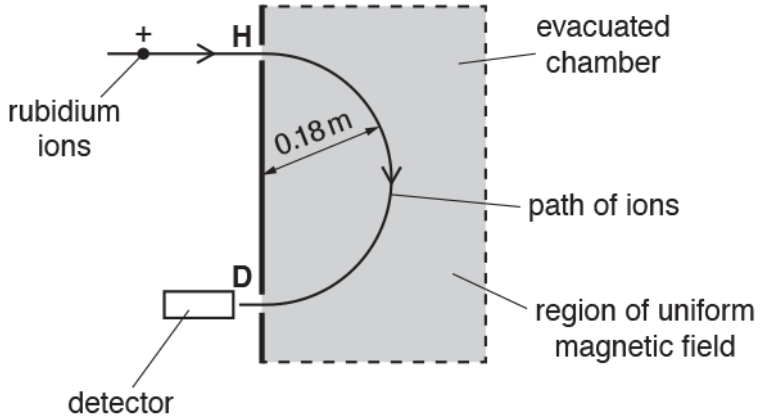

Fig. 20

A uniform magnetic field is applied to an evacuated chamber. The direction of the magnetic field is perpendicular to the plane of the paper.

A beam of positive rubidium ions enters the chamber through a hole at **H**. The ions travel in a semi-circular path in the magnetic field. The ions are detected at point **D**.

Each rubidium ion has charge $+1.6 \times 10^{-19}$ C and speed 4.8×10^{4} m s^{-1}.
The radius of the semi-circular path of the ions is 0.18 m.
The mass of a rubidium ion is 1.4×10^{-25} kg.

Calculate the magnitude of the magnetic flux density *B* of the magnetic field.

B = ... *T* **[3]**

STEMUP.CO.UK

31(a) The diagram below shows two long vertical current-carrying wires **X** and **Y**.

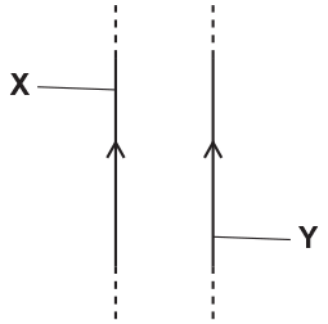

The direction of the current in each wire is the same.

Explain why wire **Y** experiences a force and deduce the direction of this force.

---

[3]

STEMUP.CO.UK

(b)

(i) State **Faraday's law of electromagnetic induction**.

---

[1]

(ii) The diagram below shows a simple transformer constructed by a student.

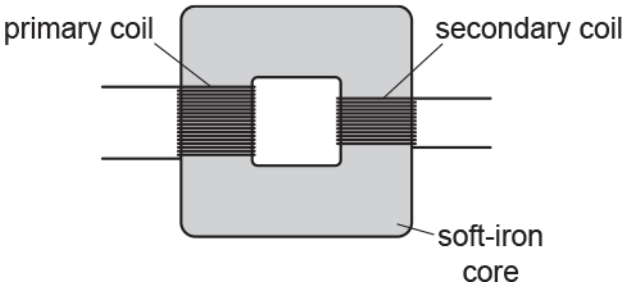

Describe how the student can do an experiment in the laboratory to show that the maximum electromotive force (e.m.f.) E induced in the secondary coil is directly proportional to the number of turns N on the secondary coil.

---

[3]

STEMUP.CO.UK

32 A student is doing an experiment on the magnetic force experienced by a current-carrying wire in a uniform magnetic field. The magnetic flux density *B* can be varied.

For a particular flux density, the current in the wire is 2.0A. The length of the wire in the field is 0.12 m. The angle between the current and the magnetic field is 30°. The force experienced by the wire is 7.7×10^{-2} N.

The student calculates *B* and records the results in a table.

Which row shows the correct table heading for *B* and the correct value for *B*?

	Table heading for *B*	Value for *B*
A	*B* / T	0.37
B	*B* / T	0.64
C	*B* / Wb	0.37
D	*B* / Wb	0.64

Your answer [ ] **[1]**

END OF QUESTION PAPER

STEMUP.CO.UK

Question			Answer/Indicative content	Marks	Guidance
1			The helium nucleus moves to the right. The path is a clockwise curve / looped (in the plane of the paper).	B1 B1	**Not** if the path is shown as a straight line. **Allow** 2 marks for clockwise curve / loop to the right. **Allow** 1 mark for a sketch showing an 'upward curve to the right' **Examiner's Comments** This proved to be a very testing question even for the top-end candidates. Many candidates failed to realise that the electric field would cause the helium nucleus to move towards the right. The path of the particle in the fields would be a combination of this translational motion to the right and a clockwise circular motion due to the effect of the magnetic field. The most popular incorrect answers were *'oval shaped path'* and *'helium particle spiralling out of the plane of the paper'*. It was good to see the odd correct path sketched with the correct supportive text. Examiners gave full credit for a clockwise looped path.
			Total	2	
2	a		The induced e.m.f. is (directly) proportional / equal to the rate of change of (magnetic) flux linkage.	B1	**Allow** $E = \frac{\Delta\Phi}{\Delta t}$ with all terms defined; E = induced e.m.f., Φ = (magnetic) flux linkage and t = time. **Examiner's Comments** The majority of the candidates gave perfect definitions for Faraday's law. Some made reference to *'cutting of field line'* or *'cutting of flux'*, but such answers often lacked clarity.

STEMUP.CO.UK

Question			Answer/Indicative content	Marks	Guidance
	b	i	There is no change in (magnetic) flux (linkage) or there is no change in the (magnetic) flux density.	B1	Allow 'no change in (magnetic) field strength'. Examiner's Comments The correct use of technical terms was important in answering this question. No credit was given for an answer such as *'the number of field lines remain the same'*. Most candidates realised that that there was no induced e.m.f. because there was no change in the flux linkage for the coil.
		ii	*E* = 0 between 0 to 3 cm, 5 – 8 cm and 10 – 12 cm.	B1	Tolerance: ± ¼ large square
		ii	Two 'pulses' where *B* is changing.	M1	Note : The pulses must have *E* = 0 at 3 cm, 5 cm, 8 cm and 10 cm; tolerance ± ¼ large square.
		ii	The pulses have opposite signs.	A1	Examiner's Comments This was a tough question with most sketch graphs demonstrating a poor understanding of electromagnetic induction. The modal mark was zero. Incorrect graphs ranged from mirror image sketch of the graph in Fig.5.3 to sinusoidal curves. Most high-scoring candidates secured two or more marks for a graph showing *E* = 0 between 0 to 3cm, 5 to 8 cm and 10 to 12 cm and two 'pulses' between 3-5 cm and 8-10 cm. Examiners were not too worried with the actual shapes of pulses, as long as they appeared in the correct positions on the x-axis.
			Total	5	

© OCR 2022. You may photocopy this page.

Created in ExamBuilder

STEMUP.CO.UK

Question			Answer/Indicative content	Marks	Guidance
3	a	i	(weight = *BIL*)		
		i	$6.8 \times 10^5 = 0.070 \times I \times 0.01$ (Any subject)	C1	
		i	$I = 0.097$ (A)	A1	Examiner's Comments Most candidates gained two marks for determining the current. Only a very small number of candidates forgot to convert the 1.0 cm length into metres.
		ii	The force on the cables will keep changing direction	B1	Examiner's Comments This was a low-scoring question with only a small number of candidates realising that the force experienced by the current-carrying cable would be changing direction.
	b	i	$BQv = mv^2/r$	M1	Allow *e, q* instead of *Q*
		i	$r = \frac{mv}{BQ}$	A1	Note: *r* must be the subject of this equation Examiner's Comments The majority of the candidates did extremely well in this question. The physics was clear and the manipulation of the equations was easy to follow. It was rare to see an incorrect answer. Examiners did not award any marks for just quoting the final equation $r = mv/BQ$ without any working.
		ii	($p = mv = BQr$; KE = ½ p^2/m)		
		ii	KE α r^2	C1	Allow full credit for correct alternative approaches
		ii	ratio = $\frac{4.8^2}{1.2^2}$		

© OCR 2022. You may photocopy this page.

Created in ExamBuilder

STEMUP.CO.UK

Question			Answer/Indicative content	Marks	Guidance
		ii	ratio = 16	A1	Allow 16: 1 Examiner's Comments This was a discriminating question, with many best candidates gaining full marks. The answers showed careful reasoning and good algebraic skills. The crucial step towards the correct answer was realising that v ∝ r and hence kinetic energy ∝ r^2. About half of the candidates did not make good use of their equation from **(b)(i)** and incorrectly arrived at answers such as 0.0625, √2, 2 and 4.
			Total	7	
4			C	1	
			Total	1	
5			A	1	
			Total	1	
6	a		The force is towards the centre of the circle. The force is perpendicular to the motion or no component of force in direction of motion; hence no work is done on the particle.	B1 B1	
	b		centripetal force provided by *BQv*; hence $\frac{mv^2}{r} = BQv$ $B = \frac{mv}{Qr} = \frac{9.11 \times 10^{-31} \times 5.0 \times 10^{7}}{1.6 \times 10^{-19} \times 0.018}$ $B = 1.6 \times 10^{-2}$(T)	C1 C1 A1	
			Total	5	
7			C	1	
			Total	1	
8			C	1	
			Total	1	

© OCR 2022. You may photocopy this page.

Created in ExamBuilder

STEMUP.CO.UK

Question			Answer/Indicative content	Marks	Guidance
9		i	The force is right angles to the motion / velocity.	B1	
		i	The particle describes a circle in the plane of the paper.	B1	
		ii	Particle experiences a force perpendicular to motion / velocity.	B1	
		ii	It moves to the right and either comes out or goes into the plane of the paper (in a parabolic path).	B1	
			Total	4	

© OCR 2022. You may photocopy this page.

Created in ExamBuilder

STEMUP.CO.UK

Question			Answer/Indicative content	Marks	Guidance
10	a		* Level 3 (5–6 marks) At least P1 and P2 M1, M2, M4 and M5 At least A2 and A3 At least C1 and C2 *There is a well-developed line of reasoning which is clear and logically structured. The information presented is relevant and substantiated.* Level 2 (3–4 marks) At least P1 M1, M4 and M2 or M5 At least A3 At least C1 *There is a line of reasoning presented with some structure. The information presented is in the most-part relevant and supported by some evidence.* Level 1 (1–2 marks) At least P1 At least M1 and M4 At least A3 At least C1 *The information is basic and communicated in an unstructured way. The information is supported by limited evidence and the relationship to the evidence may not be clear.* 0 marks No response or no response worthy of credit.	B1	plan P 1. vary speed of rotation of magnet using motor control 2. expect to see amplitude of signal increase and period of waveform decrease 3. measure (maximum) e.m.f. V and period T for each setting from oscilloscope screen. measurements M 1. maximum e.m.f. 2. measured from peak to peak distance on graticule 3. and using V/cm scale setting 4. period of rotation 5. measured along t-axis of graticule 6. and using s/cm time base setting. analysis A 1. record table of V, T 2. and (calculate and record) f = 1/T 3. plot graph of V against f conclusions C 1. astraight line graph 2. through origin 3. is required to validate Faraday's law.
	b	i	flux = BA = 0.20 × 0.10 × 0.080 = 0.0016 (Wb)	B1	
		i	induced emf = NBA/t = 80 × 0.0016/5 = 0.026 (V)	B1	

STEMUP.CO.UK

Question			Answer/Indicative content	Marks	Guidance
		ii	Lenz's law indicates that current must try to maintain the field as it collapses **or** current must produce same field as magnet to try to maintain the field.	M1	
		ii	current is anticlockwise in coil as viewed from S pole.	A1	
			Total	10	
11	a	i	F upwards between poles	B1	
		ii	$F = BIl = 0.032 \times 2.5 \times 0.06 = 4.8 \times 10^{-3}$ (N)	B1	
	b	i	$a = (-)\ 4\pi^2 f^2 x = 4 \times 9.87 \times 4900 \times 0.004$	C1	**allow** 774 (m s^{-2})
		i	a = 770 (m s^{-2})	A1	
		ii	**1** sketch showing one wavelength and 140 (Hz)	B1	both sketch and value required for 1 mark
		ii	**2** driving force is around nodal point / AW;	B1	**max** 3 of the 4 marking points
		ii	points either side of nodal point try to move in opposite directions when force in one direction / AW;	B1	
		ii	move magnet to antinodal point; ¼ of distance between clamps	B1	**not** increase current
	c	i	$f \propto \sqrt{T}$ so $f = 70/\sqrt{2} = 49$ or 50 Hz	B1	
		ii	**1** μ increases / goes up by 0.4%	B1	**allow** +0.4% NOT 0.4%
		ii	**2** 0.2%,	B1	**or** half of answer to **(ii)1**
		ii	f is lower because μ is bigger and μ is on the bottom of the formula	B1	**or** greater inertia present with same restoring force / other physical argument
			Total	12	

© OCR 2022. You may photocopy this page.

Created in ExamBuilder

STEMUP.CO.UK

Question			Answer/Indicative content	Marks	Guidance
12	a		**Level 3 (5–6 marks)** A good plan with discussion of sensitivity and measurements that need taking. Detailed description of analysis needed linked to robust conclusions and consideration of a fair test. extra points from sections may balance omissions from others *The ideas are well structured providing significant clarity in the communication of the science.* **Level 2 (3–4 marks)** A good plan possibly with mention of sensitivity. Measurements that need taking should be described. Analysis linked to conclusions and possibly consideration of a fair test. extra points from sections may balance omissions from others *There is partial structuring of the ideas with communication of the science generally clear.* **Level 1 (1–2 marks)** A plan with discussion of measurements that need taking. Description of analysis needed linked to a conclusion. *extra points from sections may balance omissions from others The ideas are poorly structured and impede the communication of the science.* **Level 0 (0 marks)** Insufficient relevant science.	B1	**plan P** • investigate one variable with the other fixed • oscilloscope time base can be off • do rough preliminary test over range of variable to check that there is a suitable variation in oscilloscope V • choose and fix f of *I* and value of other variable (M3); • measure e.m.f. V for 5 or 6 settings of variable from oscilloscope screen **sensitivity S** • magnitude of detected signal depends on rate of change of flux linkage / Faraday's law through search coil • so increases with f and B (N and A of search coil are fixed) • for large B use small *L* f changing N **or** large N if changing *L* **measurements M** • measure (maximum) e.m.f. V (using V/cm scale setting) on oscilloscope • measure peak to peak distance on graticule if time base not switched off • keep *L* fixed and adjust croc. clips to change N **or** keep N fixed and alter *L* (use ruler) **analysis A** • record table of V against *N* or *L* • plot graph of V against *N* or 1/ *L* **conclusions C** • straight line graph • through origin is expected • to validate given relationship **fair test F** • ensure that Slinky coils are uniformly spaced and not touching together anywhere • croc. clips make good contact at only one point on coil • plane of coil must be vertical **and** coaxial with Slinky

© OCR 2022. You may photocopy this page.

Created in ExamBuilder

STEMUP.CO.UK

Question			Answer/Indicative content	Marks	Guidance
	b	i	Two closed loops linking primary coil	B1	lines not touching / crossing, both passing only through iron core
		ii	magnetic flux ϕ: because the loops of magnetic field (are continuous and) all pass (through the iron core) through each coil	B1	**allow** magnetic flux is the number of lines of the magnetic field if **(i)** is correct
		iii iii	for magnetic flux density: 3 turn coil as A is smallest OR for magnetic flux linkage: 5 turn coil as largest number of turns	B1 B1	Note: (iii) and (iv) can be answered in either order ϕ is same in each coil, B = ϕ/A OR ϕ is same in each coil, m.f.l. = ϕN
			Total	10	

STEMUP.CO.UK

Question			Answer/Indicative content	Marks	Guidance
13	a		$(B = \frac{F}{IL})$		Alternative: $B = \frac{F}{Qv}$
			F ☐ kg m s^{-2} / I ☐ C s^{-1} and L ☐ m	C1	F ☐ kg m s^{-2} / Q ☐ C and v ☐ m s^{-1} C1
			T ☐ kg C^{-1} s^{-1}	A1	T ☐ kg C^{-1} s^{-1} A1
					Allow $\frac{kg}{Cs}$, $\frac{kgC^{-1}}{s}$, etc.
					Examiner's Comments Most candidates correctly used either $F = BIL$ or $F = BQv$ to determine the tesla in terms of kg, C and s. The answers were well-structured with majority of the candidates scoring two marks. The most common error from the low-scoring candidates was to quote the unit for force as kg instead of kg m s^{-2}.
	b	i	$F = \frac{9.11\times10^{-31}\times(7.0\times10^{6})^{2}}{2.5\times10^{-2}}$ /	C1	Alternative: Allow e instead of Q $BQv = \frac{mv^2}{r}$ or $BQ = \frac{mv}{r}$ C1
			$F = 1.79 \times 10^{-15}$ (N)		
			($F = BQv$)		
		i	$1.79 \times 10^{-15} = B \times 1.6 \times 10^{-19} \times 7.0 \times 10^{6}$ (Any subject)	C1	$B = \frac{9.11\times10^{-31}\times7.0\times10^{6}}{1.6\times10^{-19}\times2.5\times10^{-2}}$ (Any subject) C1

STEMUP.CO.UK

Question			Answer/Indicative content	Marks	Guidance
		i	$B = 1.6 \times 10^{-3}$ (T)	A1	$B = 1.6 \times 10^{-3}$ (T) A1 Allow: 2 marks for 7.97×10^{-4} (T); 5.0 cm used instead of 2.5 cm (Allow 8×10^{-4} T) Examiner's Comments The majority of the candidates did extremely well in this question. The physics was clear and the manipulation of the equations was easy to follow. The majority of the candidates scored two or more marks. Many candidates had the confidence to derive an equation for the magnetic flux density *B* and then substitute the values. The most frequent error was to use the diameter of 5.0 cm as the radius of the circular path of the electrons.
		ii ii	(period = $\frac{2\pi \times 2.5 \times 10^{-2}}{7.0 \times 10^{6}}$) period = 2.2×10^{-8} (s)	B1	Allow: 1 mark for 4.5×10^{-8} (s) as ECF if 5.0 cm was used in **(i)**. Examiner's Comments In order to calculate the period, candidates had to divide the circumference of the path by the speed. This was effortlessly done by most candidates. There was error carried forward rule applied for candidates who used 5.0 cm as the radius in **(i)**.
		iii	$BQ = mv/r$ (Allow any subject) or $\frac{v}{r} = \text{constant}$	M1	Allow other alternatives, e.g: $T = 2\pi m/QB$ M1 *m, Q* and *B* are constants (hence *T* is constant) A1

STEMUP.CO.UK

Question			Answer/Indicative content	Marks	Guidance
		iii	T = distance / speed or $T = 2\pi r/v$ or $T \propto r/v$ (hence T is constant)	A1	or The distance / circumference / r doubles M1 T = distance/speed or $T = 2\pi r/v$ or $T \propto r/v$ (hence T is constant) A1 Examiner's Comments The answers were varied. Top-end candidates often opted for a mathematical approach. A significant number of candidates gained no marks. The most common answers from such candidates was '*distance travelled increases, so period must be the same*'. A few candidates thought that the period had something to do with the relativistic increase in the mass of the electron.
			Total	8	
14			Any **two** from: • Direction of the field (is incorrect) (AW) • The field lines should be curved / not straight (lines) • The field line(s) should be perpendicular at the plate(s) • The separation between the field lines cannot be the same / diagram shows a uniform field	B1×2	**Allow** answers on Fig. 2.1 Examiner's Comments Almost all candidates picked up two marks for correctly identifying two errors with the field pattern shown in Fig. 2.1. The three most popular responses were: • *The direction of the field should be from positive to negative.* • *The field lines should be perpendicular to both plates.* • *The separation between field lines cannot be the same; it's a non-uniform field.*
			Total	2	

STEMUP.CO.UK

Question			Answer/Indicative content	Marks	Guidance
15	a	i	(magnetic flux linkage = magnetic) flux × (number of) turns	B1	Allow: BAN, where *B* is (perpendicular magnetic) flux density / (perpendicular magnetic) field strength, *A* is (cross sectional) area and *N* is (the number of) turns Examiner's Comments About half of the candidates gave a decent definition for magnetic flux linkage. The other half showed poor recall of *magnetic flux* by confusing it with *magnetic flux density*. This was a missed opportunity for picking up an easy mark. Lack of knowledge here also led to poor answers in **(ii)**.
		ii	$N = \frac{L}{2\pi r}$(Any subject)	B1	Examiner's Comments The success here depended on knowing the term *magnetic flux linkage* and not confusing it with *magnetic flux*. The question discriminated well with many top-end candidates effortlessly picking up two marks. A significant number of candidates did not use the hint on 'circumference' in the question and attempted to determine the number of turns *N* using πr^2 rather than $2\pi r$. It is worth reminding all candidates that in a 'show' question, it is vital to clearly set out all the steps of the calculation. Some intermediate explanation is also advisable.
		iii	(magnetic flux linkage =) *BAN* (magnetic flux linkage =) $B \times \pi r^2 \times \frac{L}{2\pi r}$	C1	No ECF from **(ii)1**
		iii	(magnetic flux linkage =) $\frac{BrL}{2}$	A0	

© OCR 2022. You may photocopy this page.

Created in ExamBuilder

STEMUP.CO.UK

Question			Answer/Indicative content	Marks	Guidance
	b	i	e.m.f. (induced) ∝ rate of change of (magnetic) flux linkage	B1	**Allow** an 'equal sign' **Allow** $E = (-)\ \Delta N\varphi/\Delta t$ where E is e.m.f. (induced), $N\varphi$ is (magnetic) flux linkage and t is time **Not** voltage induced **Not** 'cutting *of* flux' **Examiner's Comments** Most candidates gave a perfect definition of the Faraday's law of electromagnetic induction. Only a small number of candidates gave vague answers or omitted the question.
		ii	E is zero only at 1.0 ms, 3.0 ms and 5 ms	M1	
		ii	Correct shape of graph	A1	**Ignore** 'inversion' of the sinusoidal curve **Examiner's Comments** Having just given a statement for Faraday's law of electromagnetic induction, many candidates drew a correct graph for induced e.m.f. E against time t. The graph was a cosine graph intersecting the time axis at 1.0 ms, 3.0 ms and 5.0 ms. Inversion of this graph was ignored by the examiners. Many of the sketched graphs were neither smooth nor regular, but enough correct physics was demonstrated for two marks. A range of incorrect answers were seen, including sine, triangular and square graphs.
	c		There is an alternating (magnetic) flux / flux density / field (in primary coil)	M1	**Allow** changing / varying for alternating throughout **Not** *alternating current in supply*

© OCR 2022. You may photocopy this page.

Created in ExamBuilder

STEMUP.CO.UK

Question			Answer/Indicative content	Marks	Guidance
			Idea of flux / flux density / field within iron / core and The secondary coil is linked by an alternating (magnetic) flux (density / linkage)	A1	Examiner's Comments Candidates always find questions on electromagnetism rather challenging and this was no exception. About a third of the candidates gave flawless answers to explain how an e.m.f. was induced in the secondary coil of the transformer. Some candidates lost a mark for not mentioning that the iron core transferred the alternating magnetic flux from the primary coil to the secondary coil. A small number of candidates thought that iron core transferred the *'alternating current between the transformer coils'*.
			Total	8	
16			D	1	
			Total	1	
17			A	1	
			Total	1	
18			D	1	
			Total	1	
19			D	1	
			Total	1	

© OCR 2022. You may photocopy this page.

Created in ExamBuilder

STEMUP.CO.UK

Question			Answer/Indicative content	Marks	Guidance
20	a				Use level of response annotations in RM Assessor, e.g. L2 for 4 marks, L2ˆ for 3 marks, etc. Ignore incorrect references to the terms precision and accuracy
			Level 3 (5-6 marks) Clear evaluation of Fig. 22.1 and clear analysis *There is a well-developed line of reasoning which is clear and logically structured. The information presented is relevant and substantiated.* Level 2 (3-4 marks) Some evaluation of Fig. 22.1 and some analysis *There is a line of reasoning presented with some structure.* *The information presented is in the most part relevant and supported by some evidence.* Level 1 (1-2 marks) Limited evaluation of Fig. 22.1 or limited analysis *There is an attempt at a logical structure with a line of reasoning. The information is in the most part relevant.* 0 marks *No response or no response worthy of credit.*	B1×6	Indicative scientific points may include: Evaluation of Fig. 22.1 • Comment on the line • The straight line misses one error bar / anomalous point ringed or indicated • Too few data points plotted • The triangle used to calculate the gradient is (too) small • Some plots should have been repeated / checked • No error bars for current • 'Not regular intervals' (for current) • No origin shown (AW) Evaluation of analysis • The value of *B* is close to the accepted value • The difference of only 7% • No absolute or percentage uncertainty in *B* shown (AW) • Worst-fit line or maximum / minimum gradient line could have been used to determine the (absolute or percentage) uncertainty in *B* • *F* against *I* graph should be a straight line or • *BL* = gradient (any subject) Examiner's Comment This was the second level of response (LoR) question in the paper. It required evaluation of a graph drawn by a student and the analysis shown in the box on page 24. Most candidates realised that the graph had few data points, the triangle used for the gradient was too small and the line drawn totally missed one of the error bars. The analysis shown by the candidate did not include an absolute uncertainty in *B,*

STEMUP.CO.UK

Question			Answer/Indicative content	Marks	Guidance
					which made the statement written by the student lack credibility. Many candidates wrote about drawing doing a line of worst-fit and determining the percentage uncertainty. This was only possible if there were more data points and the error bars for the *F* values reduced by perhaps repeating the measurements. Once again, there was a good spread of marks amongst the three levels.
	b	i	There is a changing / fluctuating (magnetic) field / flux (linkage)	M1	**Note:** This changing flux can be anywhere **Allow** 'the direction of the field oscillates'
			(magnetic) field / flux (linkage) in <u>core</u> and <u>secondary</u> (coil)	A1	**Allow** 'the core helps to link the flux to the secondary coil'
			Statement of Faraday's law: e.m.f. (induced) ∝ <u>*rate*</u> of change of (magnetic) flux <u>linkage</u>	B1	**Allow** 'equal to / =' **Ignore** 'cutting of flux' **Not** just $E = (-)\Delta(N\varphi)/\Delta t$ **Examiner's Comment** The topic electromagnetic induction always challenges candidates. Successful responses often showed correct use of technical terms such as *magnetic flux* or *flux linkage.* Most candidates scored a mark for correctly stating Faraday's law of electromagnetic induction. Many realised that an alternating current produced an alternating magnetic flux within the iron core and this change in flux produced an e.m.f. at the secondary coil. One of the popular misconceptions was that there was an alternating current (or induced e.m.f.) within the iron-core. A small number of candidates referred to **electro**magnetic field in their descriptions rather than magnetic field.

© OCR 2022. You may photocopy this page.

Created in ExamBuilder

STEMUP.CO.UK

Question			Answer/Indicative content	Marks	Guidance
		ii	1 (I_S =) 24/12 or 2.0 (A)	C1	
			(I_P =) $\frac{20}{400} \times 2.0$		
			(current in primary =) 0.10 (A)	A1	Allow 1 sf answer
			or		
			(V_P =) 12 × 20 or 240 (V)	C1	
			(I_P =) $\frac{24}{240}$		
			(current in primary =) 0.10 (A)	A1	Allow 1 sf answer
			2 Idea of changing / increasing (magnetic) field / flux / current (in primary) at the start	B1	Note: Any labels used must be clearly defined
			Eventually current and flux (linkage) are constant, therefore no e.m.f.	B1	Examiner's Comment This question on current in the primary coil was successfully answered by most candidates. The most favourable method was to calculate the current in the secondary and then the current in the primary coil. The turn-ratio equation and $P = VI$ were effortlessly used to arrive at the correct answer of 0.10 A. Full marks were rarely scored but many top-end candidates did manage to score a mark for suggesting that the lamp was lit for a short period of time at the start because *'there was a changing magnetic flux as the current increased from zero to a steady value'*. Too many answers focussed on the requirement of an alternating supply for an induced e.m.f. in the secondary coil and how a battery is not an alternating supply.
			Total	13	

© OCR 2022. You may photocopy this page.

Created in ExamBuilder

STEMUP.CO.UK

Question			Answer/Indicative content	Marks	Guidance
21	a		F = Bev **and** F = eE E = V / a **or** F = (eE) = eV / a Bev = eV / a giving V = Bva	B1 B1 B1	**allow** Q or q for e **Examiner's Comments** This was an exercise in writing basic definitions in algebraic form and then using them to derive a given equation. More than half of the candidates managed to gain full marks with less than one third scoring zero. The presentation was sometimes difficult to follow with the inclusion of unnecessary equations and deletions and the substitution of *d* for *a* in the last line.
	b	i	I = nAev; v = 60 × 10^{-3}/1.2 × 10^{23} × 1.6 × 10^{-19} × 5.0 × 0.2 x10^{-6} v = 3.1 (m s^{-1})	C1 C1 A1	**allow** any subject
		ii	V = 80 × 10^{-3} × 3.1 × 5.0 × 10^{-3} = 1.2 × 10^{-3} (V)	A1	**ecf (b)(i); allow** 1.2 mV; 1.3 × 10^{-3} (V) **Examiner's Comments** This exercise of choosing a formula, substituting values in correct units and evaluating was done well with about three quarters of the candidates gaining full marks.
	c	i	Hall probe only compares B-fields / AW **or** V will be too small / less than 1 mV so not easy to measure	B1	allow any sensible comment, e.g. how do you convert the measured V into a B value

© OCR 2022. You may photocopy this page.

Created in ExamBuilder

STEMUP.CO.UK

Question			Answer/Indicative content	Marks	Guidance
		ii	find B using F = B*Il*; F is measured by weighing magnets (e.g. placed on top pan balance assuming wire is fixed); graph of F against *I* to find B*(I)* from gradient / AW; greatest uncertainty: measurement of *I* in B-field sensible reason / justification for choosing *I* **or** small masses	B1 B1 B1 B1 B1	**max** 4 of the 5 marking points **alt** measure F by adding small masses to wire to return it to zero current position **or** use readings of F at several *I* to find average F/*I*, etc. **or** measurement of small masses in alt. method, etc quantitative suggestion about % error i.e. *I* small (1 mm in 60) leading to large % uncertainty **or** difficulty in determining edge / end of B-field Examiner's Comments Most candidates did not refer back to (b)(ii), noting that the potential difference across the Hall probe would be very small making the probe an unsuitable instrument for measuring the magnetic flux density, *B.* However almost all were familiar with the experiment where the magnets are mounted on a top pan balance with a fixed wire carrying the current. Only a small number varied the current and plotted a graph to obtain a more accurate value of *B*. Also few appreciated that the edges of the field spread out making the length of wire in the field the least reliable measurement.
			Total	12	

© OCR 2022. You may photocopy this page.

Created in ExamBuilder

STEMUP.CO.UK

Question			Answer/Indicative content	Marks	Guidance
22	a	i	the flux in the coil changes/ increases/ decreases/ varies (caused by the spinning/rotating magnet) causing a sinusoidal/alternating e.m.f./AW	B1 B1	**or** e.m.f. is proportional to /equals rate of change of flux linkage/linking the coil **or qualification, e.g.** magnet vertical gives minimum flux through core or maximum rate of change of flux or vice versa with magnet horizontal **or** maximum flux is when emf is zero **or** minimum flux is when emf is maximum **or** vice versa
		ii	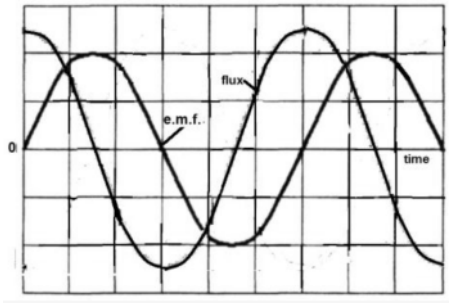	B1	**allow** ± cos wave of correct period, constant amplitude at least one cycle **N.B.** quality: curve must look like a reasonable sine wave as one is present on the page to copy Examiner's Comments In part (i) many of the candidates described the phase shift that they drew in the sketch graph of part (ii) by stating either the magnitude or the rate of change of the flux linkage when the induced e.m.f. was zero or a maximum. The majority quoted Faraday's law either in words or as a mathematical equation. Some candidates introduced current and Lenz's law not appreciating that an oscilloscope is effectively a voltmeter. Few described the whole picture of a steadily rotating magnetic field sweeping through a coil creating a changing flux linkage.
		iii	$\phi = BA = V/2\pi fN = 1.2/(2 \times \pi \times 24 \times 150)$ $\phi = 5.3 \times 10^{-5}$ Wb / T m^2	 B1 B1	 **allow no other** unit combinations; NOT T m^{-2}

STEMUP.CO.UK

Question			Answer/Indicative content	Marks	Guidance
	b		Level 3 (5–6 marks) Clear description, some measurements and full analysis *There is a well-developed line of reasoning which is clear and logically structured. The information presented is relevant and substantiated.* Level 2 (3–4 marks) Some description, some measurements and some analysis. *There is a line of reasoning presented with some structure. The information presented is in the most-part relevant and supported by some evidence.* Level 1 (1–2 marks) Limited description and/or limited measurements and/or limited analysis *There is an attempt at a logical structure with a line of reasoning. The information is in the most part relevant.* 0 marks No response or no response worthy of credit.	B1 × 6	Indicative scientific points may include: Description a. Signal generator/a.c. supply connected to coil X b. Coil Y connected to voltmeter / oscilloscope (can be ondiagram) c. Use oscilloscope to determine period / frequency or readoff signal generator d. Adjust signal generator / use of rheostat to keep currentconstant in coil X Measurements 1. Vary *f* and measure *V* 2. Keep current in coil X constant 3. Detail on how to measure e.m.f. e.g. 'height x *y*-gain' 4. Detail on how to measure period on oscilloscopescreen using time base and hence *f* Analysis 1. Determine f from period measurement, f = 1/T 2. Plot a graph of *V* against *f* 3. Relationship valid if straight line through the origin Examiner's Comments From the proposed arrangements for the investigation, it was apparent that most of the candidates were unfamiliar with the most suitable equipment for this experiment, namely a signal generator. Many improvised by using an ac supply with a variable frequency. A minority of these believed that by increasing the voltage of their power supply it would alter the frequency. Most drew a cell or battery symbol for the ac supply. Others improvised by using the rotating magnet from part (a) but had not realised the significance of the calculation in part (a)(iii) which indicated that at 24 revolutions per second the output voltage was 1.2 V. This

© OCR 2022. You may photocopy this page.

Created in ExamBuilder

STEMUP.CO.UK

Question			Answer/Indicative content	Marks	Guidance
					made the suggested method of using a stop watch to find the period of rotation impracticable. Few realised that the oscilloscope as a voltmeter could measure both the output voltage and the period of the ac. The instrument was often connected in series in the primary circuit. No one realised that the input current has to be constant to provide a constant flux. Despite all of these difficulties most candidates managed to write sensible statements worthy of credit but rarely full marks. The author of the example shown (exemplar 9) has used the rotating magnet as the ac source and continued with the clues from part (a) to produce an L3 quality answer. **Exemplar 9** 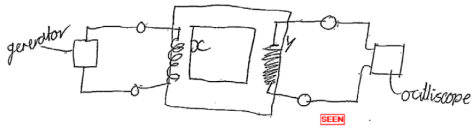 Using some form of ~~signal generator~~ alternating current generator with variable frequency ~~set~~ connected to X and an oscilloscope connected to Y Vary frequency f from the generator either by increasing emp rotation of ~~motor~~ magnet or using a built in frequency adjustment from the oscilloscope measure V by the ~~dis~~ height of the peaks X voltage base setting and frequency ~~by~~ distance by measuring time period as distance between peaks ~~and~~ X time base setting and $f = \frac{1}{T}$ as $\frac{V_x}{V_y} = \frac{N_x}{N_y}$ and N_x and N_y (number of turns in X and Y) are constant $V_x \propto V_y$ so as V_x should be $\propto$ frequency ~~$V_y \propto f$ so~~ $V_y \propto$ frequency so plotting a graph of V_y ~~and f~~ against f for varing frequency should be a straight line through the origin if the relationship is correct. L3
			Total	11	
23			C	1	
			Total	1	

STEMUP.CO.UK

Question			Answer/Indicative content	Marks	Guidance
24	a	i	The gradient is maximum / maximum rate of change of *B* / maximum rate of change of flux (linkage)	B1	**Allow** slope instead of gradient <u>Examiner's Comments</u> Although worth just 1 mark, this question did provide good opportunity for top-end candidates to pick up one mark. Many candidates quoted Faraday's law of electromagnetic induction, without mentioning that the **rate** of change of flux (linkage) was **maximum** at *B* = 0. Low-scoring candidates wrote about the orientation of the coil relative to the magnetic field or the *'cutting'* of field lines. None of the explanations led to any marks being credited.

STEMUP.CO.UK

Question			Answer/Indicative content	Marks	Guidance
		ii	Tangent drawn to curve at $B = 0$	C1	
			gradient = 12.5	C1	**Allow** 11.70 to 13.30; no need to check calculation **Allow** fraction if calculated value is within the range
			(maximum e.m.f. = $12.5 \times 14 \times 10^{-4} \times 85$)		
			maximum e.m.f. = 1.5 (V)	A1	**Allow** ECF from the gradient value if value is outside the range **Alternative:** $E = BAN_{\omega}$ C1 $E = 40 \times 10^{-3} \times 14 \times 10^{-4} \times 85 \times 2\pi \times 50$ C1 maximum e.m.f. = 1.5 (V) A1 <u>Examiner's Comments</u> Most candidates followed the question and drew decent tangents on Fig. 21.2. Most of the tangents were acceptable, but a few either crossed the curve or had very thick pencil lines. A significant number of candidates quoted the maximum e.m.f. to be equal to the magnitude of the gradient of the tangent. Top-end candidates faced no obstacles here; the gradient was multiplied by [$85 \times 14 \times 10^{-4}$] to give an answer around 1.5 V. Once again, a good number of candidates were picking the odd mark through error carried. Converting the cross-sectional area of 14 cm^2 into 14×10^{-4} m^2 was a challenge for some of the candidates in the middle and lower quartiles.

© OCR 2022. You may photocopy this page.

Created in ExamBuilder

STEMUP.CO.UK

Question			Answer/Indicative content	Marks	Guidance
	b		Sinusoidal curve with the same peak e.m.f. Sinusoidal curve with half period	B1 B1	**Note** curve must show at least half a period **Allow** ± 1 small square for e.m.f. **Ignore** phase **Note** graph must show at least half a period **Allow** ± 1 small square for *t* <u>Examiner's Comments</u> Most candidates scored a mark for showing that the period of the new e.m.f. trace was halved. Only a small proportional had the peak e.m.f. unchanged; the most frequent incorrect trace showed the peak e.m.f. also being halved. The sinusoidal curves were generally well-sketched.
			Total	6	

© OCR 2022. You may photocopy this page.

Created in ExamBuilder

STEMUP.CO.UK

Question			Answer/Indicative content	Marks	Guidance
25			◦ (Induced) e.m.f. is caused by a change in (magnetic) flux (linkage) / (Induced) e.m.f. is proportional (or equal to) the rate of change of (magnetic) flux (linkage) • The peaks are inverse / e.m.f. changes from positive to negative because: the rate of change of magnetic flux linking the coil changes sign **or** the flux (linkage) increases and then decreases **or** description in terms of Lenz's law as seen by coil to conserve energy • The e.m.f.becomes zero because: the (rate of) change of magnetic flux is zero when the magnet is in the middle of the coil • The second peak has a larger negative amplitude because: the **rate** of change of flux linkage is greater (when the magnet leaves the coil compared to when it enters) • The pulses have different widths because: the second Δt is shorter (since magnet accelerates) **or** areas under curves must be the same (because total change of flux linkage is the same on entering and leaving coil) / area under curve = $V\Delta t = N\Delta\phi$ (so bigger V leads to smaller Δt)	B1 x 3	**Maximum 3** marks from 4 marking points. **Not** voltage or p.d. or current for e.m.f. **Accept** 'cutting of field lines by coil' for 'change in flux' Answers to any of the last three points must link clearly to the correct graph characteristic **Allow** the North (or South) pole first approaches then recedes **Ignore** magnet approaches then recedes / field increases then decreases **Not** torch is inverted **Allow** no field lines are being cut **Allow** the magnet is accelerating / is travelling faster when it exits the coil Examiner's Comments Candidates need to remember to look at the command word in the question. Here it was 'explain'; not 'describe'. The key features to be explained were: • why is an e.m.f generated? • why does the e.m.f change sign? • why does the e.m.f fall to zero halfway through the fall? • why is the maximum negative e.m.f greater than the maximum positive e.m.f / why is the width of the second peak smaller than that of the first peak?

© OCR 2022. You may photocopy this page.

Created in ExamBuilder

STEMUP.CO.UK

Question			Answer/Indicative content	Marks	Guidance
					The strongest responses were those where candidates stated at the outset what gave rise to the e.m.f. Some candidates clearly recognised the need to state Faraday's law, but simply quoted the formula without defining any terms and so could not receive credit. Weaker responses were characterised by describing the shape of the graph in terms of the position of the magnet - often incorrectly – rather than in terms of flux linkage. A common misconception was stating that the negative peak was caused by the magnet returning after an inversion, with the zero e.m.f. just after 0.1s being caused by the magnet being temporarily stationary. However, the question clearly states that 'Fig.3.3 shows … the e.m.f. generated … as the magnet falls the distance h'. Exemplar 3 below demonstrates clearly this common misconception. Exemplar 3 The first part of the curve the Emf is increasesing as the magnet gets closer to the coil. The peak is when the magnet is in the middle of the coil as the magnet moves away so does the curve decrease. As the magnet is now moving in the opposite direction the emf is negative. It takes less time on the way back as the electric field repels it. [3]
			Total	3	
26			c	1	<u>Examiner's Comments</u> This was a well-answered question with most candidates correctly recalling that charge is conserved according to Kirchhoff's first law. A significant number of candidates distracted towards **B**; perhaps because of the unit of charge is the coulomb.
			Total	1	
27			D	1	
			Total	1	

STEMUP.CO.UK

Question			Answer/Indicative content	Marks	Guidance
28			C	1	
			Total	1	
29			B	1	
			Total	1	
30			*F = BQv* and *F =mv²/r* or *B = mv/Qr* (Any subject) (B =) $\frac{1.4\times10^{-25}\times4.8\times10^{4}}{1.6\times10^{-19}\times0.18}$ B = 0.23 (T)	C1 C1 A1	Allow *e* <u>Examiner's Comments</u> This question on the circular motion of charged particles in a uniform magnetic field was answered with confidence and flair. Most candidates got the correct answer of 0.23 T for the magnetic flux density. A small number of candidates, mainly at the low-end, were using incorrect equation for the magnetic force experienced by the ions. Some of these equations were hybrids of the **electric** force experienced by charged particles.
			Total	3	

© OCR 2022. You may photocopy this page.

Created in ExamBuilder

STEMUP.CO.UK

Question			Answer/Indicative content	Marks	Guidance
31	a		Magnetic field (around current-carrying wire) (Fleming's) left-hand rule mentioned (Magnetic) field into page, (current is up the page) **and** force is to the left / towards X	B1 B1 B1	**Not** magnetic force **Allow** 'field into page and wires attract' **Note** the field direction and force direction can be shown on the figure
	b	i	(induced) e.m.f. is (directly) proportional / equal to the rate of change of (magnetic) flux linkage	B1	**Not** current **Allow** 'rate of cutting' for 'rate of change'
		ii	Connect the primary (coil) to an alternating voltage / current Oscilloscope connected across secondary coil / to measure *E* A graph of *E* against *N* will be a straight line through the origin.	B1 B1 B1	**Allow** AC (can be on the figure) **Not** changing / variable for alternating **Allow** voltmeter (can be on the figure) **Allow** p.d. / voltage for e.m.f. / *E* throughout **Ignore** any component (e.g. lamp or resistor) connected across the secondary coil **Allow** ($E \div N$) = constant
			Total	7	
32			B	1	
			Total	1	

© OCR 2022. You may photocopy this page.

Created in ExamBuilder

STEMUP.CO.UK