OCR A-LEVEL PHYSICS A · H556

PHYSICS

EXAM QUESTION PACK

6.2 ELECTRIC FIELDS

SCORE	PERCENTAGE
/195	%

STEMUP

These questions belong to OCR, not to us.

The examination questions, mark schemes and examiner comments in this pack were written and published by OCR. They are past assessment materials, reproduced here so that students can revise from them.

What we do not own

STEMUP is not affiliated with OCR and does not own, and makes no claim to own, any of the question, mark scheme or examiner report material in this pack. OCR has not endorsed, approved or been involved in the production of it. OCR and the qualification titles used here belong to their respective owners and appear for identification only.

Where to find the originals

OCR publishes its past papers, mark schemes and examiner reports free of charge. Always check the current specification at ocr.org.uk before you revise, because content and wording can change between series.

If you hold the rights to any material in this pack and would like it amended or removed, contact admin@stemup.co.uk and we will act on it.

1(a) Fig. 1.1 shows a negatively charged metal sphere close to a positively charged metal plate.

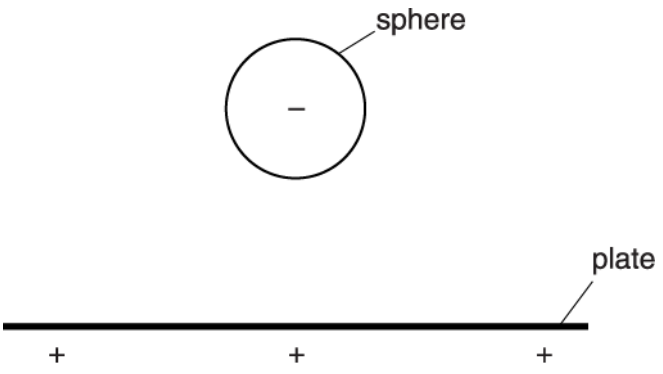

Fig. 1.1

On Fig. 1.1, draw a minimum of five field lines to show the electric field pattern between the plate and the sphere.

[2]

(b) Fig. 1.2 shows two positively charged particles **A** and **B**.

STEMUP.CO.UK

Fig. 1.2

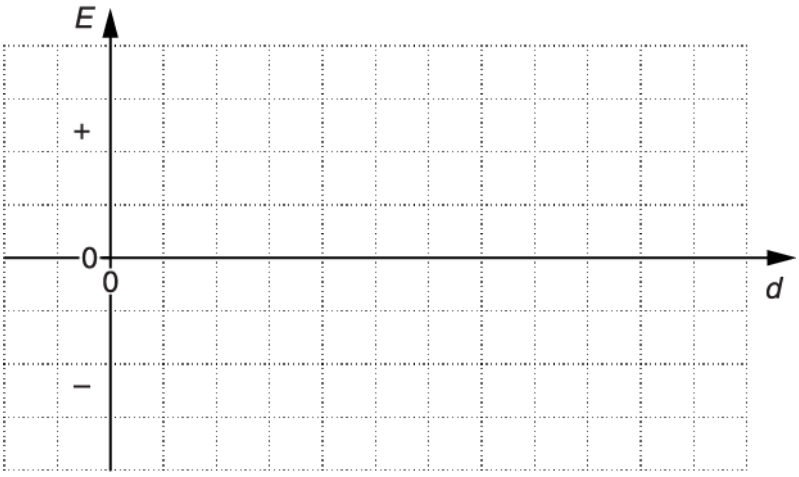

Fig. 1.3

At point **X**, the magnitude of the **resultant** electric field strength due to the particles **A** and **B** is zero.

(i) State, with a reason, which of the two particles has a charge of greater magnitude.

---

[1]

(ii) On Fig. 1.3 sketch the variation of the resultant electric field strength *E* with distance *d* from the particle **A**.

[3]

STEMUP.CO.UK

(c) Fig. 1.4 shows a stationary positively charged particle.

Fig. 1.4

This particle creates both electric and gravitational fields in the space around it. Explain why the **ratio** of the electric field strength E to the gravitational field strength g at any point around this charge is independent of its distance from the particle.

---[1]

STEMUP.CO.UK

2 Fig. 2.1 shows the circular path described by a helium nucleus in a region of uniform magnetic field in a vacuum.

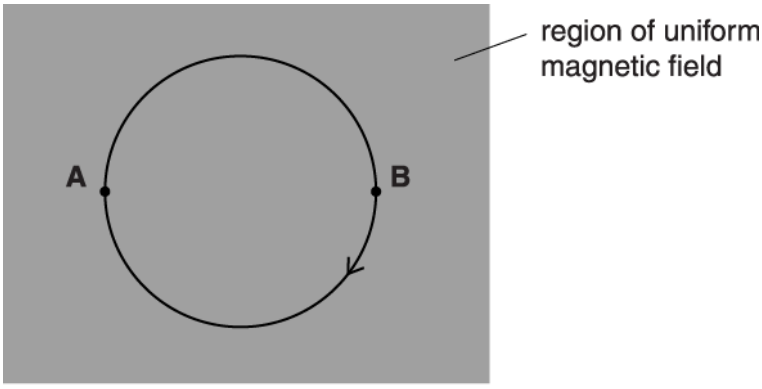

Fig. 2.1

The direction of the magnetic field is perpendicular to the plane of the paper. The magnetic flux density of the magnetic field is 0.20 mT. The radius of the circular path is 15 cm. The helium nucleus has charge + 3.2×10^{-19} C and mass 6.6×10^{-27} kg.

A uniform electric field is applied in the region shaded in Fig. 2.1. The direction of this electric field is from **left** to **right**. Describe the path now followed by the helium nucleus in the electric and magnetic fields.

---

[2]

STEMUP.CO.UK

3 For a fusion reaction to occur the separation between the deuterium and tritium nuclei must be less than 10^{-14} m. This means that the average kinetic energy of these hydrogen nuclei needs to be about 70 keV. The energy released by the fusion reaction is 18 MeV.

(i) Calculate the repulsive electrical force between the deuterium and tritium nuclei at a separation of 10^{-14} m.

force = _____ N **[2]**

(ii) Assume that a mixture of these hydrogen nuclei behaves as an ideal gas.

Estimate the temperature of the mixture of nuclei required for this fusion reaction.

temperature = _____ K **[3]**

(iii) In practice, fusion occurs at a much lower temperature. Suggest a reason why.

_____

_____

_____

_____ **[1]**

(iv) Calculate the change in mass in a single fusion reaction.

STEMUP.CO.UK

change in mass = _____ kg **[2]**

(v) Fig. 3.1 shows the variation of probability of fusion reaction with temperature *T* for deuterium and tritium and for deuterium and helium.

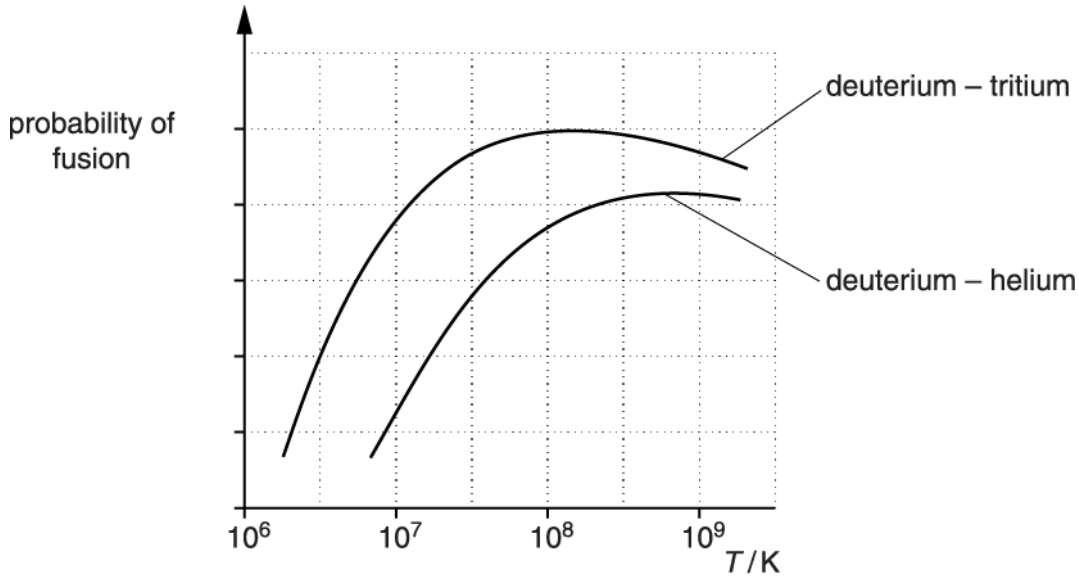

Fig. 3.1

Suggest why the probability of reaction at a given temperature is smaller for deuterium and helium.

_____

_____

_____

_____

_____

_____ **[2]**

STEMUP.CO.UK

4(a) An electric field always exists around a charged particle.

Explain what is meant by an *electric field*.

---

[1]

(b) State **one** difference and **one** similarity between the electric field of a point charge and the gravitational field of a point mass.

difference ---

---

similarity ---

---

[2]

STEMUP.CO.UK

(c) Fig. 1.1 shows the uniform electric field between two vertical parallel plates **A** and **B**.

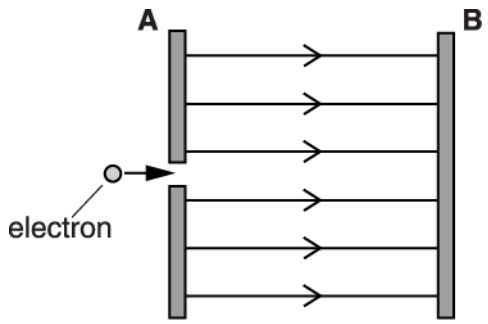

Fig. 1.1

The potential difference between the plates is 6 V. An electron of kinetic energy 4 eV is fired in a direction parallel to the electric field through a tiny hole in plate **A**.

Describe and explain the subsequent motion of the electron in the space between **A** and **B**. The weight of the electron has negligible effect on its motion between the plates.

---[3]

STEMUP.CO.UK

(d) Two different minerals acquire opposite charges when they are crushed into tiny particles. These oppositely charged mineral particles fall from a conveyor belt through the uniform electric field between two vertical parallel plates, as shown in Fig. 1.2.

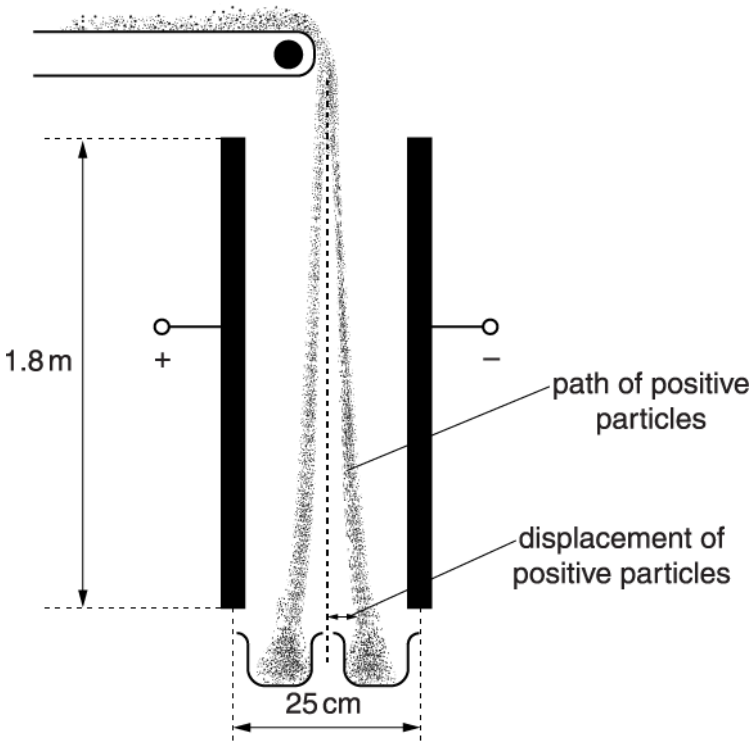

Fig. 1.2

The potential difference across the plates is 60 kV. The separation between the plates is 25 cm and each plate has length 1.8 m. The mineral particles fall through the air between the plates with a terminal velocity of 1.2 ms^{-1}. Each mineral particle has a charge of magnitude 1.5×10^{-13} C and a mass of 8.0×10^{-7} kg.

(i) Calculate the horizontal electric force experienced by a positively charged mineral particle as it falls between the plates.

force = _____ N **[2]**

(ii) Calculate the horizontal displacement of a positively charged mineral particle after a 1.8 m fall through the electric field of the plates. Ignore any horizontal drag forces due to air.

STEMUP.CO.UK

displacement = _____ m **[3]**

STEMUP.CO.UK

5 Fig. 5.1 shows an alpha-particle ($^{4}_{2}He$) of kinetic energy 8.0 MeV moving directly towards a nucleus of aluminium-27 ($^{27}_{13}Al$), initially at rest.

Fig. 5.1

(i) The alpha-particle comes to rest instantaneously a short distance away from the aluminium nucleus. It then reverses its direction of travel. Describe and explain the motion of the aluminium nucleus at the instant the alpha-particle is at rest.

_____

_____

_____

_____

_____ **[2]**

(ii) Calculate the initial speed of the alpha-particle.

mass of alpha-particle = 6.6×10^{-27} kg

speed = _____ ms^{-1} **[2]**

(iii) The electric force experienced by the alpha-particle when it is close to the aluminium nucleus is 270 N. Calculate the separation *r* between the alpha-particle and the aluminium nucleus when the alpha-particle

STEMUP.CO.UK

experiences this force.

r = _____ m **[3]**

(iv) Consider the situation where the alpha-particle travels much closer to the aluminium nucleus than in **(b)(iii)**.

Discuss how the strong nuclear force may affect the resultant force on the alpha-particle.

_____

_____

_____

_____ **[2]**

6 The electric potential is -1.2×10^{-4} J C^{-1} at a point 1.2×10^{-5} m from an isolated electron.

An α-particle $^{4}_{2}$He passes through this point.

What is the magnitude of the electric potential at the mid-point between the α-particle and the electron at this instant?

A -7.2×10^{-4} J C^{-1}
B $+2.4 \times 10^{-4}$ J C^{-1}
C $+4.8 \times 10^{-4}$ J C^{-1}
D $+7.2 \times 10^{-4}$ J C^{-1}

Your answer ☐

[1]

STEMUP.CO.UK

7(a) Describe the similarities and the differences between the gravitational field of a point mass and the electric field of a point charge.

---[3]

STEMUP.CO.UK

(b) **Fig. 21.1** shows two identical negatively charged conducting spheres.

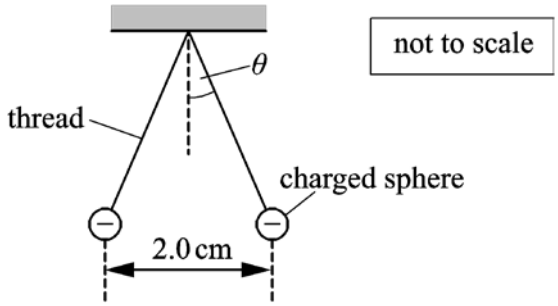

Fig. 21.1

The spheres are tiny and each is suspended from a nylon thread. Each sphere has mass 6.0×10^{-5} kg and charge -4.0×10^{-9} C. The separation between the centres of the spheres is 2.0 cm.

(i) Explain why the spheres are separated as shown in **Fig. 21.1**.

_____

_____

_____ **[2]**

(ii) Calculate the angle θ made by each thread with the vertical.

θ = _____ ° **[4]**

STEMUP.CO.UK

(c) **Fig. 21.2** shows two parallel vertical metal plates connected to a battery.

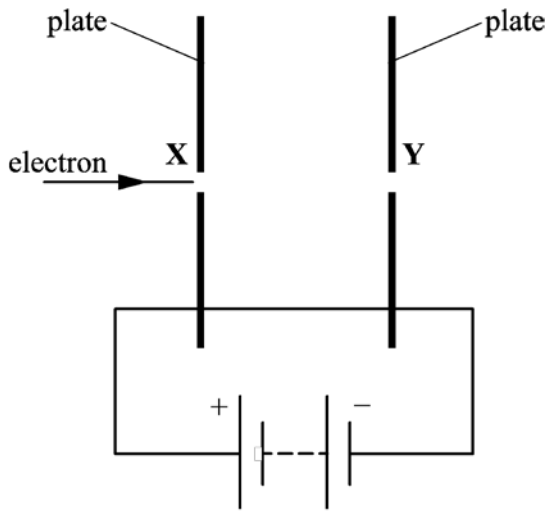

Fig. 21.2

The plates are placed in a vacuum and have a separation of 1.2 cm. The uniform electric field strength between the plates is 1500 V m^{-1}. An electron travels through holes **X** and **Y** in the plates. The electron has a horizontal velocity of 5.0×10^6 m s^{-1} when it enters hole **X**.

(i) Draw five lines on **Fig. 21.2** to represent the electric field between the parallel plates.

[2]

(ii) Calculate the final speed of the electron as it leaves hole **Y**.

speed = _____ m s^{-1} **[3]**

STEMUP.CO.UK

8 A capacitor consists of two parallel plates separated by air. The capacitor is connected across a d.c. supply. The charged capacitor is then disconnected and the separation between the plates is doubled.

Which statement is correct about the charge stored by the capacitor?

A The charge is the same.
B The charge doubles.
C The charge halves.
D The charge quarters.

Your answer ☐

[1]

STEMUP.CO.UK

9(a) A positively charged particle is travelling in a uniform field.

Fig. 21.1 shows the particle travelling at right angles to the direction of the field.

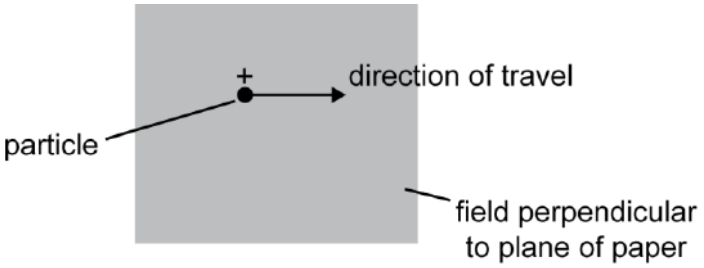

Fig. 21.1

Describe the motion of the particle in terms of the force it experiences when the field is

(i) a magnetic field

---[2]

(ii) an electric field.

---[2]

(b) Fig. 21.2 shows a uniformly charged sphere of radius *R*.

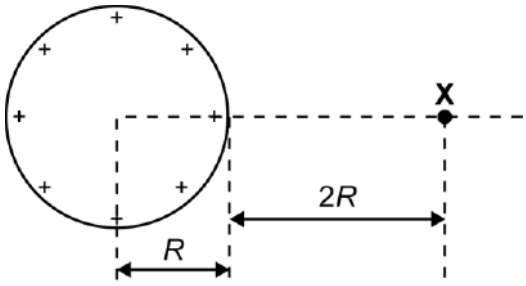

Fig. 21.2

The electric potential at point **X** is +1800 V. Point **X** is at a distance of 2*R* from the **surface** of the sphere.

STEMUP.CO.UK

(i) Calculate the electric potential V at the surface of the sphere.

V = _____ V **[2]**

(ii) The radius of the sphere is 4.0 cm.

Calculate

1 the surface charge Q on the sphere

Q = _____ C **[2]**

2 the electric field strength E at the surface of the sphere.

E = _____ N C^{-1} **[2]**

STEMUP.CO.UK

(c) Fig. 21.3 shows two particles with the same charge but of opposite sign.

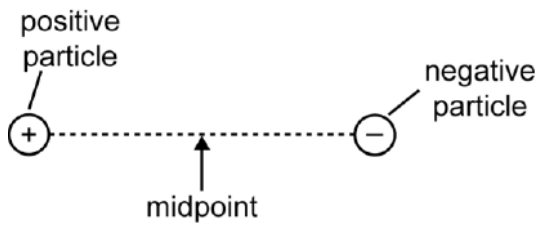

Fig. 21.3

State and explain the magnitude of the electric potential at the midpoint between the particles.

---[2]

STEMUP.CO.UK

10(a) Electrons in a beam are accelerated from rest by a potential difference V between two vertical plates before entering a uniform electric field of electric field strength E between two horizontal parallel plates, a distance $2d$ apart.

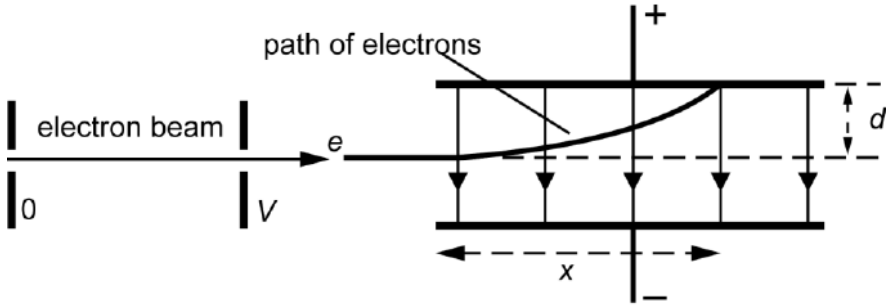

Fig. 2.1

The path of the electrons is shown in Fig. 2.1. The electron beam travels a horizontal distance x parallel to the plates before hitting the top plate. The beam has been deflected through a vertical distance d.

Show that x is related to V by the equation

$$x^2 = \frac{4\,d\,V}{E}.$$

[5]

(b) For different values of the accelerating p.d. V, the horizontal distance x is recorded. A table of results is shown with a third column giving values of x^2 including the absolute uncertainties.

V / V	x / cm	x^2 / cm^2
500	3.3 ± 0.1	10.9 ± 0.7
600	3.6 ± 0.1	13.0 ± 0.7
700	3.9 ± 0.1	15.2 ± 0.8
800	4.2 ± 0.1	17.6 ± 0.8
900	4.5 ± 0.1	20.3 ± 0.9
1000	4.7 ± 0.1	

© OCR 2022. You may photocopy this page.

Created in ExamBuilder

STEMUP.CO.UK

(i) Complete the missing value in the table, including the absolute uncertainty.

[1]

(ii) Fig. 2.2 shows the axes for a graph of x^2 on the *y*-axis against *V* on the *x*-axis. The first four points have been plotted including error bars for x^2. Use data from the table to complete the graph.

[2]

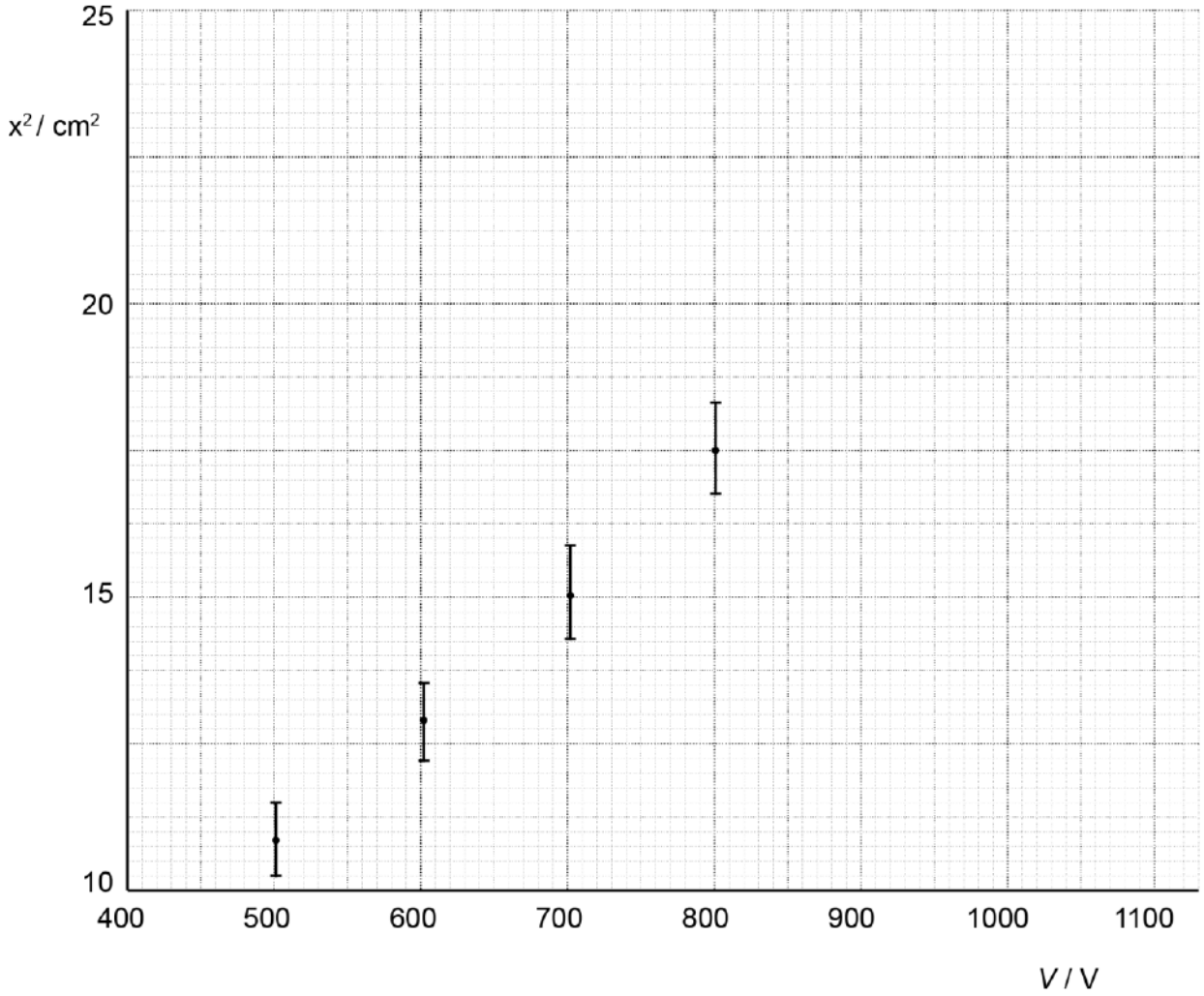

Fig. 2.2

(iii) The separation of the horizontal plates is 4.0 ± 0.1 cm.
Use the graph to determine a value for E. Include the absolute uncertainty and an appropriate unit in your answer

E = _____ ± _____ unit_____ **[4]**

STEMUP.CO.UK

11(a) At a distance r from the centre of a radioactive nucleus the electric field strength is E.

Fig. 2.2 shows the graph of the electric field strength E against $\frac{1}{r^2}$.

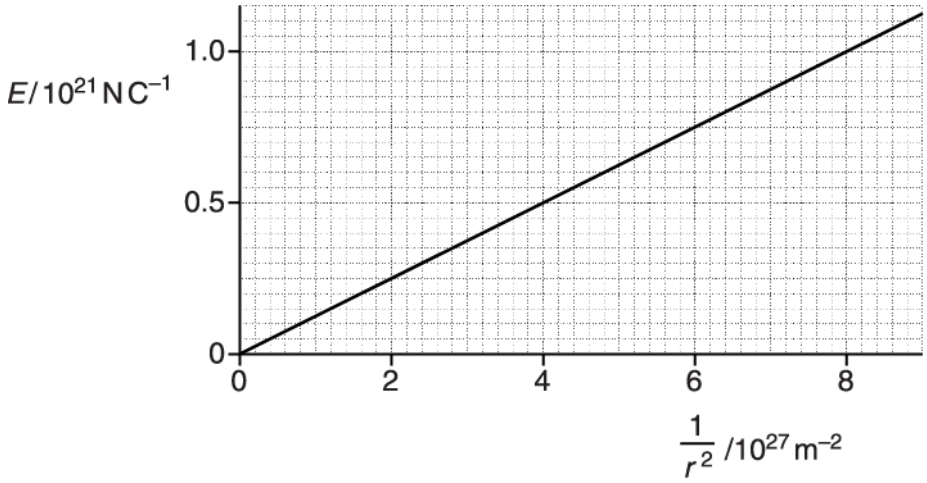

Fig. 2.2

(i) The electric field strength is given by the equation $E = \frac{Q}{4\pi\varepsilon_0 r^2}$.

Determine the gradient of the line and hence calculate the charge on the nucleus.

charge = _____ C **[2]**

(ii) The radioactive nucleus emits an alpha particle.
State the change, if any, to the graph shown in Fig. 2.2 for the resultant (daughter) nucleus. Explain your answer.

_____

_____

_____

_____ **[2]**

STEMUP.CO.UK

(b) A negatively charged droplet of oil is held **stationary** between two horizontal plates.

The potential difference between the plates is 1.50 kV. Fig. 2.3 shows the two forces acting on this charged droplet.

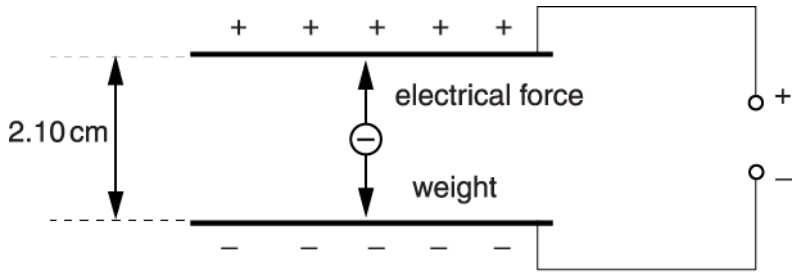

Fig. 2.3

The droplet is spherical and has a radius of 1.27×10^{-6} m. The density of oil is 950 kg m^{-3}.

The separation between the plates is 2.10 cm.

(i) Show that the magnitude of the charge on the droplet is about 1.1×10^{-18} C.

[3]

(ii) Calculate the number of electrons causing the charge on the droplet.

number of electrons = _____ **[1]**

STEMUP.CO.UK

12 An electron at point **P** experiences an electric force of magnitude 1.8 μN due to the positive nucleus.

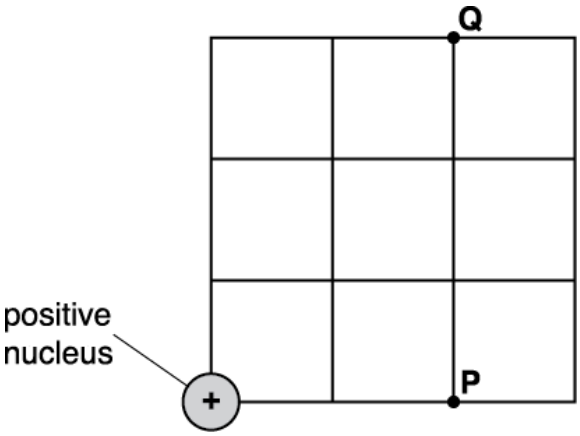

What is the magnitude of the force experienced by the same electron when it is at point **Q**?

A 0.28 μN
B 0.55 μN
C 1.0 μN
D 1.8 μN

Your answer

[1]

STEMUP.CO.UK

13 Fig. 20.1 shows a capacitor connected to a power supply.

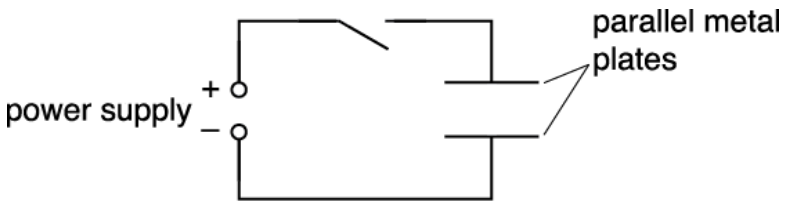

Fig. 20.1

The capacitor consists of two parallel metal plates separated by air.
The switch is closed to charge the capacitor.
The switch is then opened and the separation between the charged plates is **doubled**.
State and explain what happens to the energy stored by the capacitor.

---[3]

STEMUP.CO.UK

14(a) Fig. 21.1 shows two oppositely charged ions to the left of a point **X**.

Fig. 21.1

The separation between the centres of the ions is 3.0×10^{-10} m. Each ion has charge of magnitude 1.6×10^{-19} C.

(i) Explain why the direction of the **resultant** electric field strength at point **X** is to the left.

_____

_____

_____

_____ **[2]**

(ii) Calculate the minimum energy in eV required to completely separate the ions.

energy = _____ eV **[3]**

(b) A **proton** travels from point **P** to point **Q** in a uniform electric field as shown in Fig. 21.2.

STEMUP.CO.UK

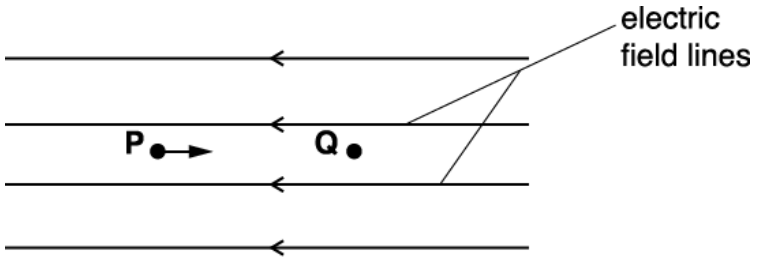

Fig. 21.2

The velocity of the proton at **P** is 7.2×10^6 m s^{-1} and the velocity at **Q** is 2.4×10^6 m s^{-1}. The distance between **P** and **Q** is 1.2 cm.

Calculate

(i) the magnitude of the deceleration of the proton

deceleration = _____ m s^{-2} **[2]**

(ii) the electric field strength *E*.

E = _____ N C^{-1} **[2]**

STEMUP.CO.UK

15 A nucleus of hydrogen-3 ($^{3}_{1}H$) is unstable and it emits a beta-minus particle (electron).

The emitted beta-minus particle enters a region of uniform magnetic field.
Fig. 22.1 shows the path of the particle **before** it enters the magnetic field.

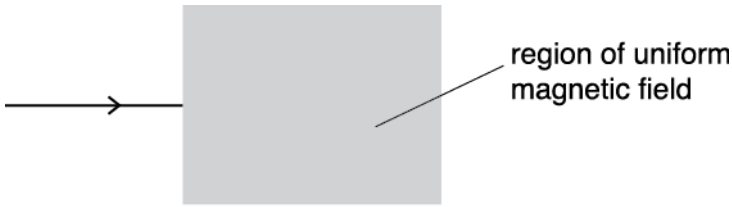

Fig. 22.1

The direction of the magnetic field is into the plane of the paper.
Describe and explain the path of the particle in the magnetic field.

---[2]

STEMUP.CO.UK

16 Fig. 3.1 shows a simple representation of a hydrogen iodide molecule. It consists of two ions $^{1}_{1}H^{+}$ and $^{127}_{53}I^{-}$, held together by electric forces.

Fig. 3.1

(i) Draw on Fig. 3.1 a minimum of five lines to show the electric field pattern between the ions.

[2]

(ii) The charge on each ion has a magnitude *e* of 1.6×10^{-19} C. The ions are to be treated as point charges 5.0×10^{-10} m apart. Calculate the magnitude of the resultant electric field strength *E* at the **mid-point** between the ions.

E = _____ N C^{-1} **[4]**

STEMUP.CO.UK

17 Two isolated parallel capacitor plates have an equal and opposite charge.
The separation between the plates is doubled.
The charge on each plate remains the same but the potential difference between the plates doubles.

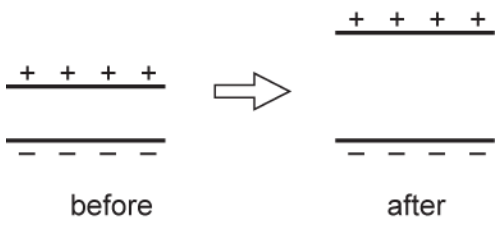

Which statement is correct?

A The capacitance of the capacitor doubles.

B The energy stored by the capacitor is halved.

C The permittivity of free space doubles.

D The electric field strength between the plates remains the same.

Your answer [1]

STEMUP.CO.UK

18(a)

Fig. 20.1 shows a positively charged metal sphere and a negatively charged metal plate.

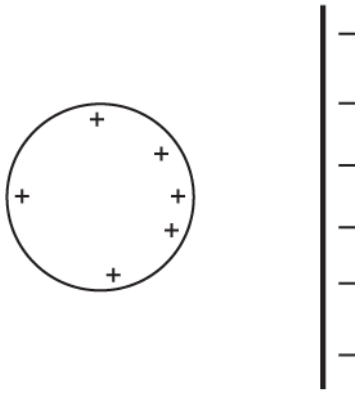

Fig. 20.1

On Fig. 20.1, draw a minimum of **five** electric field lines to show the field pattern between the sphere and the plate.

[2]

(b) Define *electric potential* at a point in space.

---

[1]

(c) A metal sphere is given a positive charge by connecting its surface briefly to the positive terminal of a power supply. The electric potential at the surface of the sphere is + 5.0 kV. The sphere has radius 1.5 cm.

(i) Show that the charge Q on the surface of the sphere is 8.3×10^{-9} C.

[2]

STEMUP.CO.UK

(ii) Fig. 20.2 shows the charged sphere from **(i)** suspended from a nylon thread and placed between two oppositely charged vertical plates.

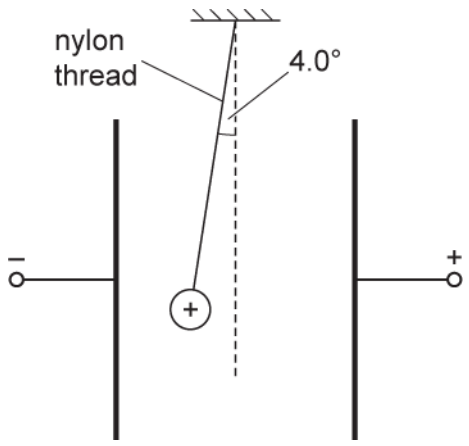

Fig. 20.2 (not to scale)

The weight of the sphere is 1.7×10^{-2} N. The string makes an angle of 4.0° with the vertical.

1 Show that the electric force on the charged sphere is 1.2×10^{-3} N.

[1]

2 Calculate the uniform electric field strength *E* between the parallel plates.

E = _____ N C^{-1} **[2]**

STEMUP.CO.UK

19(a)

A capacitor of capacitance 7.2 pF consists of two parallel metal plates separated by an insulator of thickness 1.2 mm. The area of overlap between the plates is 4.0×10^{-4} m^2. Calculate the permittivity of the insulator between the capacitor plates.

permittivity = _____ F m^{-1} **[2]**

STEMUP.CO.UK

(b) Fig. 21 shows a circuit.

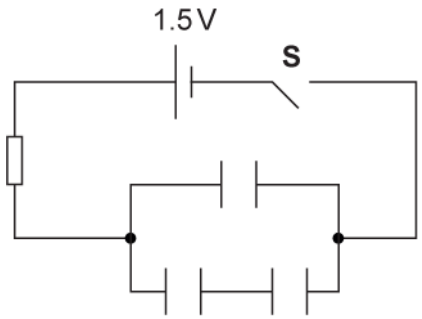

Fig. 21

The capacitance of each capacitor is 1000 μF. The resistance of the resistor is 10 kΩ. The cell has e.m.f. 1.5 V and negligible internal resistance.

(i) Calculate the total capacitance *C* in the circuit.

C = _____ μF **[2]**

(ii) The switch **S** is closed at time *t* = 0. There is zero potential difference across the capacitors at *t* = 0. Calculate the potential difference *V* across the resistor at time *t* = 12 s.

V = _____ V **[2]**

© OCR 2022. You may photocopy this page.

Created in ExamBuilder

STEMUP.CO.UK

20 A small thin rectangular slice of semiconducting material has width a and thickness b and carries a current I. The current is due to the movement of electrons. Each electron has charge $-e$ and mean drift velocity v.
A uniform magnetic field of flux density B is perpendicular to the direction of the current and the top face of the slice as shown in Fig. 2.1.

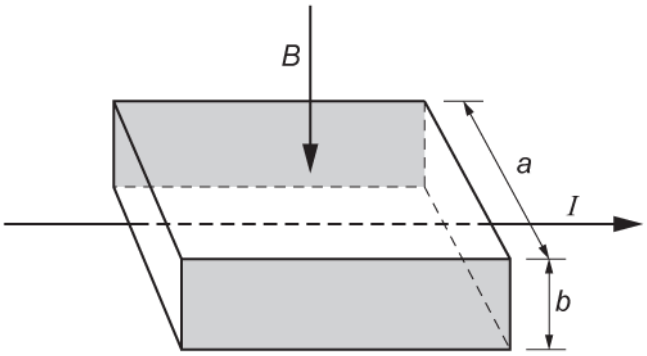

Fig. 2.1

As soon as the current is switched on, the moving electrons in the current are forced towards the shaded rear face of the slice where they are stored. This causes the shaded faces to act like charged parallel plates. Each electron in the current now experiences both electric and magnetic forces. The resultant force on each electron is now zero.

Write the expressions for the electric and magnetic forces acting on each electron and use these to show that the magnitude of the potential difference V between the shaded faces is given by

$$V = Bva.$$

[3]

STEMUP.CO.UK

21 An isolated metal sphere is charged using a power supply.

Which single quantity can be used to determine the capacitance of the sphere?

A The diameter of the sphere.
B The charge on the sphere.
C The resistance of the metal.
D The e.m.f. of the power supply.

Your answer [1]

22 An electron is released at a distance r from the surface of a positively charged sphere. It is attracted towards the centre of the sphere and moves until it touches the surface.

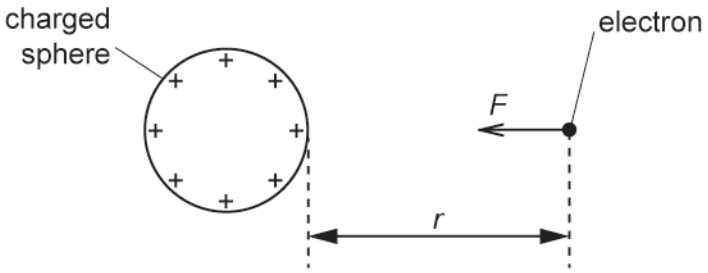

Which of the following statements is/are correct?

1 The area under the F against r graph is equal to work done on the electron.

2 The electric field strength E at distance r is equal to $\frac{F}{1.6 \times 10^{-19}}$.

3 The work done on the electron is equal to $F \times r$.

A Only 1
B Only 1 and 2
C Only 1 and 3
D 1, 2 and 3

Your answer [1]

STEMUP.CO.UK

23 A student wishes to determine the permittivity ε of paper using a capacitor made in the laboratory.

The capacitor consists of two large parallel aluminium plates separated by a very thin sheet of paper.

The capacitor is initially charged to a potential difference V_0 using a battery. The capacitor is then discharged through a fixed resistor of resistance 1.0 MΩ.

The potential difference V across the capacitor after a time t is recorded by a data-logger. The student uses the data to draw the $\ln V$ against t graph shown in Fig. 22.

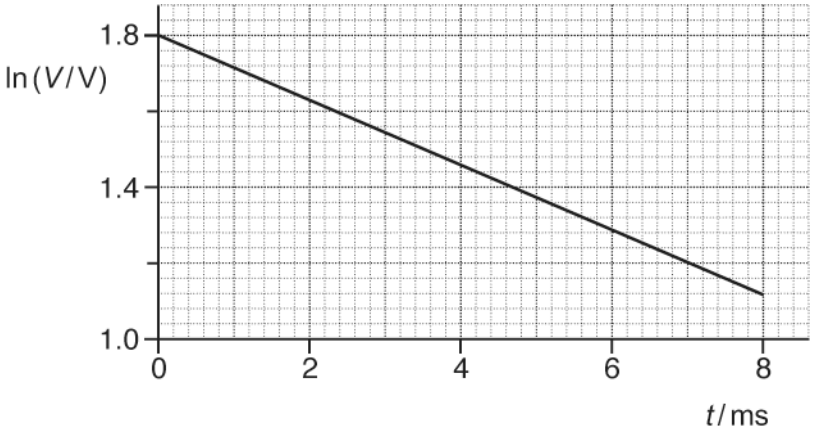

Fig. 22

Use Fig. 22 to determine the capacitance C of the capacitor. Describe how the student can then use this value of C to determine a value for ε.
In your description, mention any additional measurements required on the capacitor.

STEMUP.CO.UK

[6]

STEMUP.CO.UK

A proton with kinetic energy 0.52 MeV is travelling directly towards a stationary nucleus of cobalt-59 ($^{59}_{27}Co$) in a head-on collision.

(i) Explain what happens to the electric potential energy of the proton-nucleus system.

--- [1]

(ii) Calculate the **minimum** distance *R* between the proton and cobalt nucleus.

R = ---------- m **[3]**

STEMUP.CO.UK

The nuclear reaction below shows how the isotope of fluorine-18 ($^{18}_{9}F$) is made from the isotope of oxygen-18 ($^{18}_{8}O$).

$$^{18}_{8}O + ^{1}_{1}p \rightarrow ^{18}_{9}F + ^{1}_{0}n + \gamma$$

The oxygen-18 nucleus is **stationary** and the proton has kinetic energy of 0.25×10^{-11} J.

The binding energy of the $^{18}_{8}O$ nucleus is 2.24×10^{-11} J and the binding energy of the $^{18}_{9}F$ nucleus is 2.20×10^{-11} J. The proton and the neutron have zero binding energy.

(i) Explain why a high-speed proton is necessary to trigger the nuclear reaction shown above.

--- **[2]**

(ii) Estimate the minimum wavelength λ of the gamma ray photon (γ).

λ = ---------- m **[3]**

STEMUP.CO.UK

(iii) Fluorine-18 is a positron emitter.

Name a medical imaging technique that uses fluorine-18 and state one benefit of the technique.

---[2]

26 Which law indicates that charge is conserved?

A Lenz's law

B Coulomb's law

C Kirchhoff's first law

D Faraday's law of electromagnetic induction

Your answer [1]

STEMUP.CO.UK

27 The diagram below shows two uniformly charged spheres separated by a large distance *z*.

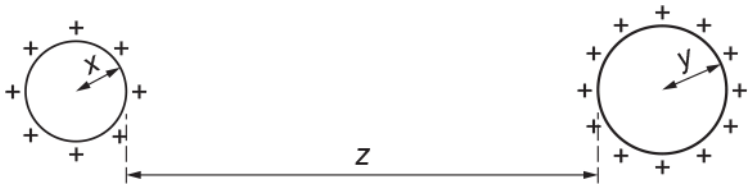

The radius of the small sphere is x and the radius of the large sphere is *y*.

Which is the correct distance to use when determining the electric force between the charged spheres?

A z

B $x + z$

C $y + z$

D $x + y + z$

Your answer [1]

28 The electric field strength at a distance of 2.0×10^{-8} m from a nucleus is 3.3×10^{8} N C^{-1}.

What is the charge on the nucleus?

A 1.6×10^{-19} C

B 1.5×10^{-17} C

C 7.3×10^{-10} C

D 3.8×10^{-9} C

Your answer [1]

© OCR 2022. You may photocopy this page.

Created in ExamBuilder

STEMUP.CO.UK

29(a) Fig. 22.1 shows two horizontal metal plates in a vacuum.

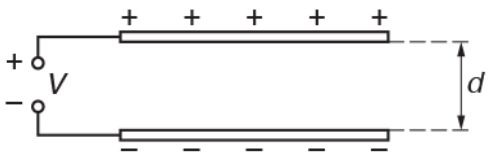

Fig. 22.1

The plates are connected to a power supply. The potential difference V between the plates is constant. The magnitude of the charge on each plate is Q. The separation between the plates is d.

Fig. 22.2 shows the variation with d of the charge Q on the positive plate.

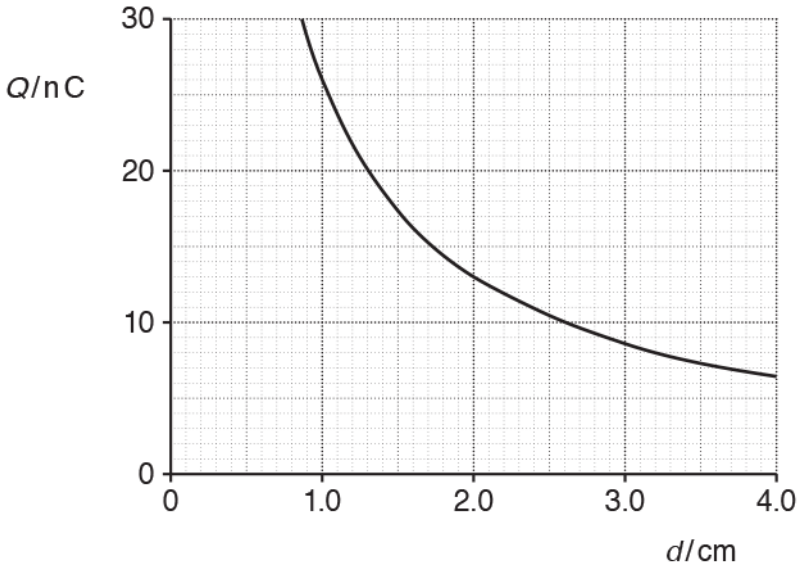

Fig. 22.2

(i) Use Fig. 22.2 to propose and carry out a test to show that Q is inversely proportional to d.

Test proposed:

STEMUP.CO.UK

Working:

[2]

(ii) Use capacitor equations to show that Q is inversely proportional to d.

[2]

STEMUP.CO.UK

(b) Fig. 22.3 shows a negatively charged oil drop between two oppositely charged horizontal plates in a vacuum.

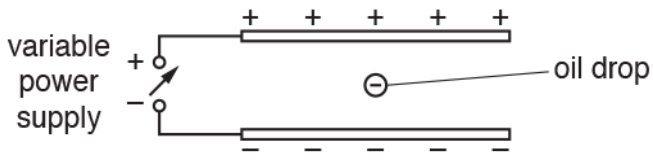

Fig. 22.3

The plates are fixed and connected to a variable power supply. The weight of the oil drop is 1.8×10^{-14} N.

(i) The power supply is adjusted so that the potential difference between the plates is 200 V when the oil drop becomes **stationary**.

State the magnitude of the vertical electric force F_E acting on the charged oil drop.

F_E = ...N **[1]**

(ii) The potential difference between the plates is now increased to 600 V.
The oil drop accelerates upwards.

Calculate the acceleration *a* of the oil drop.

a = ...ms^{-2} **[3]**

STEMUP.CO.UK

(c) * Fig. 22.4 shows an arrangement used by a student to investigate the forces experienced by a small length of charged gold foil placed in a uniform electric field.

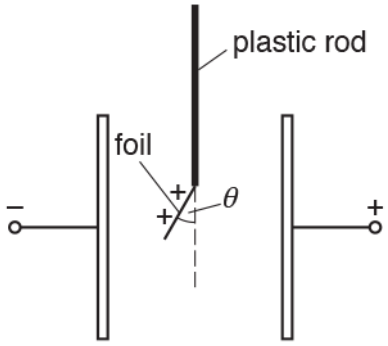

Fig. 22.4

The two vertical metal plates are connected to a high-voltage supply.

The foil is given a positive charge by briefly touching it to the positive plate.

The angle θ made with the vertical by the foil in the electric field is given by the expression $\tan\theta = \frac{qE}{W}$

where q is the charge on the foil, E is the electric field strength between the plates and W is the weight of the foil.

The angle θ can be determined by taking photographs with the camera of a mobile phone.

Describe how the student can safely conduct an experiment to investigate the relationship between θ and E. Identify any variables that must be controlled.

STEMUP.CO.UK

[6]

STEMUP.CO.UK

30 A beam of α-particles is incident on a thin gold foil. Most α-particles pass straight through the foil. A few are deflected by gold nuclei.

The diagram shows the path of one α-particle which passes close to a gold nucleus **N** in the foil. The α-particle is deflected through an angle of 60° as it travels from **A** to **B**.

P marks its position of closest approach to the gold nucleus.

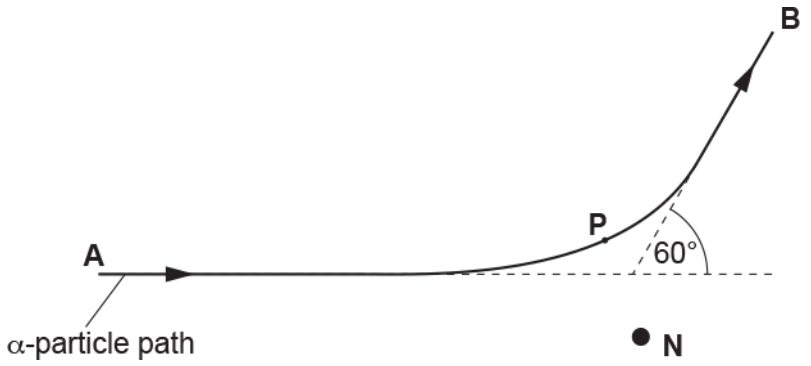

Another α-particle in the beam is deflected by the same gold nucleus **N** through an angle of 30°.

Sketch its path onto the diagram above. **[2]**

STEMUP.CO.UK

31 A spherical metal dome shown below is charged to a potential of –12 kV.

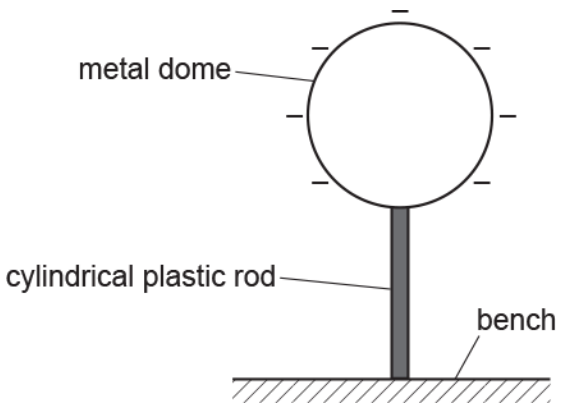

The dome is supported by a cylindrical plastic rod. The radius of the dome is 0.19 m.

(i) Show that the magnitude of the total charge Q on the dome is 2.5×10^{-7} C.

[2]

(ii) The dome discharges slowly through the plastic rod.
It takes 78 hours for the dome to completely discharge.

1 Show that the mean current I in the plastic rod is about 9×10^{-13} A.

[2]

2 The average potential difference across the plastic rod during discharge is 6000 V.
The rod has cross-sectional area 1.1×10^{-4} m^2 and length 0.38 m.

Calculate the resistivity ρ of the plastic.

ρ = ... Ωm [3]

STEMUP.CO.UK

32 A beam of α-particles is incident on a thin gold foil. Most α-particles pass straight through the foil. A few are deflected by gold nuclei.

The diagram shows the path of one α-particle which passes close to a gold nucleus **N** in the foil. The α-particle is deflected through an angle of 60° as it travels from **A** to **B**.

P marks its position of closest approach to the gold nucleus.

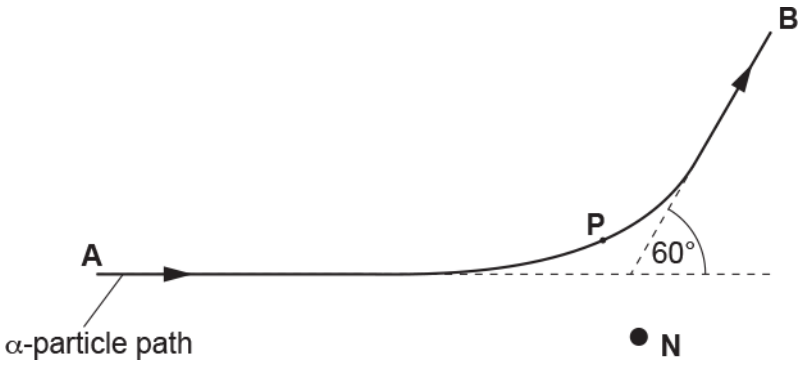

The distance between **P** and **N** is 6.8×10^{-14} m.

Calculate the magnitude of the electrostatic force *F* between the α-particle $({}^{4}_{2}He)$ and the gold nucleus $({}^{197}_{79}Au)$

when the α-particle is at **P**.

F = ... N **[4]**

STEMUP.CO.UK

33(a) A ball coated with conducting paint has weight 0.030 N and radius 1.0 cm. The ball is suspended from an insulating thread. The distance between the pivot and the centre of the ball is 120 cm.

The ball is placed between two vertical metal plates. The separation between the plates is 8.0 cm. The plates are connected to a 4.0 kV power supply.

The ball receives a positive charge of 9.0 nC when it is made to touch the positive plate. It then repels from the positive plate and hangs in equilibrium at a displacement *x* from the vertical, as shown below. The diagram is **not** drawn to scale.

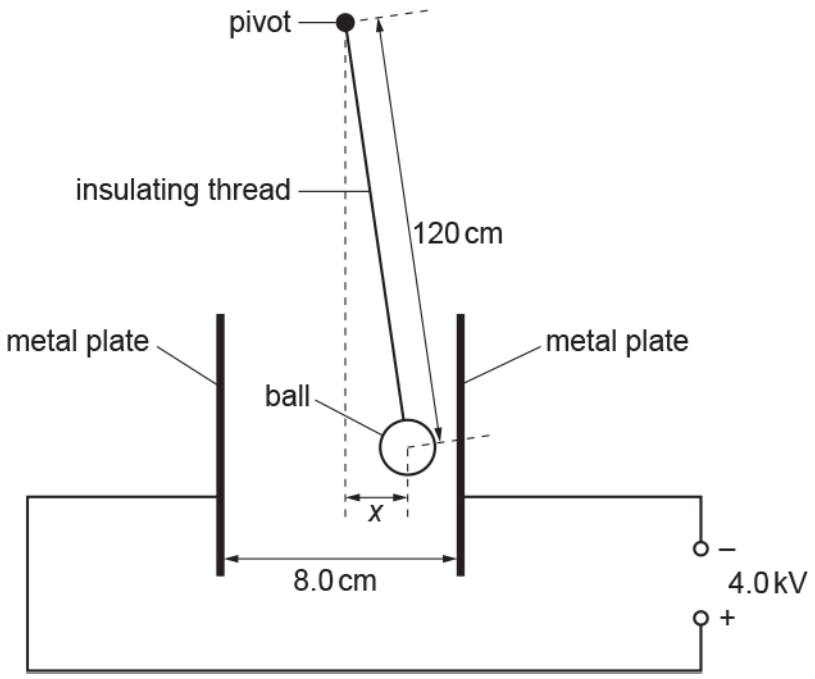

(i) Show that the electric force acting on the charged ball is 4.5×10^{-4} N.

[2]

(ii) Draw, on the diagram above, arrows which represent the **three** forces acting on the ball.
Label each arrow with the name of the force it represents.

STEMUP.CO.UK

[2]

(iii) By taking moments about the pivot, or otherwise, show that x = 1.8 cm.

[2]

STEMUP.CO.UK

(b) The ball is still positively charged.

The plates are now moved slowly towards each other whilst still connected to the 4.0 kV power supply. The plates are stopped when the separation is 5.0 cm.

Explain the effect that this has on the deflection of the ball and explain why the ball eventually starts to oscillate between the plates.

---

[4]

STEMUP.CO.UK

(c) When the ball oscillates between the plates, the current in the external circuit is 3.2×10^{-8} A.

A charge of 9.0 nC moves across the gap between the plates each time the ball makes one complete oscillation.

Calculate the frequency *f* of the oscillations of the ball.

f = ... Hz **[2]**

34 The electric potential at a distance *R* from the centre of a charge +*Q* is + 40 V.

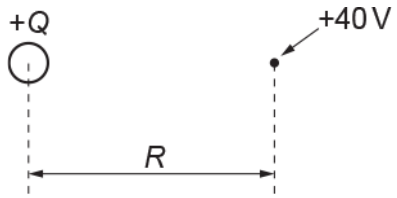

What is the potential at the point **P** for the arrangement of the charges +*Q* and –1.5*Q* as shown below?

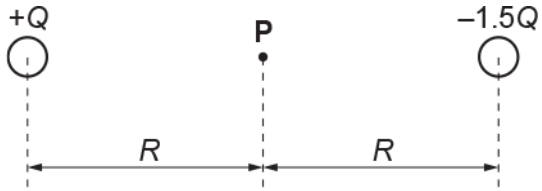

A – 20 V
B – 60 V
C + 80 V
D + 100 V

Your answer ☐ **[1]**

STEMUP.CO.UK

35 The diagram below shows the arrangement of the 3 protons inside the nucleus of lithium-6 ($^{6}_{3}Li$).

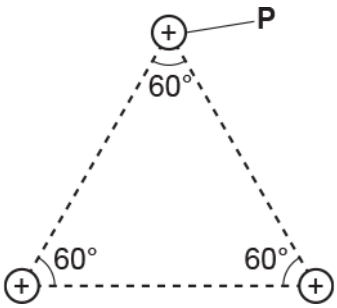

The separation between each proton is about 1.0×10^{-15} m.

(i) Calculate the magnitude of the repulsive electric force *F* experienced by the proton **P**.

F = ... N **[4]**

(ii) On the diagram above, draw an arrow to show the direction of the electric force *F* experienced by **P**.

[1]

(iii) Explain how protons stay within the nucleus of lithium-6.

---

[2]

STEMUP.CO.UK

END OF QUESTION PAPER

STEMUP.CO.UK

Question			Answer/Indicative content	Marks	Guidance
1	a		Correct direction of the electric field. A minimum of 5 field lines shown. Correct shape of field lines.	B1 B1	 Expect a minimum of 3 field lines to be normal (by eye) to the plate – ignore the angles made by the field lines at the sphere. Also there must not be any field lines within the sphere. Examiner's Comments Most candidates managed to secure one mark for the correct direction of the electric field between the plate and the sphere. Generally, the quality of the electric field patterns was poor, with field lines frequently not being normal at the surfaces of the sphere and the plate. A small number of candidates either drew straight field lines between the sphere and the plate or had field lines within the sphere itself. Candidates at the top-end drew perfect field patterns with most picking up the two marks.
	b	i	($E \propto Q/r^2$ and the magnitude of E is the same due to each charge **A** and **B** at **X**. Therefore) **B** has a greater charge because **X** is further away from **B**.	B1	Examiner's Comments Generally, candidates answered this question well. Many correctly identified the particle **B** as having the greater charge and then gave creditable reasoning for their choice. Many candidates, across the ability spectrum, gave excellent justification in terms of the electric field strength being inversely proportional to distance^2.
		ii	Curve showing $E = 0$ at position of **X**.	B1	**Allow** any graph, including a straight line. Tolerance for $E = 0$: ± ½ large square about **X**.
		ii	Curve showing E is positive between **A** and **X** and negative between **X** and **B** (or vice versa).	M1	**Note**: The curve must be continuous and pass through position of **X**. Ignore any curve to the right of **B** and to the left of **A**.

STEMUP.CO.UK

Question			Answer/Indicative content	Marks	Guidance
		ii	The magnitude of *E* is small close to **A** and large close to **B**.	A1	**Note**: This mark can only be scored if the previous M1 has been awarded. **Examiner's Comments** There were far too many variants of the E against d graphs; sadly most of them were incorrect. A pleasing number of candidates picked up one mark for a curve passing crossing the d-axis at the position of **X**. The remaining two marks were only secured by the very top candidates who drew a curve showing E to be positive between **A** and **X** and negative between **X** and **B** (or vice versa). This proved to a tough question, with most candidates having an attempt at sketching something.
	c		Both *E* and *g* vary with 1/distance^2. (Hence the ratio is independent of the distance.)	B1	**Allow**: $E = \frac{Q}{4\pi\varepsilon_0 r^2}$ <u>and</u> $g = \frac{GM}{r^2}$ **or** $E \propto \frac{1}{r^2}$ <u>and</u> $g \propto \frac{1}{r^2}$ **Allow** 'both are inverse square laws'. **Examiner's Comments** This was a good discriminator with many candidates giving excellent answers in terms of the inverse square law with distance for both electric and gravitational field strengths. Some candidates even went as far as to derive an expression for the ratio and showed how the r^2 terms cancel out. A small number of candidates gave incorrect reasoning for why there was no dependence on the distance, this is shown below. *g = F/m* and *E = F/Q*. Therefore *g/E = Q/m* which has no distance.
			Total	**7**	

STEMUP.CO.UK

Question			Answer/Indicative content	Marks	Guidance
2			The helium nucleus moves to the right. The path is a clockwise curve / looped (in the plane of the paper).	B1 B1	**Not** if the path is shown as a straight line. **Allow** 2 marks for clockwise curve / loop to the right. **Allow** 1 mark for a sketch showing an 'upward curve to the right' **Examiner's Comments** This proved to be a very testing question even for the top-end candidates. Many candidates failed to realise that the electric field would cause the helium nucleus to move towards the right. The path of the particle in the fields would be a combination of this translational motion to the right and a clockwise circular motion due to the effect of the magnetic field. The most popular incorrect answers were *'oval shaped path'* and *'helium particle spiralling out of the plane of the paper'*. It was good to see the odd correct path sketched with the correct supportive text. Examiners gave full credit for a clockwise looped path.
			Total	**2**	

© OCR 2022. You may photocopy this page.

Created in ExamBuilder

STEMUP.CO.UK

Question			Answer/Indicative content	Marks	Guidance
3		i	$F = \frac{1.6\times10^{-19}\times1.6\times10^{-19}}{4\pi\varepsilon_0\times(10^{-14})^2}$	C1	Not $Q = q = 1$
		i	force = 2.3 (N)	A1	Examiner's Comments Generally, candidates answered the question well and got the correct answer of 2.3 N. The equation for Coulomb's law was familiar to most candidates and the substitution of numbers was clear with fewer calculator errors. A small number of candidates used charges of 2e and 3e and consequently scored no marks.
		ii	$E = 7.0\text{x}10^4\text{x } 1.6\text{x}10^{-19}$(= 1.12x 10^{-14} J)	C1	
		ii	$(E = \frac{3}{2}kT)$; $7.0\times10^4\times1.6\times10^{-19} = \frac{3}{2}\times1.38\times10^{-23}\times T$	C1	Allow any subject. Also, allow $E \approx kT$ since it is an estimate.
		ii	temperature = 5.4 × 10^8(K)	A1	Allow 1 sf answer. Examiner's Comments The majority of the candidates scored three marks for this synoptic question requiring knowledge of electronvolts and mean kinetic energy $\frac{3}{2}kT$. The answers were, once again, well-structured and logically presented. A small number of candidates either used 70000 or 18 MeV as the mean kinetic energy; no marks were awarded for such elementary errors.
		iii	Some nuclei will be travelling faster / have greater (kinetic) energy (to overcome electrostatic repulsion and hence cause fusion).	B1	Allow the pressures are high (enough to cause fusion). Not 'nuclei get close enough'. Examiner's Comments This was a good discriminator, with top-end candidates giving perfect answers. Some even mentioned the Maxwell-Boltzmann distribution and how some of the nuclei would have kinetic energies greater than the mean kinetic energy. Descriptions were often far more complex than warranted by this one mark question. Examiners also allowed *'high pressure'* as a plausible answer.

STEMUP.CO.UK

Question			Answer/Indicative content	Marks	Guidance
		iv	($\Delta E = \Delta mc^2$); 18x 10^6x 1.6 × 10^{-19} = Δm × $(3.0 \times 10^8)^2$	C1	**Allow** any subject
		iv	change in mass = 3.2 × 10^{-29} (kg)	A1	**Allow** a maximum of 1 mark for 18MeV ± 70 keV. **Examiner's Comments** This was another high-scoring question. Most candidates used the Einstein massenergy equation and the energy of 18 MeV converted to joules to get the correct answer. Examiners gave no marks if 70 keV was used as the energy. Once again, candidates demonstrated good analytical skills.
		v	Helium (nucleus) has greater charge / more protons.	B1	
		v	The (electrostatic) repulsive force (between the deuterium and helium nuclei) is greater (hence smaller chance of fusion).	B1	Do **not** award this mark if 'helium nuclei are moving slower' is also given as the reason for smaller probability for fusion. **Examiner's Comments** Most candidates wrote a great deal but the key physics was often omitted. Only a small number of high-scoring candidates realised that the helium nucleus had greater charge. This meant a greater repulsive electrostatic force between the helium nuclei and deuterium nuclei and hence a smaller chance of fusion between helium-deuterium nuclei. The most common misconception was that *'the greater mass of helium nuclei means that they are travelling slower and hence less chance of fusion'*.
			Total	**10**	

© OCR 2022. You may photocopy this page.

Created in ExamBuilder

STEMUP.CO.UK

Question			Answer/Indicative content	Marks	Guidance
4	a		A region in which a charged particle experiences a force / acceleration	B1	**Allow**: Where a charge experiences a force **Allow**: Force per (unit positive) charge **Note**: Must have reference to charge and force/acceleration for the mark **Examiner's Comments** There were very few correct answers in this opening question, with many candidates either defining electric field **strength** or mentioning that electric fields were created by charged objects. The marking scheme was made flexible to allow a range of answers that hinted the idea that this was a region where a charged particle experiences a force. Most candidates gained a mark.
	b		Difference: Any one from • gravitational field / force is attractive (AW) • electric field / force can be either attractive or repulsive (AW) Similarity: Any one from: • Force / field (strength) inversely proportional to distance squared • Radial fields	B1 B1	**Allow**: Gravitational force is in the direction of the field / towards the mass **Note**: For the second bullet point, must have reference to both attractive and repulsive or 'towards charge' and 'away from charge' **Allow**: (Both) obey the inverse-square law (with distance) or (Both) have $F \alpha 1/r^2$ or $g \alpha 1/r^2$ and $E \alpha 1/r^2$ **Allow**: 'radius or separation' for 'distance' **Examiner's Comments** The majority of the candidates gained two marks. Most candidates were aware that gravitational force or field was always attractive and that electric force or field can either be attractive or repulsive depending on the charge creating the electric field. Most candidates wrote the similarity as either *'both obey inverse square law'* or *'both create radial fields'*.

STEMUP.CO.UK

Question			Answer/Indicative content	Marks	Guidance
	c		Any three from: • The electron is repelled by **B** / attracted by **A** / experience a force to the left • (Initially the) electron decelerates / slows down • It does not reach plate **B** / It reverses direction • When it returns to **A** it has 4 eV (of KE) • It stops 2/3 of the distance across the plates (AW)	B1 × 3	Examiner's Comments This was a discriminating question, with many of the best candidates gaining full marks. The most important point was to deduce that plate **A** was positively charged and plate **B** was negatively charged and this meant that the electron will experience a force to the left. The electron decelerated in the uniform electric field, stopped after travelling a distance equal to two-thirds the separation between the plates and then reversed direction of travel. A good number of candidates even reasoned that the electron would travel back through the hole with kinetic energy of 4.0 eV. About a third of the candidates scored no marks because they had the electron accelerating between the plates and hitting plate **B** with kinetic energy of 10 eV.
	d	i	$E = 60\text{x}10^3 \div 0.25$ / $E = 2.4 \times 10^5$ (V m^{-1})	C1	
		i	$F = 2.4 \times 10^5 \times 1.5 \times 10^{-13}$		Allow: $F = [1.5 \times 10^{-13} \times 60 \times 10^3]/0.25$ for the first C1 mark
		i	force = 3.6×10^{-8} (N)	A1	Allow: 1 mark for 7.2×10^{-8} (N); d = 12.5 cm used Examiner's Comments Most candidates scored two marks in this question. Answers were generally well-structured and prefixes correctly identified. The majority of the answers were written in scientific notation. A pleasingly number of candidates derived an expression for the force and then substituted the values. A small number of candidates used a separation of 12.5 cm to determine the electric field strength. This gave an answer of 7.2 × 10–8 N. On the basis of error-carried-forward rules, Examiners awarded one mark for this incorrect answer.
		ii	t = 1.8/1.2 (= 1.5 s) or $a = \frac{3.6\times10^{-8}}{8.0\times10^{-7}}$ (= 4.5×10^{-2} m s^{-2})	C1	Possible ecf from **(d)(i)**

© OCR 2022. You may photocopy this page.

Created in ExamBuilder

STEMUP.CO.UK

Question			Answer/Indicative content	Marks	Guidance
		ii	($s = ut + \frac{1}{2}at^2$ and $u = 0$)		
		ii	$s = \frac{1}{2} \times 4.5 \times 10^{-2} \times 1.5^2$	C1	**Note**: No ecf within calculation if $t \neq 1.8/1.2$
		ii	displacement = 5.1×10^{-2} (m)	A1	**Note**: Answer to 3 sf is 5.06×10^{-2} (m) Examiner's Comments This was a challenging question requiring synoptic knowledge of equations of motion and dynamics. Many candidates scored a mark for either calculating the horizontal acceleration of the charged particle or the time it took to fall between the parallel plates. Further success in the question hinged on how effectively the question was scrutinised. Top-end candidates effortlessly calculated the horizontal displacement to be 0.051 m. However, many candidates ignored that the charged particle was falling vertically at a constant speed and attempted to determine the time of fall using an equation of motion with 9.81 m s^{-2}. A very small number of candidates in the lower quartile attempted to use either Coulomb's law or triangle of forces to determine the displacement.
			Total	11	

© OCR 2022. You may photocopy this page.

Created in ExamBuilder

STEMUP.CO.UK

Question			Answer/Indicative content	Marks	Guidance
5		i	The aluminium nucleus has velocity / accelerates / moves to the right	B1	Allow: Moves away from the alpha particle Examiner's Comments This was another well answered question with most candidates describing and explaining the motion of the aluminium nucleus in terms of repulsive electrostatic force or conservation of momentum. A small number of candidates tried to explain the fate of the aluminium nucleus in terms of the strong nuclear force.
		i	There is a repulsive force on the (aluminium) nucleus (to the right) / According to conservation of momentum the (aluminium) nucleus must move (to the right)	B1	Enter text here.
		ii	$8.0\times10^{6}\times1.6\times10^{-19}=\frac{1}{2}\times6.6\times10^{-27}\times v^{2}$ (Any subject)	C1	Enter text here.
		ii	speed = 2.0×10^{7} (m s^{-1})	A1	Note: Answer to 3 sf is 1.97×10^{7} (m s^{-1}) Allow 1 sf answer 2×10^{7} (m s^{-1}) Examiner's Comments Most candidates scored full marks for calculating the speed of the alpha-particle. Many candidates knew how to convert the kinetic energy of 8.0 MeV into joules. The most frequent errors were: • Forgetting to square root the final answer. • Using the mass of an electron instead of the alpha-particle. • Using 8.0 × 106 J as the kinetic energy of the alpha-particle.
		iii	Q = 13e or q = 2e or $F=\frac{Qq}{4\pi\varepsilon_0 r^2}$	C1	Allow: $F=k\frac{Qq}{r^2}$, where k = 9x 10^{9}

© OCR 2022. You may photocopy this page.

Created in ExamBuilder

STEMUP.CO.UK

Question			Answer/Indicative content	Marks	Guidance
		iii	$270 = \frac{13 \times 1.6 \times 10^{-19} \times 2 \times 1.6 \times 10^{-19}}{4\pi \times 8.85 \times 10^{-12} \times r^2}$ (Any subject)	C1	Note: No credit for using *Q* and *q* as 13 and 2 Examiner's Comments This was a well-answered question with the majority of candidates correctly using the equation for Coulomb's law to calculate the distance r. Only a small number of candidates used the incorrect values for the charge of the aluminium nucleus and the alpha-particle. It was good to see many candidates rearranging the equation first, then substituting the values and finally writing the answer to the correct number of significant figures.
		iii	distance = 4.7×10^{-15} (m)	A1	Enter text here.
		iv	The strong force is attractive	M1	Allow: The strong force is repulsive M1
		iv	Correct explanation of size / direction of resultant force	A1	Correct explanation of size / direction of resultant force A1 Examiner's Comments The modal mark for this question was one. This mark was scored by candidates for recognising that the strong force was either attractive at long distances or repulsive at very close distances. Only a small number of candidates were successful in discussing the effects of the strong nuclear force and the electrostatic force on the resultant force on the alpha-particle.
			Total	9	
6			B	1	
			Total	1	

STEMUP.CO.UK

Question			Answer/Indicative content	Marks	Guidance
7	a		Similarity The field strength or force ∝ 1 / separation^2 or both produce a radial field.	B1	
			Differences Gravitational field is linked to mass and electric field is linked to charge.	B1	
			Gravitational field is always attractive whereas electric field can be either attractive or repulsive.	B1	
	b	i	The charges repel each other (because they have like charges).	B1	
		i	Each charge is in equilibrium under the action of the three forces: downward weight, a horizontal electrical force and an upwardly inclined force due to the tension in the string.	B1	
		ii	$F = \frac{(4.0\times10^{-9})^2}{4\pi\varepsilon_0 \times 0.02^2} = 3.596....\times10^{-4}$ (N)	C1	Correct use of $F = \frac{Qq}{4\pi\varepsilon_0 r^2}$
		ii	weight $W = 6.0 \times 10^{-5} \times 9.81 = 5.886 \times 10^{-4}$ (N)	C1	
		ii	$\tan\theta = \frac{3.596\times10^{-4}}{5.886\times10^{-4}}$	C1	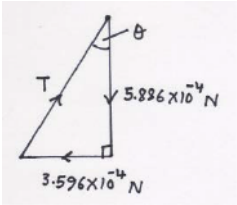
		ii	angle θ = 31°	A1	
	c	i	Parallel and equidistant field lines.	B1	Note: Field lines must be right angle to the plates.
		i	Field direction is correct (from left to right).	B1	
		ii	work done = $1500 \times 1.6 \times 10^{-19} \times 1.2 \times 10^{-2} = 2.88 \times 10^{-18}$ (J)	C1	
		ii	$\frac{1}{2}\times9.11\times10^{-31}\times v^2 = \frac{1}{2}\times9.11\times10^{-31}\times(5.0\times10^6)^2 - 2.88\times10^{-18}$	C1	Correct use of: final KE = initial KE – work done.
		ii	speed = 4.3×10^6 (m s^{-1})	A1	

© OCR 2022. You may photocopy this page.

Created in ExamBuilder

STEMUP.CO.UK

Question			Answer/Indicative content	Marks	Guidance
			Total	14	
8			A	1	
			Total	1	
9	a	i	The force is right angles to the motion / velocity.	B1	
		i	The particle describes a circle in the plane of the paper.	B1	
		ii	Particle experiences a force perpendicular to motion / velocity.	B1	
		ii	It moves to the right and either comes out or goes into the plane of the paper (in a parabolic path).	B1	
	b	i	$V \propto 1/r$ or distance = $3R$	C1	
		i	V = 5400 (V)	A1	
		ii	1 $5400 = \frac{Q}{4\pi \times 8.85 \times 10^{-12} \times 0.04}$ (Any subject)	C1	Possible ecf from (i)
		ii	$Q = 2.4 \times 10^{-8}$ (C)	A1	
		ii	2 $E = \frac{2.4 \times 10^{-8}}{4\pi \times 8.85 \times 10^{-12} \times 0.04^2}$	C1	Possible ecf from (ii)1
		ii	$E = 1.35 \times 10^5$ (N C^{-1})	A1	
	c		The magnitude of the electric potential is the same for both particles at the midpoint but of opposite sign.	B1	
			The (total) potential at the midpoint is zero.	B1	
			Total	12	

© OCR 2022. You may photocopy this page.

Created in ExamBuilder

STEMUP.CO.UK

Question			Answer/Indicative content	Marks	Guidance
10	a		$eV = ½mv^2$ so $v^2 = 2eV/m$ $ma = eE$ so $a = eE/m$ $x = vt$ $d = ½at^2 = ½a(x/v)^2$ $d = (eE/2m).x^2.(m/2eV) = Ex^2/4V$ $x^2 = 4(d/E)V$	B1 B1 B1 B1 B1 A0	four equations are needed and some sensible substitution, etc. shown for the fifth mark
	b	i	22.1 ± 0.9	B1	value plus uncertainty both required for the mark allow ± 1.0
		ii	two points plotted correctly, including error bars;	B1	**ecf** value and error bar of first point
		ii	line of best fit worst acceptable straight line.	B1	**allow ecf** from points plotted incorrectly steepest or shallowest possible line that passes through all the error bars; should pass from top of top error bar to bottom of bottom error bar **or** bottom of top error bar to top of bottom error bar
		ii	gradient (= 4d / E) = 2.4 ± 0.4;	B1	**allow** 2.4 ± 0.5
		ii	$E = 4 \times 2.0 \times 10^{-2} / 2.4 \times 10^{-6} = 3.3 \times 10^4$	B1	
		ii	$(3.3) \pm 0.6 \times 10^4$	B1	0.1/4 + 0.4/2.4 = 0.192 × 3.3 = 0.63
		ii	$V\ m^{-1}$ or $N\ C^{-1}$	B1	0.1/4 + 0.5/2.4 = 0.233 × 3.3 = 0.77 **allow** $3.3 \pm 0.8 \times 10^4$
			Total	12	

© OCR 2022. You may photocopy this page.

Created in ExamBuilder

STEMUP.CO.UK

Question			Answer/Indicative content	Marks	Guidance
11	a	i	gradient = 1.25 (× 10^{-7}) (Q = gradient × 4π × 8.85 × 10^{-12})	C1	**Ignore** POT **Allow** gradient in the range 1.20 to 1.30 (× 10^{-7})
		i	charge = 1.4 × 10^{-17} (C)	A1	**Allow** full credit for substitution method ECF from incorrect value of calculated gradient **Examiner's Comments** This was a discriminating question, with many top-end candidates gaining full marks. The answers showed careful reasoning and good graphical skills. The charge Q on the nucleus was given by the equation Q = gradient × $4\pi\varepsilon_0$. The success in this question relied on the correct determination of the gradient. Many of the low-scoring candidates either failed to recognise how Q was related to the gradient or found determining the gradient challenging. For example, instead of the gradient being $\frac{1.0\times10^{21}}{8.0\times10^{27}}$, it either became $\frac{1.0\times10^{21}}{\mathbf{8.0^2}\times10^{27}}$ or $\frac{1.0\times10^{21}}{\frac{1}{8}\times10^{27}}$. Examiners awarded one mark for the gradient, where power of tens was ignored and the final mark was for the value for Q.
		ii	The gradient decreases	B1	**Allow** E is smaller for the same r

© OCR 2022. You may photocopy this page.

Created in ExamBuilder

STEMUP.CO.UK

Question			Answer/Indicative content	Marks	Guidance
		ii	Explanation: *Q* decreases / there are fewer protons	B1	**Examiner's Comments** Most candidates scored two marks for recognising that the charge on the daughter nucleus was less and this meant that the gradient of the line would decrease. A significant number of candidates mentioned the gradient decreasing but gave the reason as *'the alpha particle has a smaller charge than the nucleus'*. A small number of candidates considered the effect on $1/r^2$ caused the loss of two protons and did not score any marks.
	b	i			**Allow** other correct methods
		i	$(E =) \frac{1.5(\times 10^3)}{2.10(\times 10^{-2})}$ or 7.14 (× 10_4)	C1	**Ignore** POT
		i	(mass of droplet = $\frac{4}{3}\pi r^3 \times \rho$ =) 8.15×10^{-15} (kg) (electrical force = weight / $EQ = mg$)	C1	**Note** there is no ECF for incorrect *E* or mass values

STEMUP.CO.UK

Question			Answer/Indicative content	Marks	Guidance
		i	$7.14 \times 10^4 \times Q = 8.15 \times 10^{-15} \times 9.81$ (Any subject) <u>and</u> hence charge = $1.1(2) \times 10^{-18}$ (C)	A1	**Allow** 1 mark for a bald 1.12×10^{-18} (C); answer to 3 SF or more but a bald 1.1×10^{-18} C scores zero **Examiner's Comments** The modal mark for this tough question was three. Most candidates correctly calculated the mass or the weight of the droplet and the electric field strength between the parallel plates. These quantities were correctly used to calculate the magnitude of the charge on the droplet. Some top-end candidates demonstrated excellent algebraic skills by deriving an equation for the charge and then substituting values to get an answer of 1.12×10^{-18} C. The most common error was to calculate the electric field strength using $E = \frac{V}{d}$ and then to spoil the answer by using $E = \frac{Q}{4\pi\varepsilon_0 r^2}$ to determine the charge *Q*.
		ii	(number of el ectrons $\frac{1.12 \times 10^{-18}}{1.6 \times 10^{-19}}$ =) 7 (An integer)	B1	**Note** there is no ECF from **(i)** since 1.1×10^{-18} C is given **Not** 6.88 or 6.9 when using 1.1×10^{-18} C, but allow either of the integers 7 or 6 **Examiner's Comments** Most candidates quoted the number of electrons responsible for the charge to be 7. Examiners were expecting the answer to be integer, so an answer such as 6.9 was not allowed.
			Total	8	
12			B	1	
			Total	1	

STEMUP.CO.UK

Question			Answer/Indicative content	Marks	Guidance
13			The charge on each plate remains the same.	B1	Allow other correct methods.
			$C = \varepsilon_0 A/d$, hence the capacitance is halved.	B1	
			$E = ½ Q^2/C$, $E \propto 1/C$ and hence energy stored doubles.	B1	
			Total	3	

© OCR 2022. You may photocopy this page.

Created in ExamBuilder

STEMUP.CO.UK

Question			Answer/Indicative content	Marks	Guidance
14	a	i	The direction of the electric field due to the negative charge is to the left and right for the positive charge.	B1	
		i	The magnitude of the electric field strength due to the positive charge is smaller than that for the negative charge (because of greater distance). (Hence the resultant electric field strength is to the left.)	B1	
		ii	energy = $\frac{Qq}{4\pi\varepsilon_0 r} = \frac{(1.60\times10^{-19})^2}{4\pi\varepsilon_0 \times 3.0\times10^{-10}}$	C1	
		ii	energy = 7.67(2) × 10^{-19} (J)	C1	
		ii	energy = 4.8 (eV)	A1	
	b	i	($v^2 = u^2 + 2as$) $(2.4 \times 10^6)^2 = (7.2 \times 10^6)^2 + 2 \times a \times 1.2 \times 10^{-2}$	C1	**Allow** other correct methods
		i	a = (–) 1.9 × 10^{15} (m s^{-2})	A1	**Allow** 1 mark for 1.9 × 10^{13}; distance left in cm **Note** answer to 3 s.f. is 1.92 × 10^{15} (m s^{-2}) **Ignore** sign
		ii	$E = F/Q$ and $F = ma$	C1	
		ii	$E = \frac{1.67\times10^{-27}\times1.92\times10^{15}}{1.60\times10^{-19}}$	C1	Possible ECF from **(i)**
		ii	E = 2.0 × 10^7 (N C^{-1})	A1	**Allow** 2 marks for 1.1 × 10^4; mass of electron used **Allow** 1 s.f. answer
			Total	9	
15			Flemings left hand rule / the force on the electron is in the plane of the paper, right angles to the velocity and 'downwards'.	B1	
			Circular path within field in a clockwise direction.	B1	**Note**: If drawn on Fig. 22.1, then judge 'circular' path by eye.
			Total	2	

© OCR 2022. You may photocopy this page.

Created in ExamBuilder

STEMUP.CO.UK

Question			Answer/Indicative content	Marks	Guidance
16		i	acceptable pattern with lines touching but not entering spheres	B1	adequate drawing for 1 mark
		i	lines perpendicular to spheres and arrows from plus ion to minus ion	B1	award second mark for detail/quality
		ii	$E = kQ/r^2$ where $k = 1/4\pi\varepsilon_0$	C1	correct formula with Q = e
		ii	$E = 9 \times 10^9 \times 1.6 \times 10^{-19}/6.25 \times 10^{-20}$	C1	correct substitution
		ii	$E = 2.3 \times 10^{10}$	C1	evaluation
		ii	$2E = 4.6 \times 10^{10}$ (N C^{-1})	A1	fields of charges add, **allow ecf** for E
			Total	6	
17			D	1	
			Total	1	

© OCR 2022. You may photocopy this page.

Created in ExamBuilder

STEMUP.CO.UK

Question			Answer/Indicative content	Marks	Guidance
18	a		Correct pattern Correct direction of the field	B1 B1	**Note:** At least five field lines must be drawn and of these, two must be perpendicular (by eye) to the surface of the sphere and plate **Note:** This may be shown on just one line **Examiner's Comment** Most candidates drew decent field patterns and showed the correct direction of the electric field. It is difficult to draw curved field lines, but those who were careful and had the field lines perpendicular at both the surface of the sphere and the metal plate were rewarded.
	b		(Electric potential) is the work done per (unit) charge in bringing a positive charge from infinity (to the point).	B1	**Allow:** work done / energy required to bring a unit positive charge from infinity (to the point) **Examiner's Comment** This was not well-answered; the modal mark was zero. Definition for electric potential lacked precision and often made no reference to a 'unit **positive** charge' or 'per unit **positive** charge'. At times, other quantities such as electric field strength and gravitational field strength were being defined. This was a missed opportunity -definitions just need to be learnt.

© OCR 2022. You may photocopy this page.

Created in ExamBuilder

STEMUP.CO.UK

Question			Answer/Indicative content	Marks	Guidance
	c	i	$V = Q/4\pi\varepsilon_0 r$ (Allow any subject) $Q = 4\pi \times 8.85 \times 10^{-12} \times 0.015 \times 5000$ $Q = 8.3(4) \times 10^{-9}$ (C)	C1 C1 A0	**Note** using $E = V/d$ with $E = Q/4\pi\varepsilon_0 r^2$ is wrong physics and hence scores zero **Note** if the value of ε_0 is not given here, it could be implied in the correct 3sf answer **Allow** any subject here if the answer is given to more than 2sf **Allow** the use of $1/4\pi\varepsilon_0 = 9 \times 10^9$ **Examiner's Comment** By contrast to the last question, the answers here were perfect. Correct values were substituted into the equation for electric potential to show that the charge was that stated in the question. In a 'show' question, always give the final answer to more significant figures than the required answer. It was good to see many scripts with the final answer written as 8.34×10^{-9} C.
		ii	1 (electric force =) $1.7 \times 10^{-2} \times \tan 4.0$ (Allow any subject) (electric force = 1.19×10^{-3} N) 2 $E = 1.2 \times 10^{-3}/8.3(4) \times 10^{-9}$ $E = 1.4 \times 10^5$ (N C^{-1})	M1 (A0) C1 A1	**Not** 1.7×10^{-2} sin4 or 1.7×10^{-2} cos86 **Allow** $1.7 \times 10^{-2} \times$ sin4/cos4 **Allow** 2 marks for 1.45×10^5 (N C^{-1}), 8.3×10^{-9} used **Allow** 2 marks for 1.43×10^5 (N C^{-1}), 1.19×10^{-3} (N) used **Examiner's Comment** This was a good discriminator with high-scoring candidates either using triangle of forces, or resolution of forces, to determine the electric force on the sphere. The value of the force was given so that it could be used to answer the next question. More than half of the candidates correctly calculated the electric field strength using the information provided in **(c)(i)** and **(c)(ii)1.** Some candidates used the elementary charge rather than the value from **(c)(i)** to calculate the field strength; this gave an incorrect answer of 7.5×10^{15} N C^{-1}.
			Total	8	

© OCR 2022. You may photocopy this page.

Created in ExamBuilder

STEMUP.CO.UK

Question			Answer/Indicative content	Marks	Guidance
19	a		$\varepsilon = 7.2 \times 10^{-12} \times 1.2 \times 10^{-3}/4.0 \times 10^{-4}$ permittivity = 2.2×10^{-11} (F m^{-1})	C1 A1	**Allow** any subject **Allow** ε_o instead of ε **Note** answer to 3 sf is 2.16×10^{-11} (F m^{-1}) **Allow** 1 mark for bald 2.4; relative permittivity calculated **Examiner's Comment** Most candidates effortlessly used the equation $C = \varepsilon A / d$ to determine the permittivity s of the insulator between the capacitor plates. Once again, most answers were well-structured and showed good calculator skills. The most common errors were: • Taking the prefix pico (p) to be a factor of 10^{-9}. • Confusing permittivity ε and permittivity of free space ε_0. • Calculating relative permittivity (2.4).
	b	i	capacitance of two capacitors in series = 500 (πF) C = 1000 + 500 C = 1500 (μF)	C1 A1	**Examiner's Comment** The modal score here was two marks, with most scripts showing excellent understanding of capacitors in combination. Many candidates arrived at the final answer of 1500 μF without much calculation. A small number incorrect swapped the equations for series and parallel combinations and arrived at the incorrect answer of 670 μF.

STEMUP.CO.UK

Question			Answer/Indicative content	Marks	Guidance
		ii	$V = 1.5 \times e^{-12/15}$ $V = 0.67$ (V)	C1 A1	Possible ecf from **(i)** **Allow** 1 mark for 0.83 V, $V = 1.5[1 - e^{-12/15}]$ used **Examiner's Comment** Many candidates correctly calculated the time constant of the circuit and then either determined the p.d. across the capacitors (0.83 V) or the resistor (0.67 V) - the latter being the correct answer. The most common mistake was calculating e^{-12115} rather than $1.5 \times e^{-12/15}$. Weaker candidates got nowhere by attempting to use $V = IR$ and $Q = VC$.
			Total	6	
20			F = Bev **and** F = eE E = V / a **or** F = (eE) = eV / a Bev = eV / a giving V = Bva	B1 B1 B1	**allow** Q or q for e **Examiner's Comments** This was an exercise in writing basic definitions in algebraic form and then using them to derive a given equation. More than half of the candidates managed to gain full marks with less than one third scoring zero. The presentation was sometimes difficult to follow with the inclusion of unnecessary equations and deletions and the substitution of *d* for *a* in the last line.
			Total	3	
21			A	1	
			Total	1	
22			B	1	
			Total	1	

© OCR 2022. You may photocopy this page.

Created in ExamBuilder

STEMUP.CO.UK

Question			Answer/Indicative content	Marks	Guidance
23			Level 3 (5–6 marks) Clear description **and** correct value of *C* *There is a well-developed line of reasoning which is clear and logically structured. The information presented is relevant and substantiated.* Level 2 (3–4 marks) Clear description **and** some correct working OR Some description **and** correct value for *C* *There is a line of reasoning presented with some structure. The information presented is in the most-part relevant and supported by some evidence.* Level 1 (1–2 marks) Some description OR Some working *There is an attempt at a logical structure with a line of reasoning. The information is in the most part relevant.* 0 marks No response or no response worthy of credit	B1 × 6	Indicative scientific points may include: Description • $C = \varepsilon A/d$ • A = area (of overlap) and d = separation. • Use ruler to measure the side / radius / diameter (andhence the area A) • Ensure total overlap of plates. • Measure the thickness / d of paper using micrometer /(vernier) caliper. • Take several readings of thickness and determine anaverage value for d Calculation of capacitance • gradient ≈ 85 • C ≈ 1.2×10^{-8} (F) <u>Examiner's Comments</u> This was the second of the two LoR questions in this paper. It required application of practical skills from module 1.1 (Development of practical skills), knowledge of parallel plate capacitor and permittivity. As with the other LoR question 17, examiners expect varied responses for the criteria for the three levels to be met. Unlike some of the analytical questions, there is no one perfect model answer for a specific question. For Level 3, correct value of the capacitance *C* was required together with a clear description of how to do the additional measurements that led to the determination of the permittivity of the paper. For Level 2, it was either clear description with some correct working or some description with the correct value for *C*. Level 1 required some description or some working. As expected, there were diverse answers which demonstrated adequate experimental and practical skills. The

STEMUP.CO.UK

Question			Answer/Indicative content	Marks	Guidance
					thickness of the paper was invariably measured using a micrometer, but some candidates decided to measure the total thickness of a large number of sheets using a ruler and then calculating the thickness of each sheet. This technique was as good as using a micrometer or using Vernier calipers. Diverse answers are the characteristic of LoR questions. The most common errors made were: • Confusing permittivity with either relative permittivity or the permittivity of free space ε_0. • Using $C = 4\pi\varepsilon R$ instead of $C = {}_{\varepsilon}A/d$. • Issues with powers of ten when determining the gradient – mainly because of the milli prefix on the time axis. Exemplar 10 $\frac{dy}{dx} = \frac{0.68}{8\times10^{-3}} = 8.5$ $85 = \frac{1}{CR}$ $R = 1\times10^{6}$ $CR = \frac{1}{85}$ $C = \frac{1}{85(1\times10^{6})}$ $= 1.18\times10^{-8}$ F $C = \frac{\varepsilon A}{d}$ – would also need the area of the plates (A) on the capacitor and the separation between them (d) – can then rearrange equation to give $\frac{Cd}{A} = \varepsilon$ – can use to figure out ε 12

STEMUP.CO.UK

Question			Answer/Indicative content	Marks	Guidance
					This exemplar illustrates a Level 2 performance from this top-end candidate. The analysis is perfect, but the description is basic and there are no details of the instruments needed to make the measurement. It would have taken a couple more lines to elevate this answer to Level 3. Compare and contrast this with the exemplar below for a Level 3 response. **Exemplar 11** $\lvert \Delta \ln(V) \rvert = 0.68$ $\lvert \Delta t \rvert = 8 \times 10^{-3}$ s $\lvert n \rvert = \frac{1}{CR} = \frac{0.68}{8 \times 10^{-3}}$ $= 85$ $85 = \frac{1}{C(10^{6})}$ $C^{-1} = 8.5 \times 10^{7}$ $C = 1.176... \times 10^{-8}$ F $= 11.8$ nF Via the equation $C = \frac{\varepsilon A}{d}$ to deduce ε, all the student must do is measure d (thickness of the paper) and A (Area of paper between aluminium plates) to give $\frac{Cd}{A} = \varepsilon$ To measure d, take 50 of the sheets of paper used and stack them atop of another, using a micrometer screw gauge or a vernier caliper, measure this distance (ensuring not to crumple the paper) and divide by 50 for the d value. To calculate A, simply measure the width and height of both of the aluminium plates with a ruler (if small enough use a vernier caliper). Taking an average of height and width, multiply these together for the A value. Then $\varepsilon = \frac{Cd}{A}$ gives the permittivity of paper 10 L3 Turn over This above is a typical Level 3 answer. Correct calculation and a description that has all the right ingredients. Notice how the appropriate measuring instruments are being used and how the uncertainty in the measurements is reduced.
			Total	6	

STEMUP.CO.UK

Question			Answer/Indicative content	Marks	Guidance
24		i	Kinetic energy (of proton) changes to potential (energy) **or** Potential energy increases as the kinetic energy (of the proton) decreases **or** Potential energy increases as work is done against the field / against repulsion / positive charge	B1	**Allow** 'it' / PE for (electric) potential energy **Allow** KE / E_k

STEMUP.CO.UK

Question			Answer/Indicative content	Marks	Guidance
		ii	energy = $0.52 \times 10^{6} \times 1.60 \times 10^{-19}$ or $8.3(2) \times 10^{-14}$ (J)	C1	
			$\frac{1.60 \times 10^{-19} \times 27 \times 1.60 \times 10^{-19}}{4\pi\varepsilon_0 R} = 8.32 \times 10^{-14}$	C1	
			$R = 7.5 \times 10^{-14}$ (m)	A1	**Allow** 2 mark for 1.6×10^{-13} (m); Z = 59 used **Allow** 2 mark for 8.9×10^{-14} (m); Z = 32 used **Allow** 1 mark for 2.8×10^{-15} (m); Z = 1 used **Allow** 1 mark for 1.2×10^{-32} (m); energy = 5.2×10^{5} used Examiner's Comments The above question on electric potential energy provided excellent discrimination with middle and upper quartile candidates showing how to produce immaculate answers – identify the physics, write down the correct physical equation, do any necessary conversions (e.g. MeV to J), rearrange the equation, substitute correctly and then write the final answer in standard form to the correct number of significant figures. About a third of the candidates scored full marks. Some of the missed opportunities or errors were: • Using an incorrect equation with the distance squared • Not correctly converting the kinetic energy 0.52 MeV into joule (J) • Using the equation $r = r_0 A^{1/3}$ for the mean radius of a nucleus to determine the minimum distance
			Total	4	

© OCR 2022. You may photocopy this page.

Created in ExamBuilder

STEMUP.CO.UK

Question			Answer/Indicative content	Marks	Guidance
25		i	Proton is repelled (by nucleus) (High-speed) proton can get close to (oxygen) nucleus	B1 B1	 **Allow** 'proton can experience the strong (nuclear) force' **Not** 'collide / hit nucleus'
		ii	E = [0.25 - (2.24 - 2.20)] × 10^{-11} (J) **or** 0.21 × 10^{-11} (J) $\lambda = \frac{6.63 \times 10^{-34} \times 3.00 \times 10^{8}}{0.21 \times 10^{-11}}$ (Any subject) λ = 9.5 × 10^{-14} (m)	C1 C1 A1	 **Allow** 2 marks for 6.9 × 10^{-14}; E = 0.29 × 10^{-11} used **Allow** 1 mark for a value correctly calculated based on any other incorrect value for E (e.g. 8(.0) × 10^{-14} for E = 0.25 × 10^{-11} and 5(.0) × 10^{-13} for E = 0.04 × 10^{-11})
		iii	Used in PET (scans) Any <u>one</u> from: Used to diagnose function of organ / brain / body Detection of cancer / tumour Non-invasive / no surgery / no infection 3D (image)	M1 A1	Enter text here.
			Total	7	
26			c	1	<u>Examiner's Comments</u> This was a well-answered question with most candidates correctly recalling that charge is conserved according to Kirchhoff's first law. A significant number of candidates distracted towards **B**; perhaps because of the unit of charge is the coulomb.
			Total	1	

© OCR 2022. You may photocopy this page.

Created in ExamBuilder

STEMUP.CO.UK

Question			Answer/Indicative content	Marks	Guidance
27			D	1	<u>Examiner's Comments</u> This question was assessing the simple learning outcome 6.2.1b from the specification – *modelling a uniformly charged sphere as a point charge at its centre*. The correct key is **D**. The most popular distractor was **A** with distance being measured between the two surfaces of the sphere.
			Total	1	
28			B	1	<u>Examiner's Comments</u> This question required knowledge of the equation $E = \frac{Q}{4\pi\varepsilon_0 r^2}$, which is in the Data, Formulae and Relationship Booklet. The key, the correct answer, is **B**. The most common mistake made by candidates was not squaring *r*, or the equivalent where the electric potential *V* equation was used instead. This gave the incorrect answer of 7.3×10^{-10} C for the most recurrent distractor **C**. The exemplar 2 below shows a plausible method for getting to the correct answer. Exemplar 2 The electric field strength at a distance of 2.0×10^{-8} m from a nucleus is 3.3×10^{8} N C^{-1}. What is the charge on the nucleus? **A** 1.6×10^{-19} C **B** 1.5×10^{-17} C **C** 7.3×10^{-10} C **D** 3.8×10^{-9} C Your answer B [1] $E = \frac{Q}{4\pi\varepsilon_0 r^2}$ $E 4\pi\varepsilon_0 r^2 = Q$ $(3.3\times10^{8})(4\pi)(8.85\times10^{-12})(2\times10^{-8})^2$ This middle-grade candidate has shown all the working. A significant number of candidates wrote down the correct expression, circled the key data in the question and did the rest of the work on their calculators. A variety of techniques were use.
			Total	1	

STEMUP.CO.UK

Question			Answer/Indicative content	Marks	Guidance
29	a	i	*Qd* = constant At least **two** pairs of values substituted to show that *Qd* = constant	C1 A1	**Allow** straight-line graph of *Q* against 1/*d* passes through the origin **Allow** as *d* increases by a given factor (e.g. doubles) then *Q* decreases by the same factor (e.g. halves) **Allow** numbers that show when *d* doubles then *Q* halves **Ignore** prefixes and POT errors <u>Examiner's Comments</u> The question was not carefully examined by most candidates, because the reference to use **Fig. 22.2** was totally ignored. A significant number of candidates focused either on superfluous practical details or the proof of the relationship between *Q* and *d* – which was required in the next question. About a third of the candidates used at least two points on the graph to show that *Qd* = constant. The powers of ten were overlooked by examiners. A small number of candidates, mainly at the lower-end, calculated the gradient of the curve at arbitrary points to provide support for their incorrect reasoning.
		ii	$Q = VC$ and $C = \frac{\varepsilon_0 A}{d}$ Hence $Q = \frac{V\varepsilon_0 A}{d}$ (and $Q \propto \frac{1}{d}$)	C1 A1	**Allow** ε **Note** *Q*, or *Q/V* must be the subject here **Allow** $Q \propto C$ and $C \propto \frac{1}{d}$ <u>Examiner's Comments</u> Most candidates successfully, and elegantly, provided the proof for the relationship. Correct answers ranged from the whole space filled with algebra to a couple of succinct lines. A small number of candidates finished off their working by writing $Q = \frac{1}{d}$ instead $Q \propto \frac{1}{d}$ the 'equal' and the 'proportionality' symbols are not equivalent.

STEMUP.CO.UK

Question			Answer/Indicative content	Marks	Guidance
	b	i	1.8×10^{-14} (N)	B1	**Ignore** sign <u>Examiner's Comments</u> This question was designed to support candidates with the next question. The majority scored 1 mark for quoting the weight of the oil drop. A significant number of candidates, about 1 in 5, focused incorrectly on the term **stationary** in the question, and wrote 0 N on the answer line.
		ii	(F_E =) $3 \times 1.8 \times 10^{-14}$ (N) **or** (F_E =) 5.4×10^{-14} (N) **or** (mass =) $\frac{1.8 \times 10^{-14}}{g}$ (resultant force = 3.6×10^{-14} N) (a =) $\frac{3.6 \times 10^{-14}}{(1.8 \times 10^{-14}/g)}$ a = 20 (ms^{-2})	C1 C1 A1	**Note** this mark is for either electric force on the oil drop **or** the calculating the mass of the oil drop **Allow** for ECF from **(b)(i)** **Allow** g = 9.8, but not g = 10 **Note** answer to 3SF is 19.6 **Allow** 2 marks for $a = 2g$ **Note** a bald answer of 20 will score 3 marks, if however, we see evidence for g = 10, then maximum score will be 2 mark <u>Examiner's Comments</u> This was a perfect question for the higher and middle ability candidates. Securing full marks was very much dependent on candidates' understanding of **resultant force**. The majority of the candidates scored 1 mark for calculating the weight of the oil drop in kg. Subsequent steps required the electric force on the oil drop to be 3 times the weight, or the resultant force being twice the weight. The key to getting the correct answer of $2g$, or 19.6 m s^{-2}, was deducing that the resultant force was 3.6×10^{-14} N. The most common incorrect answer was 29.4 ms^{-2} because the resultant force was taken as 5.6×10^{-14} N. The exemplar 9 below shows the most common incorrect solution.

© OCR 2022. You may photocopy this page.

Created in ExamBuilder

STEMUP.CO.UK

Question			Answer/Indicative content	Marks	Guidance
					Exemplar 9 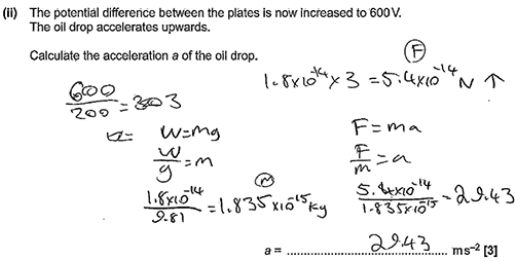 (ii) The potential difference between the plates is now increased to 600 V. The oil drop accelerates upwards. Calculate the acceleration *a* of the oil drop. $\frac{600}{200} = 3$ $1.8\times10^{-14} \times 3 = 5.4\times10^{-14}$ N ↑ $W = mg$ $\frac{W}{g} = m$ $F = ma$ $\frac{F}{m} = a$ $\frac{1.8\times10^{-14}}{9.81} = 1.835\times10^{-15}$ kg $\frac{5.4\times10^{-14}}{1.835\times10^{-15}} = 29.43$ *a* = 29.43 ms^{-2} [3] This exemplar from a middle-grade candidate shows how lack of knowledge of resultant force on the oil drop led to just 1 mark. The only mark given was for the mass of the oil drop. Using as 5.6×10^{-14} N as the resultant force led to the incorrect response of 3*g* or 29.43 m s^{-2}.

STEMUP.CO.UK

Question			Answer/Indicative content	Marks	Guidance
	c		**Level 3 (5–6 marks)** Clear description **and** at least two from control of variables *There is a well-developed line of reasoning which is clear and logically structured. The information presented is relevant and substantiated.* **Level 2 (3–4 marks)** Some description **and** at least one from control of variables *There is a line of reasoning presented with some structure. The information presented is in the most part relevant and supported by some evidence.* **Level 1 (1–2 marks)** Any description but no control of variables **or** Limited mention of control of variable(s) *There is an attempt at a logical structure with a line of reasoning. The information is in the most part relevant.* **0 marks** *No response or no response worthy of credit.*	B1× 6	Use level of response annotations in RM Assessor **Indicative scientific points may include:** **Description** • $E = V/d$ • Voltmeter used to measure p.d. • Ruler used to measure separation d plates • Plastic rod held in a stand • Safety: Do not touch the terminals of high-voltage supply / (positive) plate • Vary d or V to change E • θ determined for each value of E • Experiment repeated for several values of E • Sensible techniques used to determine θ, e.g. use a protractor • Plot $\tan\theta$ against E **or** $\tan\theta$ against $1/d$ graph • Straight line through origin (expected) **Control of variables** • Charge q kept constant (ignore method) • Method for keeping q constant (e.g. same V for the (positive) plate, use separate constant voltage supply, etc) • Use the same foil / keep W the same • Keep d or V constant • Foil in between plates (where the field is uniform) • Draught-free room • Do the experiment quickly to avoid leakage of charge **Examiner's Comments** This was the second level of response (LoR) question in this paper. This too was designed to assess practical skills of planning, implementation, analysis and evaluation. The context of the question was force experienced by a charged gold foil in the uniform electric field provided by two parallel plates. Candidates were not expected to have seen such an experiment, but they were expected to use

STEMUP.CO.UK

Question			Answer/Indicative content	Marks	Guidance
					their knowledge of electric field strength and practical skills to present plausible approaches. On occasions, the experimental methods showed poor appreciation of some basic ideas. Some candidates were charging the foil using large current that allegedly would cause heating issues for the foil, while others decided to use $Q = It$, ammeter and a stopwatch to determine the charge on the foil – failing to appreciate that the time constant will be too small for such a technique. However, on this occasion, such over ambitious techniques were generally overlooked by examiners. As with 16d, a holistic approach to marking was used, with marks given according answers matching the descriptors for the various levels. There is no one perfect answer for this question, examiners were expecting an eclectic approach. The key things examiners were looking for were: - Methods for determining electric field strength *E*. - Using the right instruments for the measurements. - Plotting the correct graph to show the relationship given in the question was valid. - Correctly identifying the variables that were being controlled (kept constant). Access to higher level marks dependent on fully answering the question – and this included the last statement about control of variables. A significant number of candidates focused on the description and analysis of the data, without ever addressing the last sentence of the question. This question did discriminate well, with L1, L2 and L3 marks roughly distributed in the ratio 1:3:4.
			Total	14	

© OCR 2022. You may photocopy this page.

Created in ExamBuilder

STEMUP.CO.UK

Question			Answer/Indicative content	Marks	Guidance
30			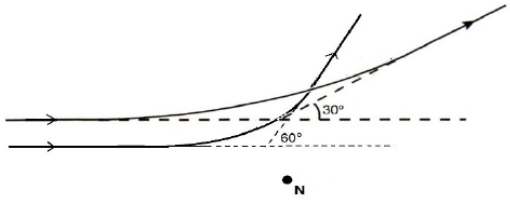	B1 B1	Path is initially horizontal **and** further up the page than original Path <u>ends</u> at 30^0 to horizontal (angle must be labelled) in the direction shown <u>Examiner's Comments</u> The common errors here were: • not realising that, for the particle to be deflected through a smaller angle, it needed to be travelling further away from N • not labelling the final angle of 30° • not adding arrows to show the direction of travel • drawing a path that continued bending beyond the stated 30° (usually ending up parallel to the original path).
			Total	2	
31		i	$12\,000 = \frac{Q}{4\pi\varepsilon_0 r}$ $12\,000 = \frac{Q}{4\pi\varepsilon_0 \times 0.19}$ $Q = 2.5(4) \times 10^{-7}$ (C)	C1 C1 A0	**Allow** $E = (V / d =)\ 6.316 \times 10^4$ **C1** and $E = 6.316 \times 10^4 = \frac{Q}{4\pi\varepsilon_0 \times 0.19^2}$ **C1**
		ii	**1** $t = 78 \times 3600$ $(I =) \frac{2.5 \times 10^{-7}}{78 \times 3600}$ $I = 8.9 \times 10^{-13}$ (A) **2** $(R =) \frac{6000}{9.0 \times 10^{-13}}$ **or** 6.7×10^{15} (Ω) **or** $V = IR$ and $R = \frac{\rho L}{A}$ $\frac{6000}{9.0 \times 10^{-13}} = \frac{\rho \times 0.38}{1.1 \times 10^{-4}}$ $\rho = 1.9 \times 10^{12}$ (Ω m)	C1 C1 A0 C1 C1 A1	There is no ECF from **(b)(i)** **Note** 2.54×10^{-7} gives an answer 9.0×10^{-13} A There is no ECF from **(b)(ii)1** **Take** 12000 V as **TE** for this C1 mark, then ECF **Note** 8.9×10^{-13} (A) gives an answer 2.0×10^{12} (Ω m)
			Total	7	

STEMUP.CO.UK

Question			Answer/Indicative content	Marks	Guidance
32			Q = 79e and q = 2e	C1	
			$F = (1/4\pi\varepsilon_0)Qq/r^2$	C1	
			$= 79 \times 2 \times (1.6 \times 10^{-19})^2 / [4\pi \times 8.85 \times 10^{-12} \times (6.8 \times 10^{-14})^2]$	C1	Apply ECF for wrong charge(s), e.g. Q and / or q = e, or Q = 79 and / or q = 2, etc
			= 7.9 (N)	A1	<u>Examiner's Comments</u> The most common error here was to use incorrect values for the charges on the two ions. Even so, most candidates were able to gain most of the marks with ECF.
			Total	4	

STEMUP.CO.UK

Question			Answer/Indicative content	Marks	Guidance
33	a	i	$F = QE = QV / d$ or $E = 5(.0) \times 10^4$ (Vm^{-1}) $F = 9.0 \times 10^{-9} \times 4000 / 8.0 \times 10^{-2}$ (= 4.5×10^{-4} N)	C1 A1	$F = 5.0 \times 10^4 \times 9.0 \times 10^{-9}$ <u>Examiner's Comments</u> Many lower ability candidates did not appreciate the uniform nature of the electric field between the plates and attempted to use Coulomb's Law.
		ii	weight; arrow vertically downwards tension; arrow upwards in direction of string electric (force); arrow horizontally to the <u>right</u> (not along dotted line)	B1 x 2	All correct, 2 marks; 2 correct, 1 mark 1 mark maximum if more than 3 arrows are drawn **Ignore** position of arrows **Allow** W **or** 0.030(N) (**not** gravity or g) **Allow** T **Allow** F **or** E or 4.5×10^{-4}(N) or electrostatic **Ignore** repulsion or attraction **Not** electric field / electric field strength / electromagnetic <u>Examiner's Comments</u> Most candidates scored a mark for showing the weight and tension forces accurately. Only a small proportion labelled the electric force arrow correctly and drew it as clearly perpendicular to the plates. **AfL** Do not use the word 'gravity' in place of 'weight'

STEMUP.CO.UK

Question			Answer/Indicative content	Marks	Guidance
		iii	$W x = F l$ 0.03 x = 4.5 x 10^{-4} x 120 **or** = 4.5 x 10^{-4} x 1.2 x = 1.8 cm **or** x = 0.018 m	M1 M1 A0	**Allow** any valid alternative approach e.g. M1 deflection angle θ = 1° M1 x = 120sinθ 1 mark for each side of the equation <u>Examiner's Comments</u> Although most candidates knew the principle of moments, many were unable to apply it correctly in this situation. More practice at this sort of question is recommended.
	b		Electric force/field (strength) increases Ball deflected further from vertical / moves to the right / touches negative plate Ball acquires the charge of the (negative) plate when it touches (Oscillates because) constantly repelled from (oppositely) charged plate	B1 B1 B1 B1	Must be clear which force is increasing Must have the idea of a repeating cycle <u>Examiner's Comments</u> The purpose of this question was to challenge the candidates to use their knowledge of electric fields in a novel practical situation. The word 'oscillate' confused many candidates, who tried to explain why the ball would perform simple harmonic motion.
	c		$I = Qf$ **or** $Q = It$ f = 3.2 x 10^{-8}/9.0 x 10^{-9} = 3.6 (Hz)	C1 A1	
			Total	12	
34			A	1	
			Total	1	

STEMUP.CO.UK

Question			Answer/Indicative content	Marks	Guidance
35		i	(force =) $\frac{(1.6 \times 10^{-19})^2}{4\pi\epsilon_0 \times (1.0 \times 10^{-15})^2}$ (F =) 230 (N) $F^2 = 230^2 + 230^2 - 2 \times 230 \times 230 \times \cos 120°$ **or** $F = 2 \times 230\cos 30°$ $F = 400$ (N)	C1 C1 C1	**Special case:** $F = \frac{Qq}{4\pi\epsilon_0 r^2} = \frac{2 \times 1.6 \times 10^{-19}}{4\pi\epsilon_0 \times (1.0 \times 10^{-15})^2}$ loses this C1 mark, then ECF for the rest of the marks **Not** the first two C1 marks for incorrect charge, then allow ECF for the final C1A1 marks **Note** force to 4 SF is 230.2 N **Allow** sine rule / scale drawing **Allow** this mark for 230cos30° **or** 200 (N) **Allow** ± 10 (N) if scale drawing used
		ii	F / arrow vertical up the page	B1	**Allow** correct arrow direction anywhere on the figure
		iii	Strong (nuclear) force (acts on the protons) The strong (nuclear) force is attractive	B1 B1	**Ignore** gravitational force **Allow** pulls / holds (the protons) / binds (the protons) for 'attractive'
			Total	7	

© OCR 2022. You may photocopy this page.

Created in ExamBuilder

STEMUP.CO.UK