OCR A-LEVEL PHYSICS A · H556

PHYSICS

EXAM QUESTION PACK

4.3 ELECTRICAL CIRCUITS

SCORE	PERCENTAGE
/114	%

STEMUP

These questions belong to OCR, not to us.

The examination questions, mark schemes and examiner comments in this pack were written and published by OCR. They are past assessment materials, reproduced here so that students can revise from them.

What we do not own

STEMUP is not affiliated with OCR and does not own, and makes no claim to own, any of the question, mark scheme or examiner report material in this pack. OCR has not endorsed, approved or been involved in the production of it. OCR and the qualification titles used here belong to their respective owners and appear for identification only.

Where to find the originals

OCR publishes its past papers, mark schemes and examiner reports free of charge. Always check the current specification at ocr.org.uk before you revise, because content and wording can change between series.

If you hold the rights to any material in this pack and would like it amended or removed, contact admin@stemup.co.uk and we will act on it.

1 A resistor **R**, an ammeter and a switch are connected in series to a battery.

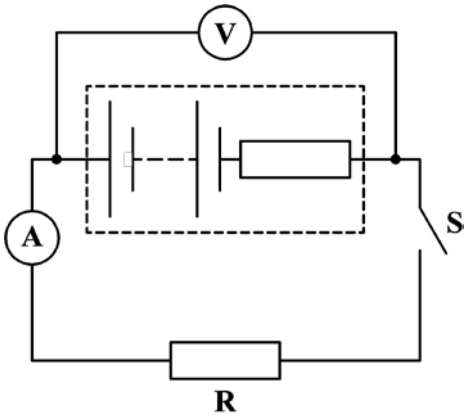

The switch **S** is open. The voltmeter reading is 9.0 V and the ammeter reading is zero. With **S** closed, the voltmeter reading is 6.0 V and ammeter reading is 2.0 A.

What is the internal resistance of the battery?

A 1.5 Ω
B 3.0 Ω
C 4.5 Ω
D 6.0 Ω

Your answer ☐

[1]

STEMUP.CO.UK

2 A 14 V d.c. supply is used to charge a 12 V car battery of internal resistance 0.80 Ω for 6.0 hours. The current in the circuit is 2.5 A.

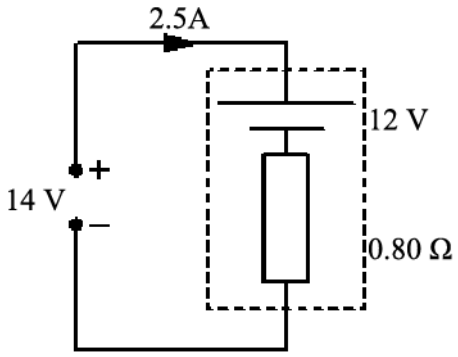

How much electrical energy is provided by the charging supply?

A 13 kJ
B 110 kJ
C 650 kJ
D 760 kJ

Your answer

[1]

STEMUP.CO.UK

3(a) **Fig. 17.1** shows a resistor and a diode connected in series to a cell.

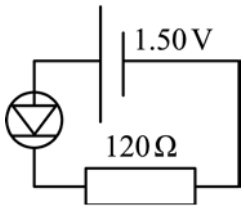

Fig. 17.1

The resistor has resistance 120 Ω. The cell has e.m.f. 1.50 V and negligible internal resistance. The potential difference across the diode is 0.62 V.

Calculate the total power dissipated in the circuit.

power = _____ W **[3]**

STEMUP.CO.UK

(b) A student designs a circuit to vary the brightness of a filament lamp. The circuit is shown in **Fig. 17.2**.

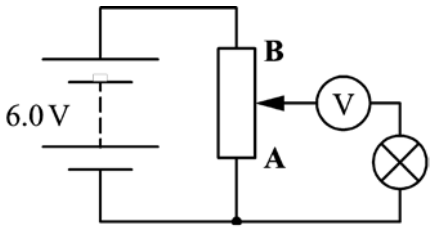

Fig. 17.2

The circuit is set up. Moving the slider from **A** to **B** changes the voltmeter reading from 0 V to 6.0 V but the lamp stays off. The lamp is not faulty.

Explain the observations above and refine the circuit design so that the brightness of the lamp can be varied as the slider is moved from **A** to **B**.

---[3]

(c) * **Fig. 17.3** shows how the resistance of a thermistor varies with temperature.

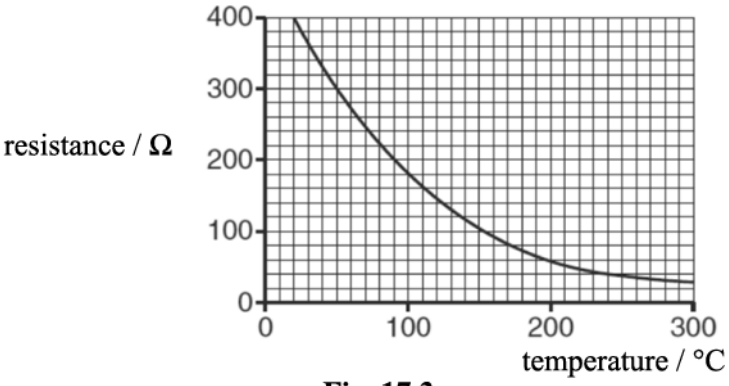

Fig. 17.3

Fig. 17.4 shows a potential divider circuit which uses this thermistor. The circuit is designed to monitor the changes in the temperature of an oven in the range 200 °C to 300 °C.

STEMUP.CO.UK

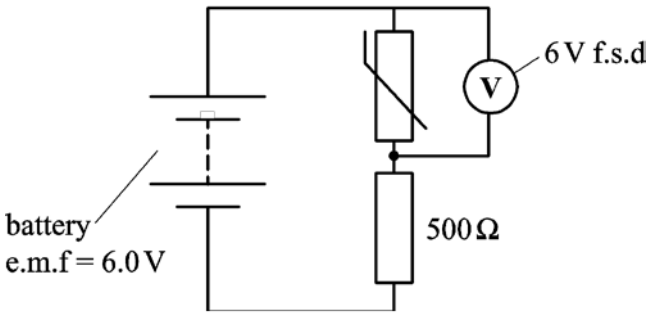

Fig. 17.4

The voltmeter has very high resistance and has a full scale deflection (f.s.d.) of 6.0 V.

Explain how the circuit works and use calculations to discuss a significant limitation of this design.

---

[6]

4 A battery of electromotive force (e.m.f.) 6.0 V is connected across a resistor of resistance 12 Ω. The potential difference across the resistor is 4.5 V.

What is the internal resistance of the battery?

A 3 Ω
B 4 Ω
C 9 Ω
D 10 Ω

Your answer ☐

[1]

STEMUP.CO.UK

5 A student is given two identical filament lamps. Each lamp is labelled as '12 V, 24 W'. The student connects the two lamps in series across a 12 V supply of negligible internal resistance.

Which of the following statements is / are true when the lamps are in **series**?

1 The resistance of each lamp is 6.0 Ω
2 The current in the circuit is greater than 1.0 A.
3 The potential difference across each lamp is 6.0 V.

A 1, 2 and 3
B Only 2 and 3
C Only 1 and 2
D Only 2

Your answer ☐

[1]

6 A wire **X** has length *L* and radius *r*. Another wire **Y** made of the same material as **X** has length 2*L* and radius 3*r*. The wires are connected in **parallel** to a battery.

What is the correct ratio of

$$\frac{\text{power dissipated in } \mathbf{Y}}{\text{power dissipated in } \mathbf{X}} \ ?$$

A 0.22
B 1.0
C 4.5
D 6.2

Your answer ☐

[1]

STEMUP.CO.UK

7 A student records the following data during an experiment to determine the internal resistance of a battery.

e.m.f. = (4.5 ± 0.2) V
terminal p.d. = (3.0 ± 0.1) V
current = (2.0 ± 0.1) A

What is the percentage uncertainty in the value for the internal resistance of the battery?

A 5.0 %
B 6.1 %
C 13 %
D 25 %

Your answer

[1]

STEMUP.CO.UK

8(a) A battery is connected in series with a lamp and a resistor as shown.

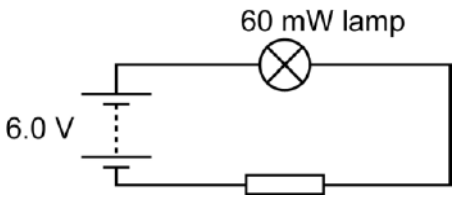

The battery has e.m.f. 6.0 V and negligible internal resistance. The potential difference across the lamp is 2.4 V and it dissipates 60 mW. The resistor has cross-sectional area of 2.0 mm^2. The number density of charge carriers (free electrons) within the resistor is 1.4×10^{25} m^{-3}.

Calculate the resistance *R* of the resistor.

R = _____ Ω **[3]**

(b) Calculate the mean drift velocity *v* of the free electrons within the resistor.

v = _____ m s^{-1} **[3]**

(c) The number density of the free electrons in the connecting wires is greater than that of the resistor. The connecting wires have the same diameter as the resistor. State and explain whether the mean drift velocity of the free electrons would be smaller, the same, or larger than your value in **(b)**.

_____

_____

_____ **[2]**

STEMUP.CO.UK

(d) A student connects the circuit shown to plot the *I*-*V* characteristic of the filament lamp.

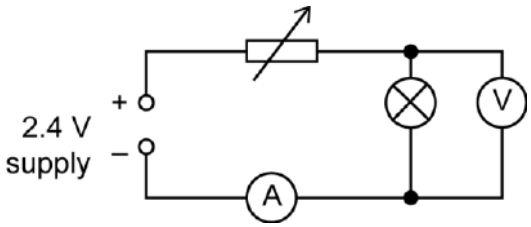

The current in the lamp is *I* and the potential difference across it is *V*. The supply has e.m.f. 2.4 V and negligible internal resistance. The maximum resistance of the variable resistor is about 60 Ω.

(i) Explain why this circuit will provide data for large *V* values but not for small *V* values.

---

[2]

(ii) Complete Fig. 16 to design a circuit so that data may be obtained for *V* from zero to 2.4 V for the lamp.

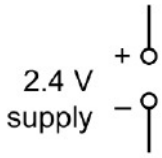

Fig. 16

[2]

STEMUP.CO.UK

9 A variable resistor is connected across the terminals of a power supply of constant e.m.f. and internal resistance *r*.

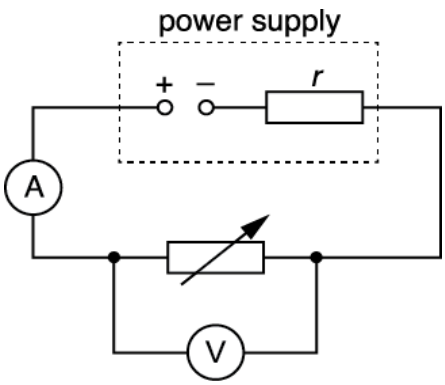

The resistance of the variable resistor is changed from zero to its maximum value.

Which of the following statements is/are correct?

1 The current in the circuit decreases.
2 The p.d. across the internal resistance decreases.
3 A graph plotted of terminal p.d. against current has a negative gradient.

A Only 1
B Only 1 and 2
C Only 1 and 3
D 1, 2 and 3

Your answer ☐

[1]

STEMUP.CO.UK

10(a) Two resistors of resistances R_1 and R_2 are connected in **parallel**.

Show that the total resistance R of this combination is given by the equation

$$\frac{1}{R} = \frac{1}{R_1} + \frac{1}{R_2} .$$

[3]

STEMUP.CO.UK

(b) A filament lamp **X** is part of an electrical circuit. The circuit has a battery of electromotive force (e.m.f.) 6.0 V and negligible internal resistance. The potential difference across the lamp can be increased **continuously** from 0 to 6.0 V. This potential difference is measured using a voltmeter.
The lamp glows brightly at 6.0 V.

(i) Draw a circuit diagram for this electrical arrangement.

[2]

(ii) Describe and explain the variation of the resistance of this lamp as the potential difference across it is changed from 0 to 6.0 V.

---

[4]

(iii) The filament lamp **X** is now connected in a different circuit as shown in Fig. 16.

STEMUP.CO.UK

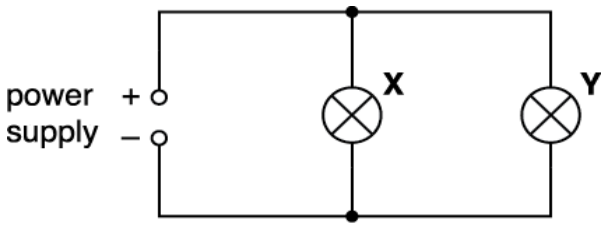

Fig. 16

The power dissipated in X is three times more than the power dissipated in the filamentlamp Y. The filament wire of lamp X has a diameter half that of lamp Y.

The filament wires of X and Y are made of the same material and are at the same temperature.

Calculate the ratio

$$\frac{\text{mean drift velocity of charge carriers in lamp } \mathbf{X}}{\text{mean drift velocity of charge carriers in lamp } \mathbf{Y}}.$$

ratio = _____ [3]

STEMUP.CO.UK

11 A circuit is shown below.

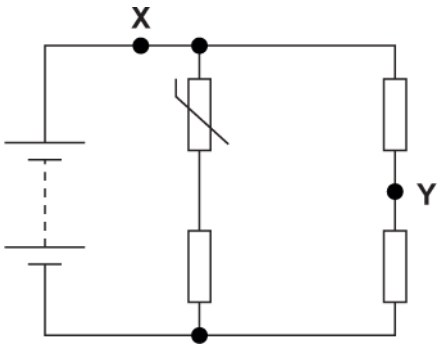

The battery has negligible internal resistance. The temperature of the NTC thermistor is **decreased**.

Which of the following statements is / are correct?

1 The current at **X** increases.

2 The current at **Y** remains the same.

3 The potential difference across the thermistor increases.

A 1, 2 and 3

B Only 2 and 3

C Only 3

D Only 2

Your answer ☐ **[1]**

STEMUP.CO.UK

12(a)

State **one** S.I. base quantity other than length, mass and time.

[1]

(b) Fig. 17 shows two resistors **X** and **Y** connected in series.

Fig. 17

The resistors are wires. Both wires have the same length L and diameter d. The material of **X** has resistivity ρ and the material of **Y** has resistivity 2ρ.

(i) Show that the total resistance R of the wires is given by the equation

$$R = \frac{12\rho L}{\pi d^2}.$$

[2]

(ii) A student uses the equation in **(i)** to determine R.

The table below shows the data recorded by the student in her lab book.

Quantity	Value
ρ	4.7×10^{-7} Ωm
L	9.5 ± 0.1 cm
d	0.270 ± 0.003 mm

STEMUP.CO.UK

1 Name the likely instruments used by the student to measure *L* and *d*.

L: _____

d: _____ [1]

2 Use the data in the table and the equation in **(i)** to determine *R* and the absolute uncertainty. Write your answer to the correct number of significant figures.

R = _____ ± _____ Ω **[4]**

3 The instrument used to measure *d* has a zero-error. The measured *d* is much **larger** than the actual value.

Discuss how the actual value of *R* compares with the value calculated above.

_____

_____

_____ [1]

STEMUP.CO.UK

13(a)

Fig. 18.1 shows a circuit.

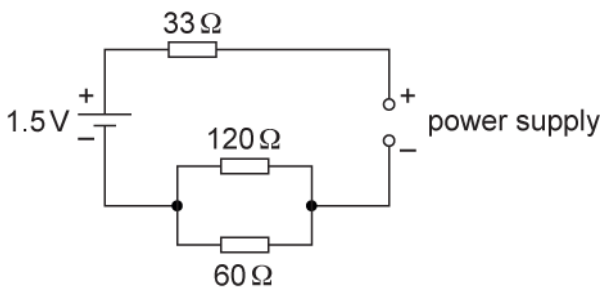

Fig. 18.1

The cell has e.m.f. 1.5 V. The cell and the variable power supply both have negligible internal resistance.

(i) The e.m.f. of the power supply is set at 4.2 V.
Calculate the current *I* in the 33 Ω resistor.

I = _____ A [3]

(ii) The e.m.f. of the variable supply is now slowly decreased from 4.2 V to 0 V.
Describe the effect on the current *I* in the 33 Ω resistor.

_____

_____

_____

_____ [2]

STEMUP.CO.UK

(b) A group of students are investigating the power dissipated in a variable resistor connected across the terminals of a cell. The cell has e.m.f. 1.5 V.

The students determine the power *P* dissipated in the variable resistor of resistance *R*.

Fig. 18.2 shows the data points plotted by the students on a graph of *P* (*y*-axis) against

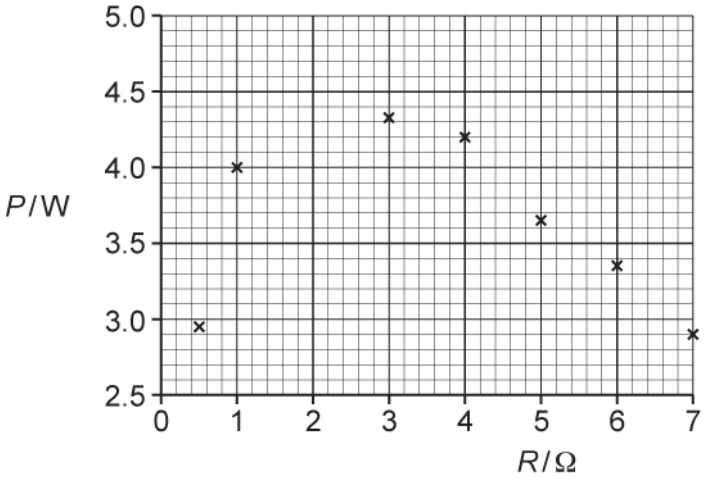

Fig. 18.2

The group of students know that **maximum power** is dissipated in the variable resistor when *R* is equal to the internal resistance *r* of the cell.

Describe, with the help of a suitable circuit diagram, how the students may have determined *P* and *R*.

Use Fig. 18.2 to estimate the internal resistance *r* of the cell and discuss any limitations of the data plotted by the group.

STEMUP.CO.UK

[6]

STEMUP.CO.UK

14(a)

You are given an unmarked sealed square box which has four identical terminals at each corner.

Fig 4.1 shows the circuit diagram for the contents of the box with the four terminals labeled **A**, **B**, **C** and **D**.

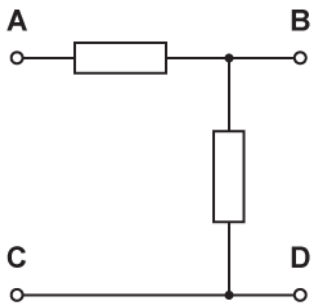

Fig. 4.1

One of the resistors in the box has resistance 220 Ω. The other resistor has resistance 470 Ω. Two of the terminals are connected by a wire.

The four terminals on your unmarked sealed box are **not** labelled.

You are given a 6.0 V d.c. supply, a 100 Ω resistor (labelled R) and a digital ammeter.

Plan an experiment to determine the arrangement of the components and identify which terminal of your unmarked sealed box is **A**, **B**, **C** and **D**.

A space has been left for you to draw circuit diagrams to illustrate your answer.

© OCR 2022. You may photocopy this page.

Created in ExamBuilder

STEMUP.CO.UK

STEMUP.CO.UK

[6]

STEMUP.CO.UK

(b) A light-dependent resistor (LDR) is connected between points **X** and **Y** in the circuit of Fig. 4.2. The circuit is used to switch on a lamp during the hours of darkness.

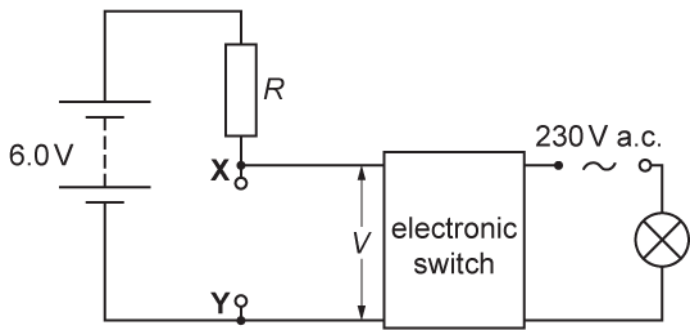

Fig. 4.2

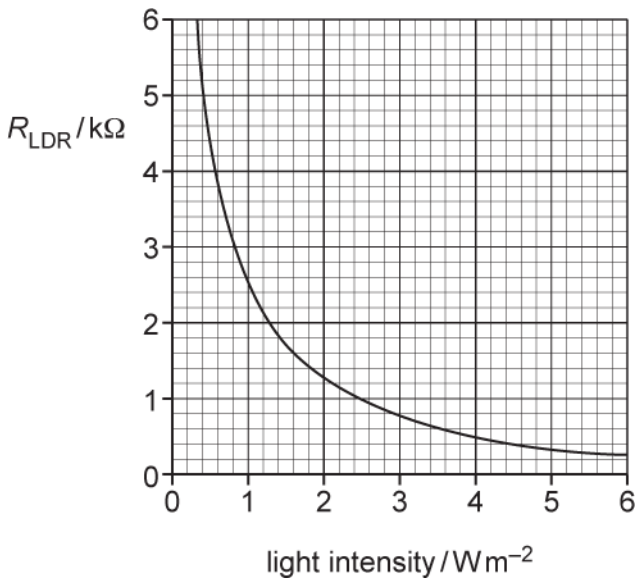

Fig. 4.3

(i) Draw the symbol for an LDR on Fig. 4.2 between **X** and **Y**. **[1]**

(ii) Fig. 4.3 shows how the resistance of the LDR varies with light intensity. The electronic switch closes when *V* across **XY** is 4.0 V and opens when *V* across **XY** is 2.4 V. The electronic switch draws a negligible current.

STEMUP.CO.UK

Calculate

1 the resistance R of the resistor for the lamp to switch on at a light intensity of 0.80 W m^{-2}

R = _____ Ω **[3]**

2 the light intensity of the surroundings at which the lamp switches off.

light intensity = _____ W m^{-2} **[2]**

STEMUP.CO.UK

15 Three resistors are connected in a circuit.

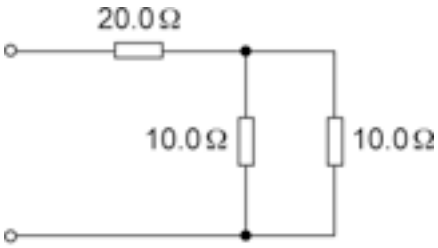

The resistance of each resistor is shown in the circuit diagram.

What is the total resistance of this circuit?

A 10.0 Ω
B 20.2 Ω
C 25.0 Ω
D 40.0 Ω

Your answer [1]

16 Three identical resistors **X**, **Y** and **Z** are connected to a power supply.

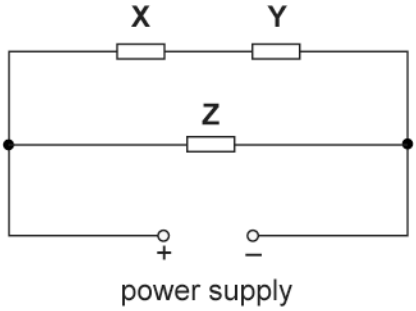

The power dissipated in the resistor **Z** is 24 W.

What is the power dissipated in the resistor **Y**?

A 6.0 W
B 12 W
C 24 W
D 48 W

Your answer [1]

STEMUP.CO.UK

17

Fig. 16.1 shows the *I-V* characteristics of two electrical components **L** and **R**.

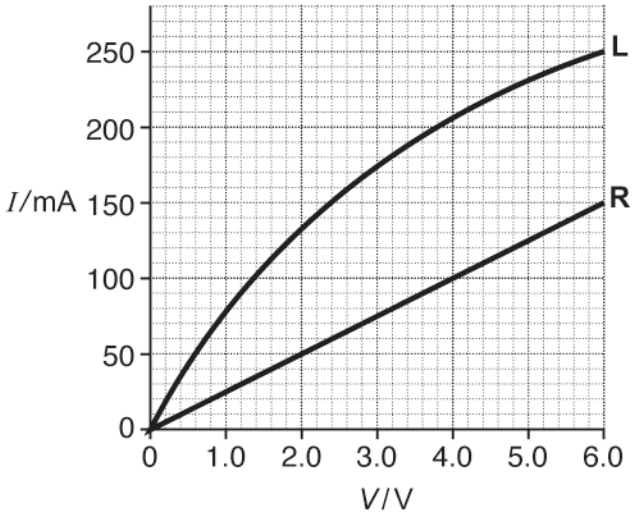

Fig. 16.1

The component **L** is a filament lamp and the component **R** is a resistor.

(i) Show that the resistance of **R** is 40 Ω.

(ii) Fig. 16.2 shows the components **L** and **R** connected in series to a battery of e.m.f. 6.0 V.

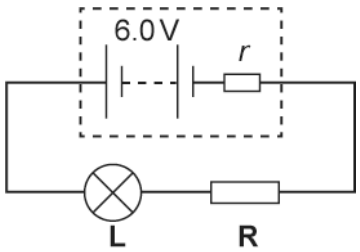

Fig. 16.2

The resistor **R** is a cylindrical rod of length 8.0 mm and cross-sectional area 2.4×10^{-6} m^2. The current in the circuit is 100 mA.

1 Use Fig. 16.1 to determine the internal resistance *r* of the battery.

STEMUP.CO.UK

r = ----------Ω **[3]**

2 Calculate the resistivity ρ of the material of the resistor **R**.

ρ = ---------- Ω m **[2]**

3 There are 6.5×10^{17} charge carriers within the volume of **R**.

STEMUP.CO.UK

Calculate the mean drift velocity v of the charge carriers within the resistor **R**.

v = ---------- m s^{-1} **[3]**

18 A metal circular plate is rotated at a constant frequency by an electric motor.

The plate has a small hole close to its rim.

Fig. 17.1 shows an arrangement used by a student to determine the frequency of the rotating plate.

STEMUP.CO.UK

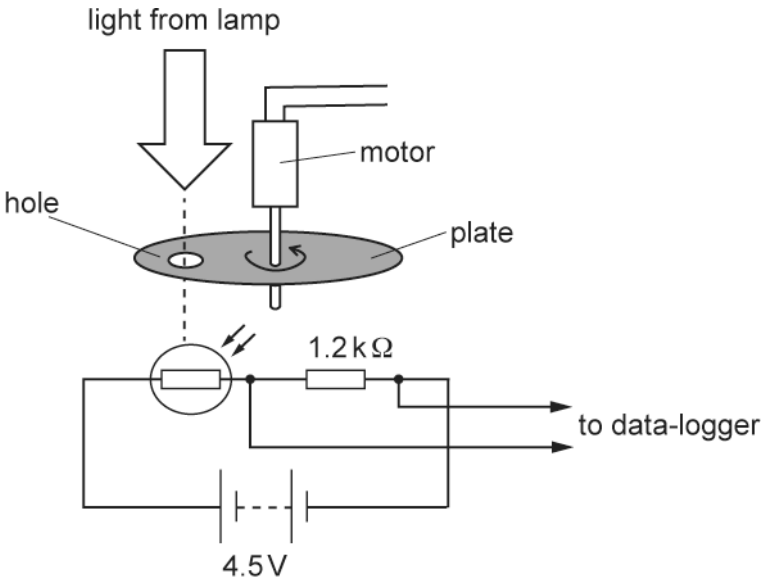

Fig. 17.1

A light-dependent resistor (LDR) and a fixed resistor of resistance 1.2 kΩ are connected in series to a battery. The battery has e.m.f. 4.5 V and has negligible internal resistance. The potential difference *V* across the resistor is monitored using a data-logger.

Fig. 17.2 shows the variation of *V* with time *t*.

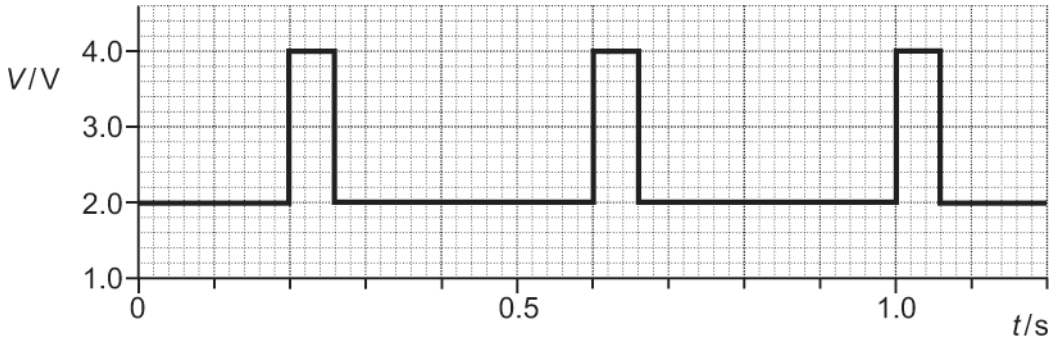

Fig. 17.2

Use your knowledge and understanding of potential divider circuits to explain the shape of the graph shown in Fig. 17.2. Include in your answer the maximum and minimum values of the resistance of the LDR.

Describe how the student can determine the frequency of the rotating plate.

STEMUP.CO.UK

[6]

19 A potential divider circuit is shown below.

STEMUP.CO.UK

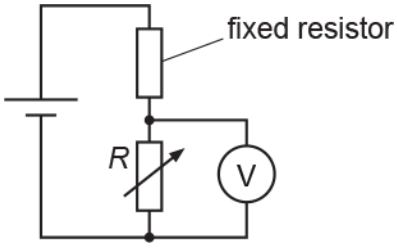

The resistance of the variable resistor is *R*. The potential difference across the variable resistor is *V*.

Which graph shows the correct variation with *R* of *V* ?

A

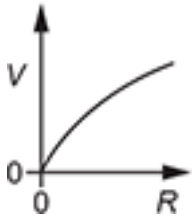

B

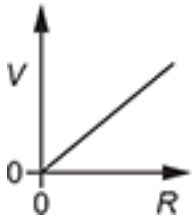

C

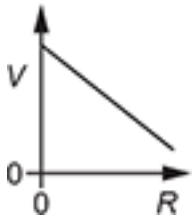

D

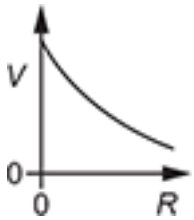

Your answer [1]

STEMUP.CO.UK

20(a) State Kirchhoff's second law **and** the physical quantity that is conserved according to this law.

---

[2]

(b) Fig. 18.1 shows a circuit used by a student to determine the resistivity of the material of a wire.

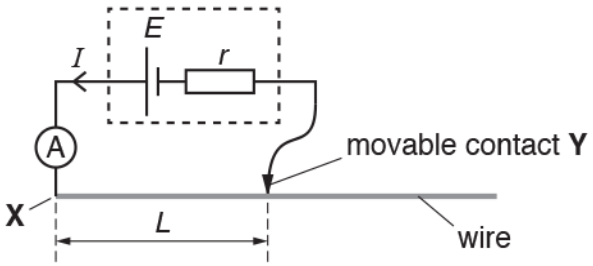

Fig. 18.1

The wire is uniform and has diameter 0.38 mm. The cell has electromotive force (e.m.f.) E and internal resistance r. The length of the wire between **X** and **Y** is L.

The student varies the length L and measures the current I in the circuit for each length.

Fig. 18.2 shows the data points plotted by the student.

STEMUP.CO.UK

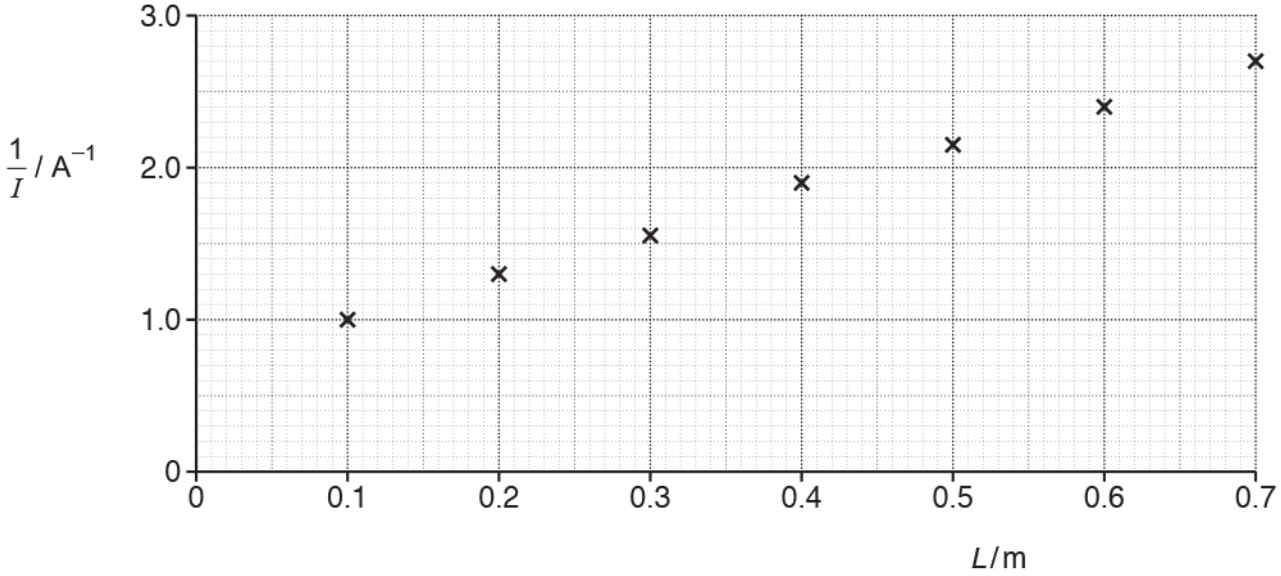

Fig. 18.2

(i) On Fig. 18.2 draw the straight line of best fit. Determine the gradient of this line.

gradient = ... A^{-1} m^{-1} **[2]**

(ii) Show that the gradient of the line is $\frac{\rho}{AE}$, where ρ is the resistivity of the material of the wire, A is the area of cross-section of the wire and E is the e.m.f. of the cell.

[2]

(iii) The e.m.f. E of the cell is 1.5 V. The diameter of the wire is 0.38 mm.

STEMUP.CO.UK

Use your answer to **(i)** and the equation given in **(ii)** to determine ρ.

ρ = ... Ωm **[2]**

(iv) Fig. 18.3 illustrates how the student had incorrectly measured all the lengths *L* of the wire.

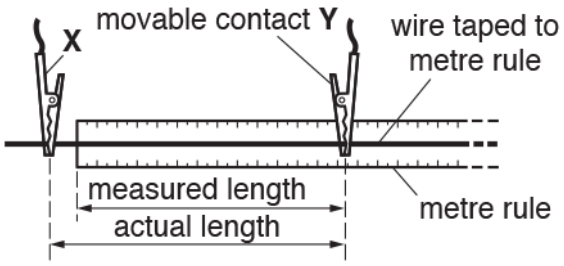

Fig. 18.3

According to the student, re-plotting the data points using the **actual** lengths of the wire will not affect the value of the resistivity obtained in **(iii)**.

Explain why the student is correct.

.....

.....

.....

..... **[2]**

STEMUP.CO.UK

21(a) Fig. 19.1 shows an electric circuit.

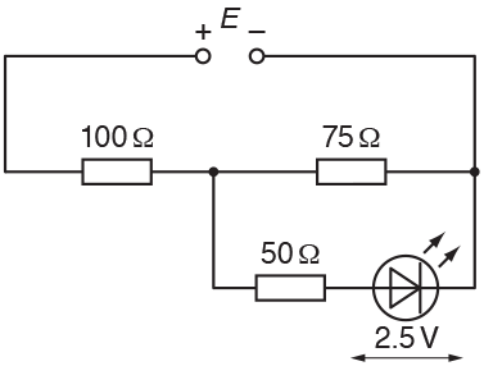

Fig. 19.1

The power supply has electromotive force (e.m.f.) *E* and negligible internal resistance.

The resistance values of the resistors are shown in Fig. 19.1. The *I*–V characteristic of the lightemitting diode (LED) is shown in Fig. 19.2.

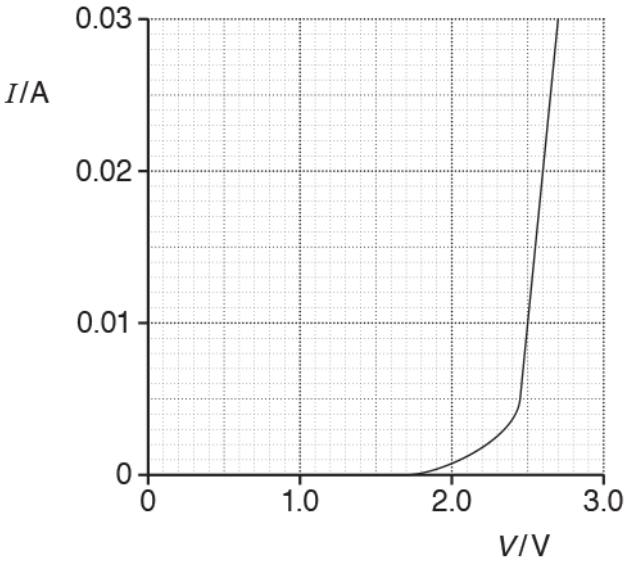

Fig. 19.2

The potential difference (p.d.) across the LED is 2.5 V.

Use Fig. 19.2 to show that the p.d. across the 50 Ω resistor is 0.50 V.

[2]

STEMUP.CO.UK

(b) Calculate the e.m.f. *E* of the power supply.

E = ...V **[3]**

STEMUP.CO.UK

22(a) A light-emitting diode (LED) emits red light when it is positively biased and has a potential difference (p.d.) greater than about 1.8 V.

An LED is connected into a circuit, as shown below.

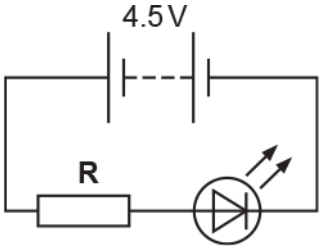

The battery has electromotive force (e.m.f.) 4.5 V and negligible internal resistance.
The resistor **R** has resistance 150 Ω.
Assume the p.d. across the LED is 1.8 V.

Calculate the ratio $\frac{\text{power dissipated by LED}}{\text{power dissipated by resistor}}$.

ratio = ... **[2]**

STEMUP.CO.UK

(b) The diagram below shows a circuit designed by a student.

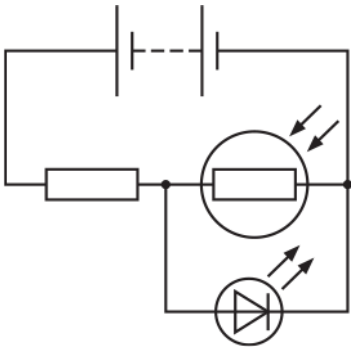

The LED is very close to, and facing the light dependent resistor (LDR).
The circuit is taken into a dark room.

(i) The student thought that the LED would switch on.
Instead, the LED was found to repeatedly switch on and off.

Explain this behaviour of the LED in this potential divider circuit.

---

[2]

(ii) Suggest a possible refinement so that the LED switches on permanently when taken into the dark room.

---

[1]

END OF QUESTION PAPER

STEMUP.CO.UK

Question			Answer/Indicative content	Marks	Guidance
1			A	1	
			Total	1	
2			D	1	
			Total	1	
3	a		p.d. across resistor = 1.50 – 0.62 = 0.88 (V) current = 0.88 / 120 = 7.33… × 10^{-3} (A) power = VI = 1.50 × 7.33 × 10^{-3} = 1.1 × 10^{-2} (W)	C1 C1 A1	
	b		The voltmeter has large or infinite resistance. Hence the p.d. across the lamp or current in the lamp is small or zero (and the lamp is not lit). Refining design: remove voltmeter from the circuit or place the voltmeter across the lamp.	B1 B1 B1	

© OCR 2022. You may photocopy this page.

Created in ExamBuilder

STEMUP.CO.UK

Question			Answer/Indicative content	Marks	Guidance
	c		* Level 3 (5–6 marks) Explanation is complete with E1, 2 and 3 For calculation expect C3 At least two limitations mentioned. *There is a well-developed line of reasoning which is clear and logically structured. The information presented is relevant and substantiated.* Level 2 (3–4 marks) Expect two points from E1, 2 and 3 Expect either C1 or C2 for the calculations Expect at least one limitation Limitation identified but calculations are inappropriate. *There is a line of reasoning presented with some structure. The information presented is in the most-part relevant and supported by some evidence.* Level 1 (1–2 marks) Expect at least one point from explanation Expect C1 and an attempt at C2 Limitations given are inappropriate. *The information is basic and communicated in an unstructured way. The information is supported by limited evidence and the relationship to the evidence may not be clear.* 0 marks No response or no response worthy of credit.	B1	Explanation (E) 1. Total resistance decreases as temperature increases (allow reverse argument) 2. Current in circuit increases as temperature increases or p.d. is in the ratio of the resistance values 3. Therefore, the p.d. across resistor increases or p.d. across thermistor decreases Calculations (C) 1. $I = V / R$ used to show current increases as temperature increases 2. Potential divider equation (or $I = V / R$ and $R = R_1 + R_2$) used to calculate the voltmeter reading at either 200 °C or 300 °C • V_{300} = 6.0 × 25/(25 + 500) = 0.29 V • V_{200} = 6.0 × 60 /(60 + 500) = 0.64 V) 3. Potential divider equation used to calculate the voltmeter reading at **both** 200°C and 300 °C Limitation (L) 1. The change in resistance is small when resistance of thermistor changes from 200 °C to 300 °C 2. Change in voltmeter reading is too small over this range 3. Non-linear change of resistance with temperature
			Total	12	
4			B	1	
			Total	1	
5			B	1	
			Total	1	
6			C	1	
			Total	1	

© OCR 2022. You may photocopy this page.

Created in ExamBuilder

STEMUP.CO.UK

Question			Answer/Indicative content	Marks	Guidance
7			D	1	
			Total	1	
8	a		current = $\frac{0.060}{2.4}$ or current = 0.025 (A) $R = \frac{6.0 - 2.4}{0.025}$ R = 140 (Ω)	C1 C1 A1	 **Note** answer to 3 sf is 144 Ω
	b		$I = Anev$ and $A = 2.0 \times 10^{-6}$ (m^2) $0.025 = 2.0 \times 10^{-6} \times 1.4 \times 10^{25} \times 1.60 \times 10^{-19} \times v$ $v = 5.6 \times 10^{-3}$ ($m\ s^{-1}$)	C1 C1 A1	 **Allow** any subject Possible ecf
	c		The current is constant, therefore $v \propto n^{-1}$. The mean drift velocity is therefore smaller.	M1 A1	
	d	i	With the variable resistor set at zero / close to zero, the p.d. across the resistor is zero / small, so p.d. across lamp is 2.4 V / large.	B1	
		i	With the variable resistor set at its maximum value, there is a p.d. across the variable resistor, so p.d. across the lamp is not small.	B1	
		ii	The lamp is connected to the slider contact of a potentiometer arrangement.	B1	
		ii	Ammeter and voltmeter connected correctly.	B1	
			Total	12	
9			D	1	
			Total	1	

STEMUP.CO.UK

Question			Answer/Indicative content	Marks	Guidance
10	a		$I = I_1 + I_2$ V is the same (for each resistor) $\frac{V}{R} = \frac{V}{R_1} + \frac{V}{R_2}$ leading to correct expression	M1 M1 A1	
	b	i	Correct circuit with a battery, potential divider, lamp and voltmeter. 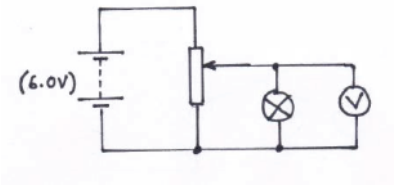 	B1	
		i	Correct symbols used for all components.	B1	**Allow**: A cell symbol for a battery
		ii	Description: The temperature of the filament increases. (AW)	B1	
		ii	The resistance of the lamp increases	M1	
		ii	from a non-zero value of resistance.	A1	**Allow** 'when cold the resistance is small'
		ii	Explanation: Resistance increases because electrons/charge carriers make frequent collisions with ions. (AW)	B1	
		iii	($P = VI$) current in **X** is 3 times the current in **Y** Or area of **X** is 4 times smaller than area of **Y**	C1	**Allow** other correct methods.
		iii	$I = Anev$ and ratio = $\frac{3}{0.25}$	C1	
		iii	ratio = 12	A1	
			Total	**12**	
11			**B**	**1**	
			Total	**1**	

STEMUP.CO.UK

Question			Answer/Indicative content	Marks	Guidance
12	a		Any <u>one</u> from: current, temperature, light intensity and amount of substance / matter	B1	**Not:** ampere, kelvin, candela and mole **Not** correct quantity with its unit, e.g. current in A or current (A) Examiner's Comment Most candidates could not state an unambiguous base quantity. There was no credit for a correctly named quantity accompanied by its S.I. unit, e.g. *'current in ampere'.* Some answers were just wrong; these include *force, charge, energy* and *kelvin.*
	b	i	$R = \frac{\rho L}{A}$ **and** $A = \pi\left(\frac{d}{2}\right)^2$ $R_X = \frac{4\rho L}{\pi d^2}$ and $R_Y = \frac{8\rho L}{\pi d^2}$ Clear steps leading to $R = \frac{12\rho L}{\pi d^2}$	M1 A1	Examiner's Comment Most candidates were familiar with the equations $R = \rho L / A$ and $A = \pi d^2/4$. The modal score here was two marks. Most scripts had well-structured answers and demonstrated excellent algebraic skills. A variety of techniques were employed to determine the total resistance of the two resistors in series.
		ii	1 Ruler / tape measure (for *L*) **and** micrometer (for *d*) 2 R = 2.3(4) (Ω) $\frac{0.1}{9.5}$ or $2 \times \frac{0.003}{0.270}$ $\frac{0.1}{9.5} + 2 \times \frac{0.003}{0.270}$ or 0.0327 or 3.27% absolute uncertainty in R = 0.0327 × 2.34 = 0.077 R = 2.3 ± 0.1 (Ω) 3 (The actual) R is large(r) **because** (the actual) d is small(er) or (the actual) A is small(er) or $R \propto 1/d^2$	B1 C1 C1 C1 A1 B1	**Allow** (vernier / digital) calipers or travelling microscope for micrometer **Allow** other correct methods for getting 2.3 ± 0.1 (Ω) **Allow** 2 or more sf for this C1 mark **Note** 0.0105 or 1.05% or 0.0222 or 2.22% scores this mark, allow 2sf or more **Allow:** 2.34 ± 0.08 (Ω) **Note** use of R_X or R_Y instead of R can score the second and third C1 marks only **Allow:** The calculated R is small(er) **because** (the measured) A is large(r) or $R \propto 1/d^2$

© OCR 2022. You may photocopy this page.

Created in ExamBuilder

STEMUP.CO.UK

Question			Answer/Indicative content	Marks	Guidance
					Examiner's Comment Almost all candidates correctly identified the measuring instrument for *L* and *d.* Some answers were spoilt by mentioning both a ruler and a micrometer for measuring the length of the wire. This question produced a range of marks and discriminated well. According to the data shown in the table on page 13, the final value for the resistance *R* had to be given to 2 significant figures (SF), but an answer to 3 SF was also allowed. Top-end candidates produced flawless answers and quoted *R* as either 2.3 ± 0.1 Ω or 2.34 ± 0.08 Ω. Some candidates successfully calculated the maximum and the minimum values for *R* and then the absolute uncertainty from half the range. The most common mistakes being made were: • Omitting the factor of 2 when determining the percentage uncertainty in d^2. • Calculating the resistance of either resistor **X** or resistor **Y**. • Inconsistency between *R* and its absolute uncertainty, e.g. *R* = 2.3 ± 0.077 Ω. Some candidates realised that the actual value of *R* would be *'larger because d was smaller or* $R \propto 1/d^2$'. On most scripts, it was difficult to follow if the resistance was the **actual** one or the **calculated** one.
			Total	9	

STEMUP.CO.UK

Question			Answer/Indicative content	Marks	Guidance
13	a	i	Resistance of parallel combination = 40 (Ω) $I = \frac{4.2 - 1.5}{40 + 33}$ *I* = 0.037 (A)	C1 C1 A1	Allow $(1/60 + 1/120)^{-1}$ Allow 2 marks for $I = \frac{4.2 + 1.5}{40 + 33} = 0.078$ (A) Examiner's Comment The success in this question hinged on understanding the effect of two opposing e.m.f.s in a circuit and determining the total resistance of the circuit. About a third of the candidates produced well-structured and reasoned answer leading to the correct current of 0.037 A. Most candidates picked up a mark for determining the total resistance of the two parallel resistors (40 Ω). The total e.m.f. in the circuit is 2.7 V and the total resistance is 73 Ω. Those using a total e.m.f. of 5.7 V ended up with the incorrect current of 0.078 A; two marks were awarded for this answer. A small number of candidates tried to calculate the current using either using 1.5 V or 4.2 V or 33 Ω.

© OCR 2022. You may photocopy this page.

Created in ExamBuilder

STEMUP.CO.UK

Question			Answer/Indicative content	Marks	Guidance
		ii	Any <u>two</u> from: The current decreases up to 1.5 V The current is zero at 1.5 V The current changes direction / is negative when < 1.5 V The current increases below 1.5 V	B1×2	Allow 'current is zero when the e.m.f.s are the same' Examiner's Comment Most of the answers here showed poor understanding of the circuit in Fig. 18.1. Nothing could be awarded for vague answers such as *'current decreases because $I \propto V$* or *'e.m.f. decreases so current decreases'.* The current decreases as the e.m.f. of the supply approaches 1.5 V, at 1.5 V the current is zero, the direction of the current reverses and its magnitude increases when the e.m.f. of the supply gets below 1.5 V. About a quarter of the candidates gave credible answers.
	b		Level 3 (5-6 marks) Clear description including a reasonable estimate of *r* and clear limitations *There is a well-developed line of reasoning which is clear and logically structured. The information presented is relevant and substantiated.* Level 2 (3-4 marks) Some description with an attempt to estimate *r* and some limitations *There is a line of reasoning presented with some structure. The information presented is in the most part relevant and supported by some evidence.* Level 1 (1 -2 marks) Limited description *There is an attempt at a logical structure with a line of reasoning. The information is in the most part relevant.* 0 marks	B1×6	Use level of response annotations in RM Assessor, e.g. L2 for 4 marks, L2` for 3 marks, etc. Indicative scientific points may include: Description and estimation • Correct circuit with (variable) resistor, ammeter and voltmeter • Correct symbols used for all the components • *R* changed to get different values for *P* • $R = V / I$ (using ammeter and voltmeter readings) or *R* measured directly using an ohmmeter with the variable resistor isolated from the circuit or *R* read directly from a resistance box • Power calculated using $P = V^2/R$ or $P = VI$ or $P = I^2R$ • The value of *r* is between 1.0 to 3.0 Ω • A smooth curve drawn on Fig. 18.2 (to determine *r)* • A better approximation from sketched graph or *r* is between 1.5 and 2.7 Ω • Any attempt at using $E = V + Ir$, with or without the power equation(s) to determine *r* - even if the value is incorrect Limitations

STEMUP.CO.UK

Question			Answer/Indicative content	Marks	Guidance
			No response or no response worthy of credit.		• 'More data' required • Data point necessary at R = 2.0 Ω / More data (points) needed between 1 to 3 Ω • No evidence of averaging / Error bars necessary (for both P and R values) Examiner's Comment This was a level of response (LoR) question had three ingredients - drawing a viable circuit diagram that would enable the data shown in Fig.18.2 to be reproduced, using the figure to estimate the internal resistance of the cell and finally outlining any limitations of the data displayed in the figure. There is no one perfect model answer for a level of response question. A variety of good answers did score top marks. Most circuit diagrams were correct and well-drawn. There was the occasional mistake with the circuit symbol for a variable resistor; the thermistor symbol was a regular substitute. Most candidates drew a smooth curve on Fig. 18.2 and used this to estimate the internal resistance of the cell. Many also realised that the data points showed no evidence of averaging or error bars and that there were missing data points between 1.0 Ω and 3.0 Ω. Some candidates wanted *'more data points spaced regularly at interval of 0.5* Ω', which was a sensible suggestion. Some weaker candidates attempted to draw a straight line of best-fit through the data points and then tried to determine the internal resistance from the gradient. There was a good spread of marks amongst the three levels.
			Total	11	

STEMUP.CO.UK

Question			Answer/Indicative content	Marks	Guidance
14	a		Level 3 (5 – 6 marks) Clear planning and correct identification of terminals and position of components *There is a well-developed line of reasoning which is clear and logically structured. The information presented is clear relevant and substantiated.* Level 2 (3 – 4 marks) Clear planning and correct identification of some components / terminals *There is a line of reasoning presented with some structure. The information presented is in the most part relevant and supported by some evidence.* Level 1 (1 – 2 marks) Some planning and / or an attempt at identifying component / terminals *There is an attempt at a logical structure with a line of reasoning. The information is in the most part relevant.* 0 marks *No response or no response worthy of credit.*	B1 × 6	Use level of response annotations in RM Assessor, e.g. L2 for 4 marks, L2^ for 3 marks, etc. Indicative scientific points may include: Planning • suitable circuit arrangements / diagrams drawn between two points which could be connected to the box terminals • use of R to limit current, e.g. to find CD terminals • logical plan of connection across terminals e.g. connect circuit to each pair of terminals in turn • identify terminals C and D as the circuit with the largest current / smallest resistance • A and B identified because CD known **or** the circuit including terminals AC / D has the smallest current / largest resistance Identifying • $V = IR$ quoted or used in calculations • $R_T = \Sigma R$ used to determine the 220Ω or the 470Ω resistors • For 220 Ω resistor (between AB or BC / D) current is 27 (mA) A **or** 19 (mA) with R • For 470 Ω resistor (between AB or BC / D) current is 13 (mA) **or** 11 (mA) with R • For both resistors (between AC / D) current is 8.7 (mA) **or** 7.6 (mA) with R • For wire (between CD) current is 0.060 A Examiner's Comments This level of response (LoR) question had two strands – planning how to determine the positioning of two resistors inside an unlabelled four terminal box and then verifying the values of their resistances.

© OCR 2022. You may photocopy this page.

Created in ExamBuilder

STEMUP.CO.UK

Question			Answer/Indicative content	Marks	Guidance
					Some candidates concentrated on determining the labelling of the terminals; others assumed the positions and explained how the resistances could be determined. Many candidates made the task more difficult than necessary. For example it was intended that once terminals **C** and **D** had been identified, **C** could only be lower left and not lower right, and hence the positions of **A** and **B** were also identified. A very common circuit used to determine the resistances placed the supply between **A** and **C** with the given resistor **R** between **B** and **D,** leading to calculations requiring combinations of resistors in series and parallel. Many ignored the limiting resistor **R** and probed the box without it, a few stating that the current between **C** and **D** would be zero with the supply across **CD.** Some answers lacked any circuit diagram and some 15% failed to attempt the question. Weaker candidates were confused as to when the resistors were connected in series or in parallel. Generally, the responses were clearer in terms of planning than identifying. Comments such as *and then you can work out the arrangement of the resistors* were common without showing how this could be done. A small number of candidates introduced a voltmeter and others wanted to position the ammeter 'inside' the box.
	b	i		B1	two arrows needed **not** across resistor; allow a surrounding circle with arrows outside circle

STEMUP.CO.UK

Question			Answer/Indicative content	Marks	Guidance
		ii	1 from graph 3.0 (kΩ) I = 4.0 / 3.0 = 1.33 × 10^{-3} A or R = 2.0 / 4.0 × 3.0 × 10^{3} R = (6.0 – 4.0) / 1.33 × 10^{-3} = 1.5 × 10^{3} (Ω) 2 at 2.4 V R_{LDR} = 1.0 kΩ giving 2.5 (W m^{-2})	B1 C1 A1 M1 A1	**allow** 3.1 ± 0.1 (kΩ) **accept** 1.3 mA; **accept** potential divider argument **allow** 1.5 kΩ; **special case:** using 2.4 V in place of 4.0 V gives R = 4.5 kΩ; give 1 mark out of 2 **ecf (b)(ii); allow** potential divider or I = 2.4 mA; **for special case:** R_{LDR} = 9.0 kΩ ; give 1 mark out of 2 allow 2.4 to 2.6 W m^{-2} **N.B. remember to record a mark out of 5 here** Examiner's Comments More than half of the candidates knew the correct circuit symbol for an LDR. The most common error was to draw an LED. More candidates used a potential divider approach to solve the problem than calculated the current in the circuit; many gaining full marks. Those who misread the question and reversed the voltages required to switch the lamp on and off were given some credit for their answers.
			Total	12	
15			C	1	<u>Examiner's Comments</u> This was a well-answered question with most candidates demonstrating excellent knowledge of resistors in series and parallel combination. On many scripts, there was hardly any working shown. The two 10.0 Ω resistors in parallel gave a combined resistance of 5.0 Ω. This added to the series resistor of 20.0 Ω gives the correct answer of 25.0 Ω. The most popular distractor was **D** – where all the resistance values were simply added together.
			Total	1	
16			A	1	
			Total	1	

© OCR 2022. You may photocopy this page.

Created in ExamBuilder

STEMUP.CO.UK

Question			Answer/Indicative content	Marks	Guidance
17		i	$(R =) \frac{6.0}{0.150}$ $R = 40\ \Omega$	M1 A0	**Allow** any correct value of V (± 0.1 V) divided by the correct value of I (± 10 mA) from the straight line for **R** <u>Examiner's Comments</u> The majority of the candidates scored 1 mark here for clearly using the graph to show the resistance of **R** to be 40 Ω. Most used a data point from the straight line. A significant number also used the idea that the gradient of the straight line is equal to the inverse of the resistance. However, candidates are reminded that resistance is equal potential difference divided by current, but in this context of a straight line through the origin, determining resistance from the gradient was allowed. Of course, determining the gradient of a curve is simply incorrect physics for determining resistance.
		ii	(V_L =) 1.4 (V) **or** (V_R =) 4.0 (V) **or** (R_T =) 6.0/0.1 (Ω) ($V_{terminal}$ =) 5.4 (V) **or** (V_r =) 0.6 (V) **or** (r =) 60 – 54 (Ω) r = 6.0 (Ω)	C1 C1 A1	**Allow** full credit for other correct methods Possible ECF from **(i)** **Allow** ± 0.1 V for the value of p.d. from the graph **Note** getting to this stage will also secure the first C1 mark **Allow** 1 SF answer here without any SF penalt <u>Examiner's Comments</u> This was a discriminating question with many of the top-end candidates effortless getting the correct answer of 6.0 Ω for the internal resistance r. The most common error was omitting the resistance of the filament lamp in the calculation. This gave an incorrect value of 20 Ω for the internal resistance. Candidates doing this still managed to pick up 1 mark for the total resistance of 60 Ω.

STEMUP.CO.UK

Question			Answer/Indicative content	Marks	Guidance
		iii	$\rho = \frac{40 \times 2.4 \times 10^{-6}}{8.0 \times 10^{-3}}$ (Any subject)	C1	Allow ECF
			ρ = 0.012 (Ω m)	A1	Allow 1 mark for either 0.018 for using 60 Ω, 0.016(2) for using 54 Ω or for 0.0018 for 6.0 Ω <u>Examiner's Comments</u> The success in this question depended on understanding the term *n* in the equation *I* = *Anev* given in the Data, Formulae and Relationship booklet. A significant number of candidates took *n* to be the total number of charge carriers within the volume of **R**, instead of the number of charge carriers per unit volume (number density). Those who appreciated this had no problems coping with prefixes and powers of ten. The correct answer was 7.7×10^{-3} m s^{-1}. Using 6.5×10^{17} for the number density, gave an answer of 4.0×10^{5} m s^{-1}; examiners credited 1 mark for this incorrect answer, mainly for the manipulating and using the equation *I* = *Anev*. **Exemplar 6** 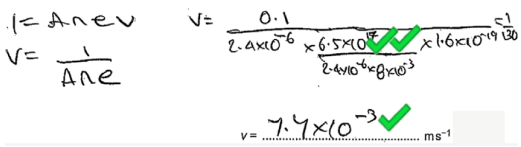 This exemplar illustrates a perfect answer from a C-grade candidate. The equation has been rearranged correctly and the substitution is all correct and easy to follow. The number density *n* has not been calculated separately – it forms an integral part of the whole calculation. The one big benefit of this is that you do not end up with rounding errors. A decent technique demonstrated here. All correct for 3 marks.

STEMUP.CO.UK

Question			Answer/Indicative content	Marks	Guidance
		iv	$n = \frac{6.5 \times 10^{17}}{2.4 \times 10^{-6} \times 0.008}$ or $n = 3.385 \times 10^{25}$ (m^{-3})	C1	
			$v = \frac{0.100}{2.4 \times 10^{-6} \times 3.385 \times 10^{25} \times 1.60 \times 10^{-19}}$ (Any subject)	C1	**Note** do not penalise again for the same POT error
			$v = 7.7 \times 10^{-3}$ ($m\ s^{-3}$)	A1	**Allow** 1 mark for 4(.0) × 10^{5} ($m\ s^{-1}$); $n = 6.5 \times 10^{17}$ used
			Total	9	

STEMUP.CO.UK

Question			Answer/Indicative content	Marks	Guidance

18			**Level 3 (5–6 marks)**
			Clear explanation, some description **and** both resistance values correct
			
			There is a well-developed line of reasoning which is clear and logically structured. The information presented is relevant and substantiated.
			
			Level 2 (3–4 marks)
			Some explanation, limited or no description **and** both resistance values correct
			OR
			Clear explanation, limited or no description **and** calculations mostly correct / one correct calculation
			OR
			Clear explanation, some description **and** no calculations
			
			There is a line of reasoning presented with some structure. The information presented is in the most-part relevant and supported by some evidence.
			
			Level 1 (1–2 marks)
			Some explanation
			OR
			Some description
			OR
			Some calculation
			
			There is an attempt at a logical structure with a line of reasoning. The information is in the most part relevant.
			
			0 marks
			No response or no response worthy of credit
				B1 × 6	**Indicative scientific points may include:**
					
					Explanation of trace
					
					• The 'trace' is because of light reaching and not reaching LDR
					• Resistance of LDR varies with (intensity) of light
					• In light
					  ◦ resistance of LDR is low
					  ◦ p.d. across LDR is low
					  ◦ p.d across resistor (or *V*) is high
					  ◦ current in circuit is large
					• In darkness
					  ◦ resistance of LDR is high
					  ◦ p.d. across LDR is high
					  ◦ p.d across resistor (or *V*) is low
					  ◦ current in circuit is small
					• V_{max} = 4.0 V; V_{min} = 2.0 V
					• Potential divider equation quoted
					• Substitution into potential divider equation
					
					Description of determining frequency
					
					• Time between pulses is constant because of constant speed
					
					• Time between pulses = 0.4 (s)
					• $f = 1/T$
					• frequency = 2.5 (Hz)
					
					Calculations
					
					• Resistance of LDR is 150 (Ω) in light
					• Resistance of LDR is 1500 (Ω) in darkness
					
					<u>Examiner's Comments</u>
					
					This was one of the two LoR questions. It required understanding of potential dividers, light-dependent resistor and rotation frequency of a spinning plate.
					
					Examiners expect varied responses, and two very dissimilar answers can score

STEMUP.CO.UK

Question			Answer/Indicative content	Marks	Guidance
					comparable marks as long as the criteria set out in the answers' section of the marking scheme are met. Level 3 answers had the correct maximum and minimum resistance values of the LDR, a decent description and explanation of the trace shown in Fig. 17.2, and an outline of how the frequency of the spinning plate was determined. As mentioned earlier, eclectic answers are inevitable – verbose and concise answers can be at Level 3. In Level 2 answers there were generally missed opportunities. Half-done calculation and descriptions either with some errors or lacking in depth. Level 1 answers had some elements of calculations or descriptions. The two exemplars below, illustrate a Level 3 response and a Level 1 response. **Exemplar 7** When the hole in the metal plate is directly above the LDR, light shines the LDR. This causes the resistance on the LDR to decrease. This means that the total resistance of the circuit decreases, so the current flowing in the circuit increases. As the resistance of the fixed resistor is constant and current increases, the p.d. across it (V) must increase, by $V = IR$. This can also be shown using the potential divider equation: $V_{out} = \frac{R_2}{R_1 + R_2} \times V_{in}$, where V_{out} is the p.d. across the fixed resistor (V). We can rearrange this equation to find the resistance of the LDR both when light is and isn't shining on it. For when light isn't shining on it: $(2.0) = \frac{(1.2\times10^3)}{R_{max} + (1.2\times10^3)} \times (4.5) \Rightarrow R_{MAX} = 1500\Omega$ For when light is shining on it: $(1.0) = \frac{(1.2\times10^3)}{R_{MIN} + (1.2\times10^3)} \times (4.5)$, $R_{MIN} = 150\Omega$ The frequency can be found by first finding the period, T. This is the time taken for the voltage p.d. (V) to return to the same value. This is $T = 0.4s$. Finally the inverse of this will give the frequency $f = 1/T = \frac{1}{0.4} = 2.5Hz$. 13 This is a Level 3 response from a top-end candidate who scored 6 marks. The description of the variation of the resistance of the LDR, the circuit current and the potential difference across the fixed resistor is perfect. The calculations of

STEMUP.CO.UK

Question			Answer/Indicative content	Marks	Guidance
					the LDR resistances are nicely embedded into the general explanation. The calculation of the frequency is all correct. This is a model answer for 6 marks. Compare and contrast this with the Level 1 response below. **Exemplar 8** When the light shines through the hole onto the LDR, the resistance decreases, causing the pd across the fixed resistor to increase., and vice versa when the light is blocked again. Determine the frequency by seeing how long the plate takes to rotate, so from pd increase to pd increase, 0·4 seconds frequency = $\frac{1}{T}$ frequency = 2·5 L1 This is a Level 1 response from an E-grade candidate. The description of the variation of the resistance of the LDR is correct. However, there are no calculations of the resistance of the LDR, as required in the question. Hence, a significant part of the question has been omitted. According to the marking criteria, this could only score Level 1. The examiner credited 2 marks for this response.
			Total	6	

© OCR 2022. You may photocopy this page.

Created in ExamBuilder

STEMUP.CO.UK

Question			Answer/Indicative content	Marks	Guidance
19			A	1	<u>Examiner's Comments</u> This is a question on a potential divider circuit and a sketch of the correct *V*-*R* graph. Unfortunately, the distractor **B** was a bit too strong. **A** is the correct sketch. When $R = 0$, V had to be zero too. Most candidates did write down the correct potential divider expression for V, but then did not acknowledge that V cannot be directly proportional to R – the straight-line graph through the origin could not be the correct answer. It was a choice between **A** or **B**, and by the brief reasoning above, the answer had to be **A**.
			Total	1	

© OCR 2022. You may photocopy this page.

Created in ExamBuilder

STEMUP.CO.UK

Question			Answer/Indicative content	Marks	Guidance
20	a		Sum of e.m.f(s) is equal to the sum of p.d.(s) (in a loop of a circuit) Energy is conserved	B1 B1	**Allow** total / ∑ instead of 'sum' **Allow** voltage instead of p.d. **Not** ….sum of *IR* ….., unless *I* and *R* are defined Expect 'sum' at least once in the statement **Not** $\sum E = \sum V$, unless *V* and *E* are defined <u>Examiner's Comments</u> Many candidates jumbled up the first and second laws, but most candidates gave perfect answers. It was quite common to see hybrid statements such as *'sum of e.m.f.s at a point = sum of p.d.s coming out of the same point'*. Most did know that energy was conserved, but other incorrect suggestions were *charge, current and voltage*. The question discriminated well and rewarded those candidates that had learnt their definitions.
	b	i	Line of best fit drawn gradient = 2.8	B1 B1	Expect the extrapolated line to have a y-intercept in the range 0.60 to 0.85 **and** at least one data point on each side of the line **Allow** gradient of line in the range 2.60 to 3.00 <u>Examiner's Comments</u> In **(c)(i)**, the lines of best fit were generally very good, as were the gradient calculations with most candidates getting values in the range 2.60 to 3.00. Only a small number of candidates calculated the inverse of the gradient.

© OCR 2022. You may photocopy this page.

Created in ExamBuilder

STEMUP.CO.UK

Question			Answer/Indicative content	Marks	Guidance
		ii	$E = I(r + R)$ and $R = \rho L/A$ $\frac{1}{I} = \frac{r}{E} + \frac{\rho}{AE}L$ (and comparison with $y = mx + c$ leads to gradient $\frac{\rho}{AE}$)	C1 A1	Allow $E = V + IR$ and $R = \rho L/A$ <u>Examiner's Comments</u> Most candidates struggled with **(c)(ii)**. Less than 1 in 10 candidates successfully used the equations $E = V + Ir$ and $R = \frac{\rho L}{A}$ to derive the expression $\frac{1}{I} = \frac{\rho}{AE}L + \frac{r}{E}$, and then identified the gradient as $\frac{\rho}{AE}$ by comparison with the equation for a straight-line $y = mx + c$.
		iii	(ρ = gradient × AE) $\rho = 2.8 \times \pi \times (0.19 \times 10^{-3})^2 \times 1.5$ $\rho = 4.8 \times 10^{-7}$ (Ω m)	 C1 A1	Possible ECF from **(i)** **Note** not using $A = \pi r^2$ is wrong physics (XP) **Allow** 1 mark for 1.9×10^{-6}, diameter used instead of radius <u>Examiner's Comments</u> Most candidates in **(c)(iii)** did exceptionally well to calculate the resistivity using the equation for the gradient. Calculations were generally well-structured, and the final answer showed good use of powers of ten and significant figures.

© OCR 2022. You may photocopy this page.

Created in ExamBuilder

STEMUP.CO.UK

Question			Answer/Indicative content	Marks	Guidance
		iv	The graph / points just shift horizontally (AW) The gradient is unchanged (and *ρ* will be the same)	B1 B1	**Allow** shifted to the right or left / 'systematic error' / zero error / change in length stays the same / 'no change in vertical values' <u>Examiner's Comments</u> Finally, **(c)(iv)** provided good discrimination with many of the top end candidates realising the gradient of the line was unaffected, the line was just shifted horizontally. 'Systematic error' and 'zero error' were allowed as alternative answers for the horizontal translation of the line. **Misconception** There were some missed opportunities, with some candidates making the following mistakes. • In **(c)(ii)**, ignoring the internal resistance *r* of the cell shown in the circuit of **Fig. 18.1** to get the wrong expression $\frac{1}{I} = \frac{\rho}{AE}L$ • In **(c)(iii)**, a small number of candidates either used 0.38 mm as the radius of the wire to get a resistivity of 1.9×10^{-6} Ω m or forgot to convert the millimetres into metres to get a value of 0.48 Ω m. • In **(c)(iv)**, a significant number of low-end candidates, mentioned that resistivity of the wire did not depend on its physical dimensions, and therefore the resistivity value calculated will be the same. There was no reasoning in terms of gradient = $\frac{\rho}{AE}$
			Total	**10**	

© OCR 2022. You may photocopy this page.

Created in ExamBuilder

STEMUP.CO.UK

Question			Answer/Indicative content	Marks	Guidance
21	a		current = 0.01 (A) p.d. = 0.01 × 50 (= 0.50 V)	M1 A1	<u>Examiner's Comments</u> This was an accessible question on determining the p.d. across the LED using the data from **Fig. 19.2**. The universal approach was short and precise: V = 0.01 × 50 = 0.50 V. However, a significant number of candidates used a longer route involving the potential divider rule and the 250 Ω resistance of the LED.
	b		(V_{75} =) **0.5 + 2.5** (V) **or** (R_{LED}) = **250** (Ω) **or** (R_p =) **60** (Ω) (I_{100} =) **0.05** (A) (E = 3.0 + 0.05 × 100) E = 8.0 (V)	C1 C1 A1	**Allow** other correct methods **Note** there is no ECF from (**a**) **Allow** 1 SF for the p.d. of 3 (V) There is no ECF here from wrong physics (XP) from the parallel network **Allow** 1 SF answer of 8 <u>Examiner's Comments</u> The analysis of the circuit proved to be problematic with most of the candidates getting as far as calculating either the resistance of the LED as 250 Ω or the p.d. across the LED-50 Ω resistor combination as 3.0 V. The stages thereafter demonstrated all the usual misconceptions; these are summarised later. About a quarter of the candidates produced flawless solutions using a range of techniques from Kirchhoff's two laws to potential dividers. The simplest solution had the correct current of 0.050 A in the 100 Ω resistor, followed by the correct value of the e.m.f. of 8.0 V. This type of solution is shown in exemplar 7. **Misconception** These were the most common errors made in calculating the e.m.f. of the power supply.

© OCR 2022. You may photocopy this page.

Created in ExamBuilder

STEMUP.CO.UK

Question			Answer/Indicative content	Marks	Guidance
					• Calculating the total resistance of the parallel network by omitting the resistance of the LED. • The current in the 100 Ω resistor was the same as the current of 0.010 A in the LED. • The current in the 100 Ω resistor was the same as the current of 0.040 A in the 75 Ω resistor. • Using the potential divider equation by completely omitting the LED-50 Ω resistor series network. Exemplar 7 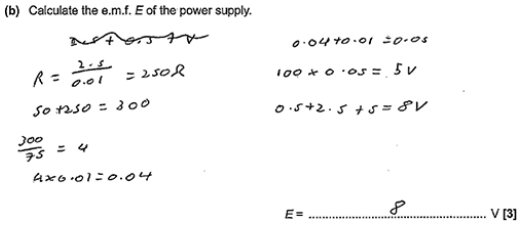 (b) Calculate the e.m.f. *E* of the power supply. $R = \frac{2.5}{0.01} = 250\Omega$ $50 + 250 = 300$ $\frac{300}{75} = 4$ $4 \times 0.01 = 0.04$ $0.04 + 0.01 = 0.05$ $100 \times 0.05 = 5V$ $0.5 + 2.5 + 5 = 8V$ *E* = 8 V [3] This exemplar shows a perfect response from a middle-grade candidate. The response should have been written to 2 SF. However, because the answer was 8.0 V, a 1 SF response was allowed without incurring any penalty.
			Total	5	

© OCR 2022. You may photocopy this page.

Created in ExamBuilder

STEMUP.CO.UK

Question			Answer/Indicative content	Marks	Guidance
22	a		(V_R =) 2.7 (V) **or**(current =) 0.018 (A) (ratio = $\frac{0.018 \times 1.8}{0.018 \times 2.7}$) ratio = 0.67	C1 A1	**Note** the mark can be scored on circuit diagram **Note** values of powers are: 0.0324 W and 0.0486 W **Allow** 2/3; **Not** 0.66 (rounding error)
	b	i	In darkness LDR has more resistance / p.d. across LDR is large **or** In light LDR has less resistance / p.d. across LDR is small Clear idea that when the LED is on, this will force the p.d. across LED / LDR to decrease, forcing the LED to switch off (ORA) (The cycle of LED switching on and off is repeated)	B1 B1	 Note the explanation must be in terms of p.d. / potential divider. **Ignore** current
		ii	A sensible suggestion, e.g. Point the LED away from the LDR / increase distance (between LED and LDR) / insert a card between (LED and LDR)	B1	
			Total	5	

STEMUP.CO.UK