OCR A-LEVEL PHYSICS A · H556

PHYSICS

EXAM QUESTION PACK

4.2 ENERGY, POWER AND RESISTANCE

SCORE	PERCENTAGE
/181	%

STEMUP

These questions belong to OCR, not to us.

The examination questions, mark schemes and examiner comments in this pack were written and published by OCR. They are past assessment materials, reproduced here so that students can revise from them.

What we do not own

STEMUP is not affiliated with OCR and does not own, and makes no claim to own, any of the question, mark scheme or examiner report material in this pack. OCR has not endorsed, approved or been involved in the production of it. OCR and the qualification titles used here belong to their respective owners and appear for identification only.

Where to find the originals

OCR publishes its past papers, mark schemes and examiner reports free of charge. Always check the current specification at ocr.org.uk before you revise, because content and wording can change between series.

If you hold the rights to any material in this pack and would like it amended or removed, contact admin@stemup.co.uk and we will act on it.

1 The p.d. across a resistor is 12 V. The power dissipated is 6.0 W.

Which statement is correct?

A The charge passing through the resistor in one second is 2.0 coulomb.
B The resistor transfers 6.0 joule for each coulomb passing through the resistor.
C The resistor transfers 12 joule in 2.0 second.
D The resistor dissipates 6.0 joule when the current is 2.0 ampere.

Your answer ☐

[1]

2 A 14 V d.c. supply is used to charge a 12 V car battery of internal resistance 0.80 Ω for 6.0 hours. The current in the circuit is 2.5 A.

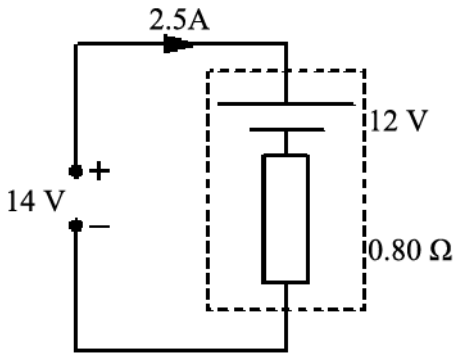

How much electrical energy is provided by the charging supply?

A 13 kJ
B 110 kJ
C 650 kJ
D 760 kJ

Your answer ☐

[1]

STEMUP.CO.UK

3(a) A student uses the circuit shown in **Fig. 16.1** to determine the resistivity of a metal in the form of a wire.

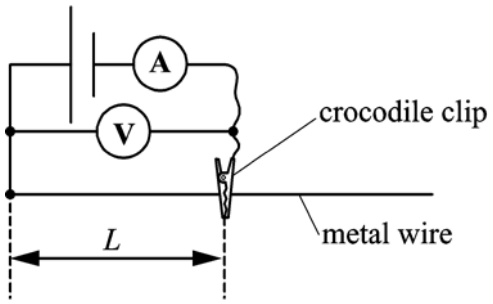

Fig. 16.1

The length *L* of the wire is changed with the help of a crocodile clip. The current in the wire is *I*, the p.d. across the wire is *V* and the wire has resistance *R*.

The table in **Fig. 16.2** shows the results recorded by the student from the experiment.

L / *m*	*V* / *V*	*I* / A	*R* / Ω
0.050	0.40	0.160	2.50
0.200	0.40	0.140	2.86
0.400	0.40	0.072	
0.800	0.40	0.036	11.1
1.000	0.40	0.029	13.8

Fig. 16.3 shows the graph of *R* against *L* for this wire.

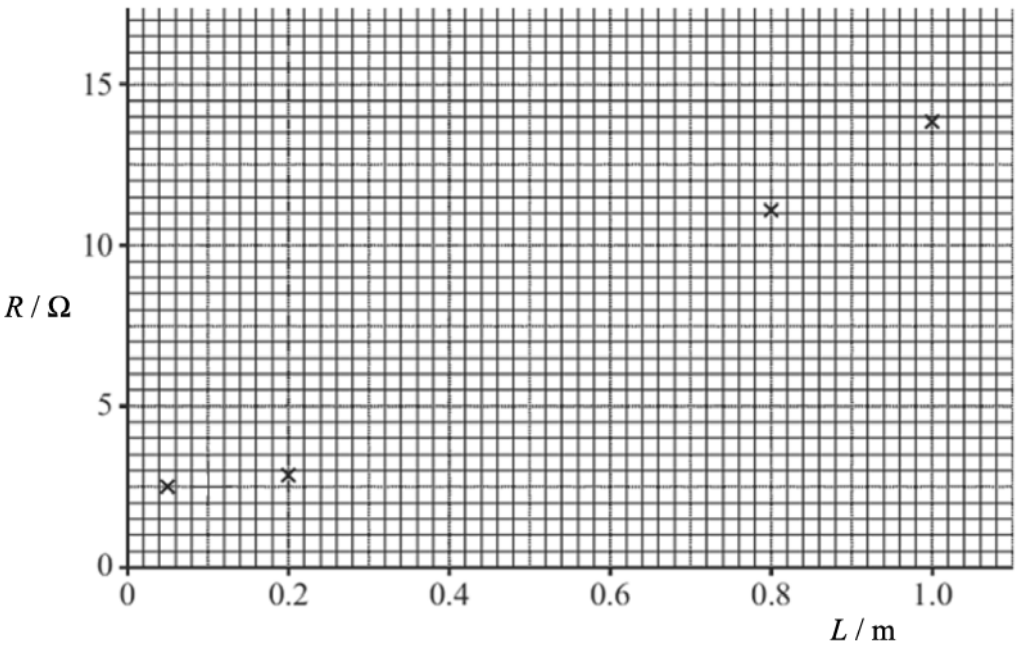

Fig. 16.3

STEMUP.CO.UK

Complete the table by calculating the resistance of the wire of length 0.400 m. On **Fig. 16.3** plot the data point corresponding to this length.

[1]

(b) The student observed that the wire was significantly hotter when the shortest length L = 0.050 m was used. The cross-sectional area of the wire is $8.0 \times 10^{-8}\ \mathrm{m}^2$.

Use **Fig.16.3** to determine the resistivity of the metal.

resistivity = _____ Ωm **[3]**

(c) The voltmeter used in the experiment had a zero error. The potential difference recorded in the experiment was smaller than it should have been.

Discuss how the actual value of the resistivity of the metal would differ from the value calculated in **(b)**.

---**[3]**

STEMUP.CO.UK

4 **Fig. 17.1** shows a resistor and a diode connected in series to a cell.

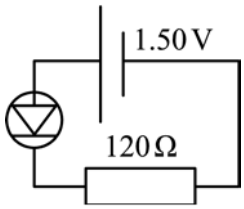

Fig. 17.1

The resistor has resistance 120 Ω. The cell has e.m.f. 1.50 V and negligible internal resistance. The potential difference across the diode is 0.62 V.

Calculate the total power dissipated in the circuit.

power = _____ W **[3]**

5 A student is given two identical filament lamps. Each lamp is labelled as '12 V, 24 W'. The student connects the two lamps in series across a 12 V supply of negligible internal resistance.

Which of the following statements is / are true when the lamps are in **series**?

1 The resistance of each lamp is 6.0 Ω
2 The current in the circuit is greater than 1.0 A.
3 The potential difference across each lamp is 6.0 V.

A 1, 2 and 3
B Only 2 and 3
C Only 1 and 2
D Only 2

Your answer ☐

[1]

© OCR 2022. You may photocopy this page.

Created in ExamBuilder

STEMUP.CO.UK

6 A wire **X** has length L and radius r. Another wire **Y** made of the same material as **X** has length $2L$ and radius $3r$. The wires are connected in **parallel** to a battery.

What is the correct ratio of

$$\frac{\text{power dissipated in } \mathbf{Y}}{\text{power dissipated in } \mathbf{X}} \ ?$$

A 0.22
B 1.0
C 4.5
D 6.2

Your answer

[1]

STEMUP.CO.UK

7(a) A battery is connected in series with a lamp and a resistor as shown.

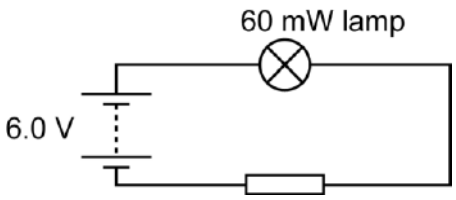

The battery has e.m.f. 6.0 V and negligible internal resistance. The potential difference across the lamp is 2.4 V and it dissipates 60 mW. The resistor has cross-sectional area of 2.0 mm^2. The number density of charge carriers (free electrons) within the resistor is 1.4×10^{25} m^{-3}.

Calculate the resistance *R* of the resistor.

R = _____ Ω **[3]**

(b) Calculate the mean drift velocity *v* of the free electrons within the resistor.

v = _____ m s^{-1} **[3]**

(c) The number density of the free electrons in the connecting wires is greater than that of the resistor. The connecting wires have the same diameter as the resistor. State and explain whether the mean drift velocity of the free electrons would be smaller, the same, or larger than your value in **(b)**.

_____

_____

_____ **[2]**

STEMUP.CO.UK

(d) A student connects the circuit shown to plot the *I*-*V* characteristic of the filament lamp.

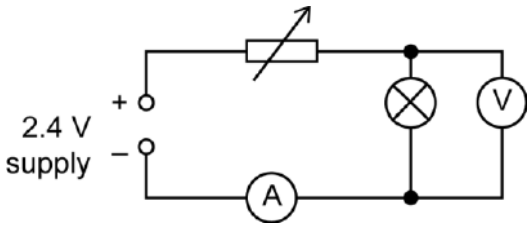

The current in the lamp is *I* and the potential difference across it is *V*. The supply has e.m.f. 2.4 V and negligible internal resistance. The maximum resistance of the variable resistor is about 60 Ω.

(i) Explain why this circuit will provide data for large *V* values but not for small *V* values.

---

[2]

(ii) Complete Fig. 16 to design a circuit so that data may be obtained for *V* from zero to 2.4 V for the lamp.

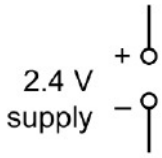

Fig. 16

[2]

STEMUP.CO.UK

8 Electrons in a beam are accelerated from rest by a potential difference V between two vertical plates before entering a uniform electric field of electric field strength E between two horizontal parallel plates, a distance $2d$ apart.

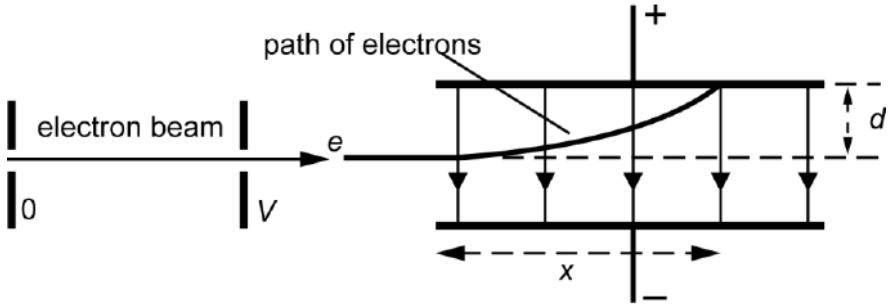

Fig. 2.1

The path of the electrons is shown in Fig. 2.1. The electron beam travels a horizontal distance x parallel to the plates before hitting the top plate. The beam has been deflected through a vertical distance d.

Show that x is related to V by the equation

$$x^2 = \frac{4dV}{E}$$

[5]

9 A small heater is connected to a power supply. The power supply is switched on for 100 s. The current in the heater is 3.0 A and it dissipates 1200 J of thermal energy.

What is the potential difference across the heater?

A 0.25V
B 4.0V
C 12V
D 300V

Your answer ☐

[1]

STEMUP.CO.UK

10 A variable resistor is connected across the terminals of a power supply of constant e.m.f. and internal resistance *r*.

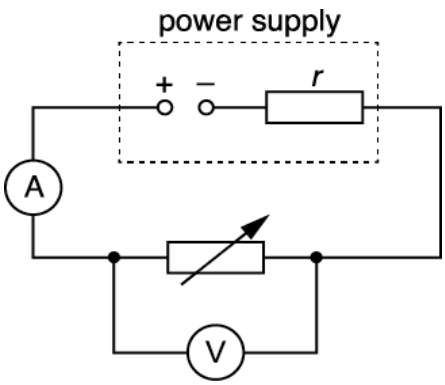

The resistance of the variable resistor is changed from zero to its maximum value.

Which of the following statements is/are correct?

1 The current in the circuit decreases.
2 The p.d. across the internal resistance decreases.
3 A graph plotted of terminal p.d. against current has a negative gradient.

A Only 1
B Only 1 and 2
C Only 1 and 3
D 1, 2 and 3

Your answer ☐

[1]

STEMUP.CO.UK

11(a) Two resistors of resistances R_1 and R_2 are connected in **parallel**.

Show that the total resistance R of this combination is given by the equation

$$\frac{1}{R} = \frac{1}{R_1} + \frac{1}{R_2} .$$

[3]

STEMUP.CO.UK

(b) A filament lamp **X** is part of an electrical circuit. The circuit has a battery of electromotive force (e.m.f.) 6.0 V and negligible internal resistance. The potential difference across the lamp can be increased **continuously** from 0 to 6.0 V. This potential difference is measured using a voltmeter.
The lamp glows brightly at 6.0 V.

(i) Draw a circuit diagram for this electrical arrangement.

[2]

(ii) Describe and explain the variation of the resistance of this lamp as the potential difference across it is changed from 0 to 6.0 V.

---

[4]

(iii) The filament lamp **X** is now connected in a different circuit as shown in Fig. 16.

STEMUP.CO.UK

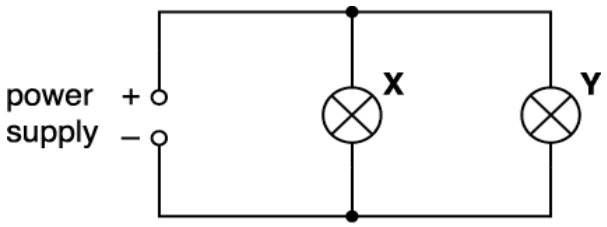

Fig. 16

The power dissipated in X is three times more than the power dissipated in the filamentlamp Y. The filament wire of lamp X has a diameter half that of lamp Y.

The filament wires of X and Y are made of the same material and are at the same temperature.

Calculate the ratio

$$\frac{\text{mean drift velocity of charge carriers in lamp } \mathbf{X}}{\text{mean drift velocity of charge carriers in lamp } \mathbf{Y}}.$$

ratio = _____ [3]

STEMUP.CO.UK

12 One million electrons travel between two points in a circuit.
The **total** energy gained by the electrons is 1.6×10^{-10} J.

What is the potential difference between the two points?

A 1.6×10^{-16} V

B 1.6×10^{-4} V

C 1.0×10^{3} V

D 1.0×10^{9} V

Your answer ☐ **[1]**

13 Which is **not** a unit of energy?

A kW h

B eV

C J

D W

Your answer ☐ **[1]**

STEMUP.CO.UK

14 A circuit is shown below.

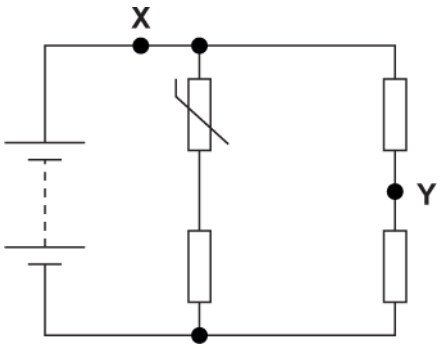

The battery has negligible internal resistance. The temperature of the NTC thermistor is **decreased**.

Which of the following statements is / are correct?

1 The current at **X** increases.

2 The current at **Y** remains the same.

3 The potential difference across the thermistor increases.

A 1, 2 and 3

B Only 2 and 3

C Only 3

D Only 2

Your answer ☐ **[1]**

STEMUP.CO.UK

15(a)

State **one** S.I. base quantity other than length, mass and time.

[1]

(b) Fig. 17 shows two resistors **X** and **Y** connected in series.

Fig. 17

The resistors are wires. Both wires have the same length L and diameter d. The material of **X** has resistivity ρ and the material of **Y** has resistivity 2ρ.

(i) Show that the total resistance R of the wires is given by the equation

$$R = \frac{12\rho L}{\pi d^2}.$$

[2]

(ii) A student uses the equation in **(i)** to determine R.

The table below shows the data recorded by the student in her lab book.

Quantity	Value
ρ	4.7×10^{-7} Ωm
L	9.5 ± 0.1 cm
d	0.270 ± 0.003 mm

STEMUP.CO.UK

1 Name the likely instruments used by the student to measure *L* and *d*.

L: _____

d: _____ [1]

2 Use the data in the table and the equation in **(i)** to determine *R* and the absolute uncertainty. Write your answer to the correct number of significant figures.

R = _____ ± _____ Ω **[4]**

3 The instrument used to measure *d* has a zero-error. The measured *d* is much **larger** than the actual value.

Discuss how the actual value of *R* compares with the value calculated above.

_____

_____

_____ [1]

STEMUP.CO.UK

16(a)

A student conducts an experiment to confirm that the uniform magnetic flux density *B* between the poles of a magnet is 30 mT.

A current-carrying wire of length 5.0 cm is placed perpendicular to the magnetic field.

The current *I* in the wire is changed and the force *F* experienced by the wire is measured. Fig. 22.1 shows the graph plotted by the student.

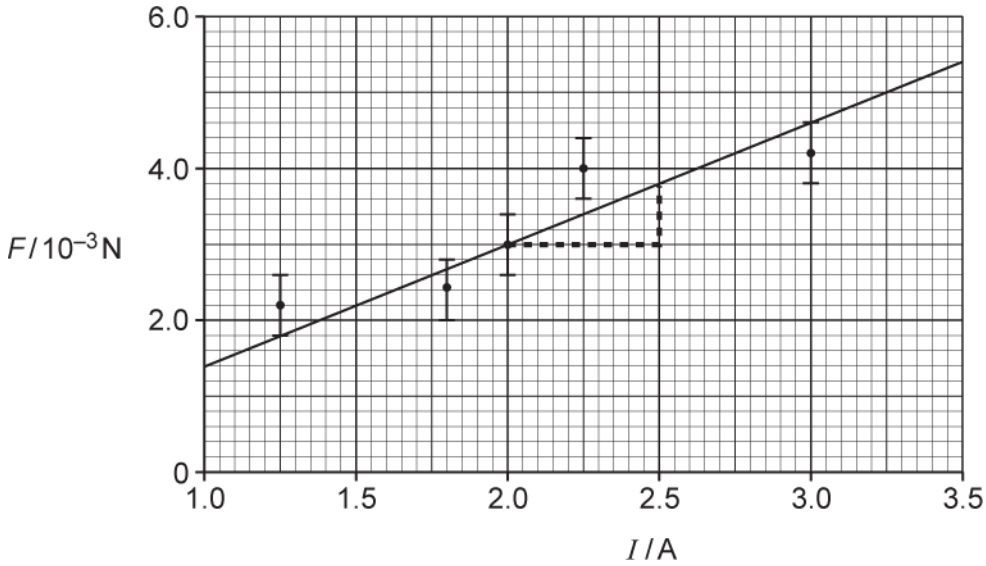

Fig. 22.1

The student's analysis is shown on the graph of Fig. 22.1 and in the space below.

$F = BIL$

$$\text{gradient} = BL = \frac{(3.8 - 3.0) \times 10^{-3}}{2.5 - 2.0} = 0.0016$$

$$B = \frac{0.0016}{0.05} = 0.032\,\text{T} = 32\,\text{mT}$$

This is just 2 mT out from the 30 mT value given by the manufacturer, so the experiment is very accurate.

Evaluate the information from Fig. 22.1 and the analysis of the data from the experiment. No further calculations are necessary.

STEMUP.CO.UK

STEMUP.CO.UK

[6]

(b) Fig. 22.2 shows a transformer circuit.

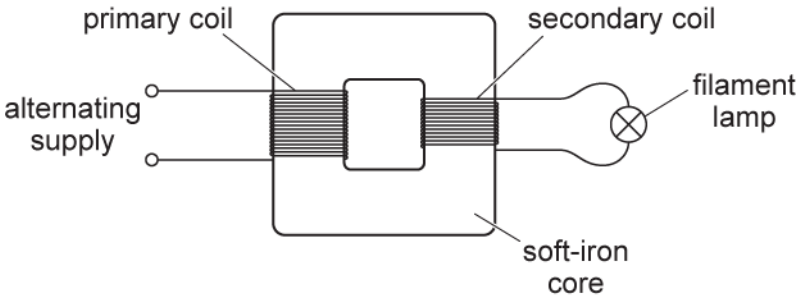

Fig. 22.2

The primary coil is connected to an alternating voltage supply. A filament lamp is connected to the output of the secondary coil.

(i) Use Faraday's law of electromagnetic induction to explain why the filament lamp is lit.

STEMUP.CO.UK

---[3]

(ii) The primary coil has 400 turns and the secondary coil has 20 turns. The potential difference across the lamp is 12 V and it dissipates 24 W. The transformer is 100% efficient.

1 Calculate the current in the primary coil.

current = _____ A [2]

2 The alternating voltage supply is replaced by a battery and an open switch in series. The switch is closed. The lamp is lit for a short period of time and then remains off. Explain this observation.

---[2]

STEMUP.CO.UK

17(a)

You are given an unmarked sealed square box which has four identical terminals at each corner.

Fig 4.1 shows the circuit diagram for the contents of the box with the four terminals labeled **A**, **B**, **C** and **D**.

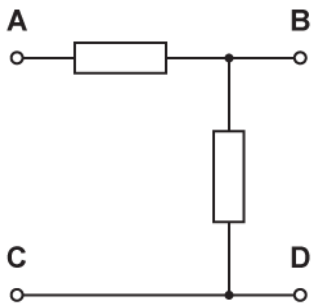

Fig. 4.1

One of the resistors in the box has resistance 220 Ω. The other resistor has resistance 470 Ω. Two of the terminals are connected by a wire.

The four terminals on your unmarked sealed box are **not** labelled.

You are given a 6.0 V d.c. supply, a 100 Ω resistor (labelled R) and a digital ammeter.

Plan an experiment to determine the arrangement of the components and identify which terminal of your unmarked sealed box is **A**, **B**, **C** and **D**.

A space has been left for you to draw circuit diagrams to illustrate your answer.

© OCR 2022. You may photocopy this page.

Created in ExamBuilder

STEMUP.CO.UK

STEMUP.CO.UK

[6]

STEMUP.CO.UK

(b) A light-dependent resistor (LDR) is connected between points **X** and **Y** in the circuit of Fig. 4.2. The circuit is used to switch on a lamp during the hours of darkness.

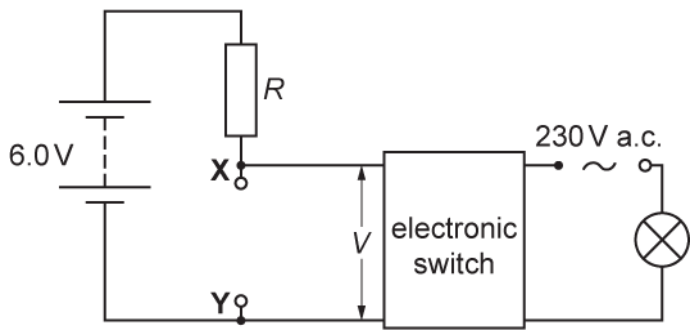

Fig. 4.2

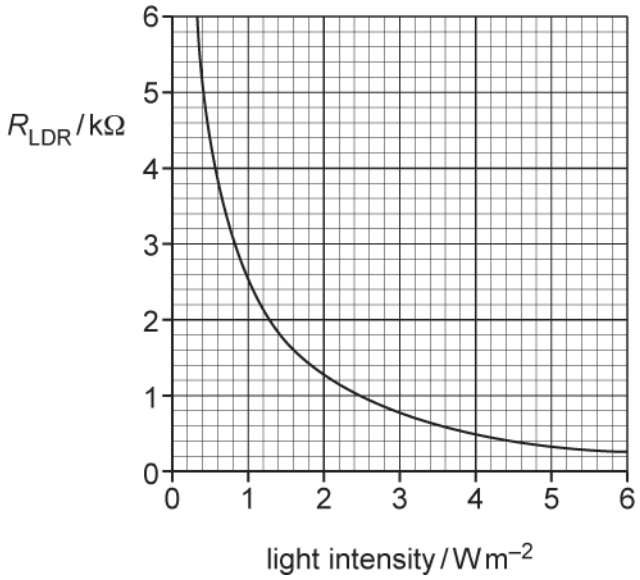

Fig. 4.3

(i) Draw the symbol for an LDR on Fig. 4.2 between **X** and **Y**. **[1]**

(ii) Fig. 4.3 shows how the resistance of the LDR varies with light intensity. The electronic switch closes when *V* across **XY** is 4.0 V and opens when *V* across **XY** is 2.4 V. The electronic switch draws a negligible current.

STEMUP.CO.UK

Calculate

1 the resistance R of the resistor for the lamp to switch on at a light intensity of 0.80 W m^{-2}

R = _____ Ω **[3]**

2 the light intensity of the surroundings at which the lamp switches off.

light intensity = _____ W m^{-2} **[2]**

STEMUP.CO.UK

18(a) This question is about a resistance wire made of nichrome.

It is suggested that the resistance R of a length of nichrome wire varies with temperature θ in °C according to the equation

$$R = R_0 (1 + k\theta)$$

where R_0 is the resistance of the wire at 0 °C and k is a constant for the wire.

Fig. 1.1 shows a diagram of the arrangement of apparatus in an experiment to test the relationship between R and θ and to determine the value of k.

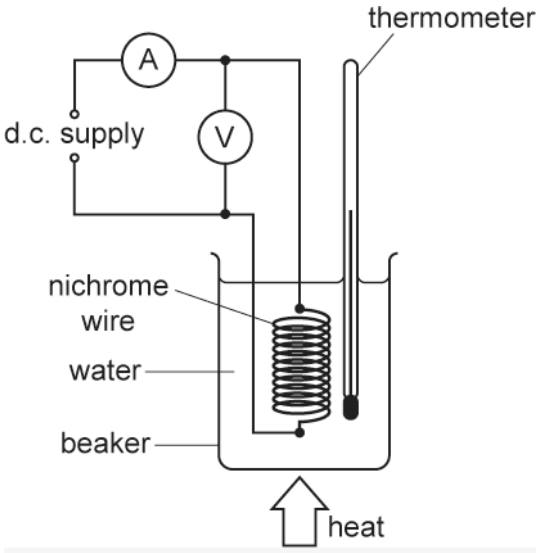

Fig. 1.1

The resistance wire is coiled and placed in a water bath.

Describe how you would carry out the experiment, analyse the data to verify the relationship between R and θ and determine a value for k.

In your description, state any precautions that you would take to improve the accuracy and precision of the measurements.

STEMUP.CO.UK

[6]

STEMUP.CO.UK

(b) A student is investigating a 230 V, 1.0 kW heating element. The heating element is shown in Fig. 1.2.

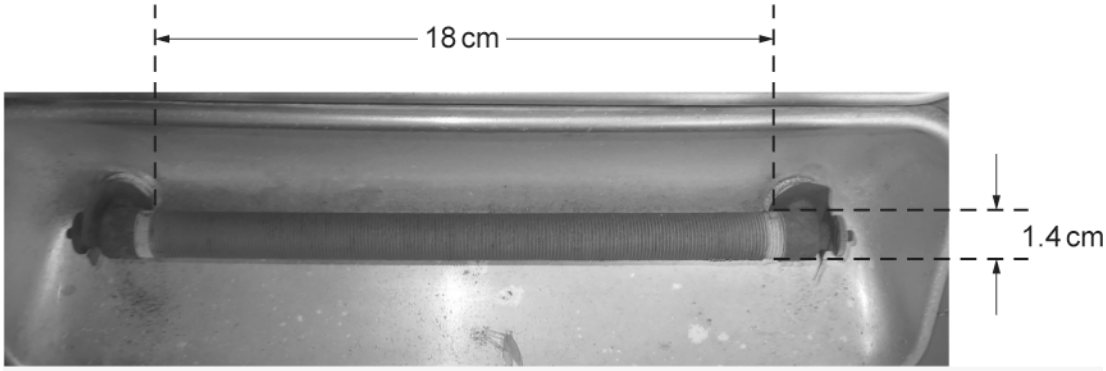

Fig. 1.2

A length of nichrome wire is wound in a spiral groove along 18 cm of a ceramic cylinder of diameter 1.4 cm. The distance between the centres of adjacent turns of the wire is 1.5 mm.

The numbers labelling the reels of loose wire on the laboratory shelf are the *imperial standard wire gauge* (swg). The student wishes to find out which reel holds the same wire as that wound on the heating element of Fig. 1.2.

The book of data gives the following information:

resistivity of nichrome at operating temperature = 1.1×10^{-6} Ω m

swg	24	26	28	30	32
diameter of wire / 10^{-3} m	0.56	0.46	0.38	0.32	0.27
cross-sectional area / 10^{-6} m^2	0.25	0.16	0.11	0.08	0.06

(i) Show that the resistance of the nichrome wire wound on the ceramic cylinder is 53 Ω.

[2]

STEMUP.CO.UK

(ii) Show that the length of wire wound on the heating element is 5.3 m.

[2]

(iii) Use the information given in **(i)** and **(ii)** to determine the swg number of the wire used as the heating element.

swg number = ---------- [3]

STEMUP.CO.UK

19 Three identical resistors **X**, **Y** and **Z** are connected to a power supply.

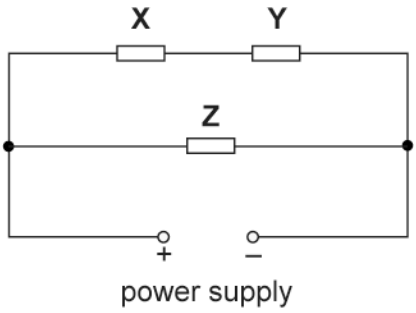

The power dissipated in the resistor **Z** is 24 W.

What is the power dissipated in the resistor **Y**?

A 6.0 W
B 12 W
C 24 W
D 48 W

Your answer [1]

STEMUP.CO.UK

20(a)

Derive the S.I. base units for resistance.

base units: ---------- [2]

(b) Fig. 16.1 shows the *I-V* characteristics of two electrical components **L** and **R**.

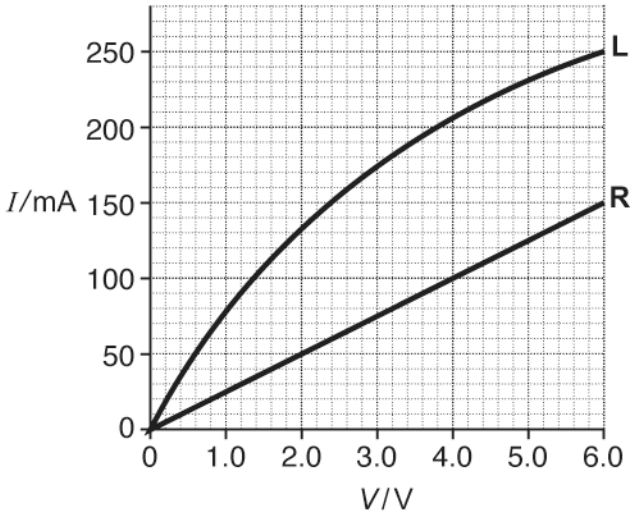

Fig. 16.1

The component **L** is a filament lamp and the component **R** is a resistor.

(i) Show that the resistance of **R** is 40 Ω.

STEMUP.CO.UK

(ii) Fig. 16.2 shows the components **L** and **R** connected in series to a battery of e.m.f. 6.0 V.

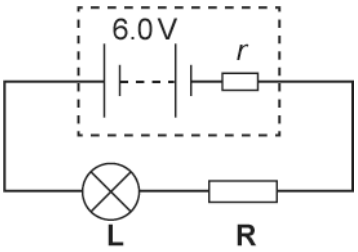

Fig. 16.2

The resistor **R** is a cylindrical rod of length 8.0 mm and cross-sectional area 2.4×10^{-6} m^2. The current in the circuit is 100 mA.

1 Use Fig. 16.1 to determine the internal resistance *r* of the battery.

r = ----------Ω **[3]**

STEMUP.CO.UK

2 Calculate the resistivity ρ of the material of the resistor **R**.

ρ = ---------- Ω m **[2]**

3 There are 6.5×10^{17} charge carriers within the volume of **R**.

Calculate the mean drift velocity v of the charge carriers within the resistor **R**.

v = ---------- m s^{-1} **[3]**

21

STEMUP.CO.UK

A metal circular plate is rotated at a constant frequency by an electric motor.
The plate has a small hole close to its rim.
Fig. 17.1 shows an arrangement used by a student to determine the frequency of the rotating plate.

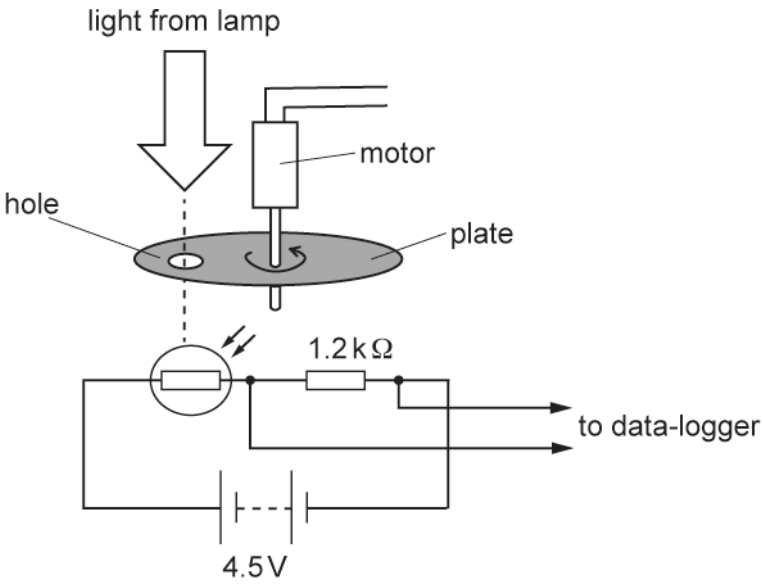

Fig. 17.1

A light-dependent resistor (LDR) and a fixed resistor of resistance 1.2 kΩ are connected in series to a battery. The battery has e.m.f. 4.5 V and has negligible internal resistance. The potential difference *V* across the resistor is monitored using a data-logger.

Fig. 17.2 shows the variation of *V* with time *t*.

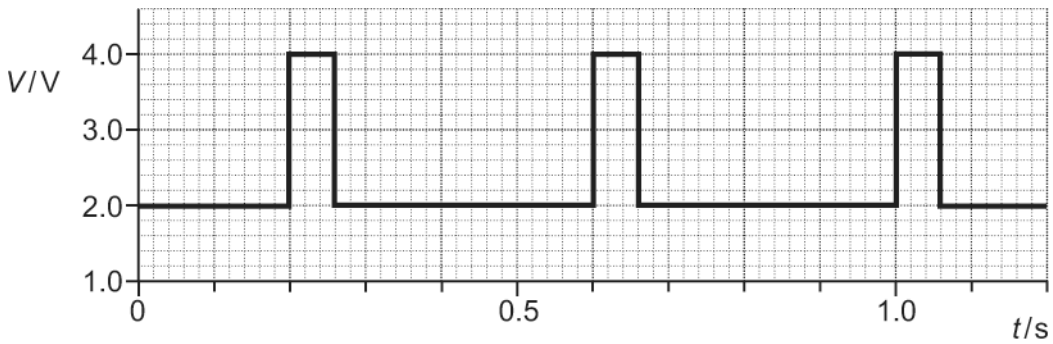

Fig. 17.2

Use your knowledge and understanding of potential divider circuits to explain the shape of the graph shown in Fig. 17.2. Include in your answer the maximum and minimum values of the resistance of the LDR.
Describe how the student can determine the frequency of the rotating plate.

STEMUP.CO.UK

[6]

STEMUP.CO.UK

22 Wires **P** and **Q**, made from the same metal, are connected in **parallel** across a cell of negligible internal resistance.

The table shows some data.

Wire	Length of wire	Diameter of wire	Mean drift velocity of electrons in the wire / mm s^{-1}
P	L	d	0.60
Q	$3L$	$2d$	v

What is the mean drift velocity v of the electrons in wire **Q**?

A 0.15 mm s^{-1}

B 0.20 mm s^{-1}

C 0.30 mm s^{-1}

C 0.60 mm s^{-1}

Your answer [1]

STEMUP.CO.UK

23(a) The S.I. base units for the ohm (Ω) are kg m^2 s^{-3} A^{-2}.

Use the equation $R = \frac{\rho L}{A}$ to determine the S.I. base units for resistivity ρ.

base units for ρ ..... **[2]**

(b) Fig. 18.1 shows a circuit used by a student to determine the resistivity of the material of a wire.

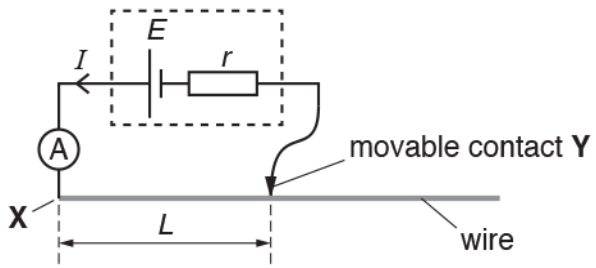

Fig. 18.1

The wire is uniform and has diameter 0.38 mm. The cell has electromotive force (e.m.f.) E and internal resistance r. The length of the wire between **X** and **Y** is L.

The student varies the length L and measures the current I in the circuit for each length.

Fig. 18.2 shows the data points plotted by the student.

STEMUP.CO.UK

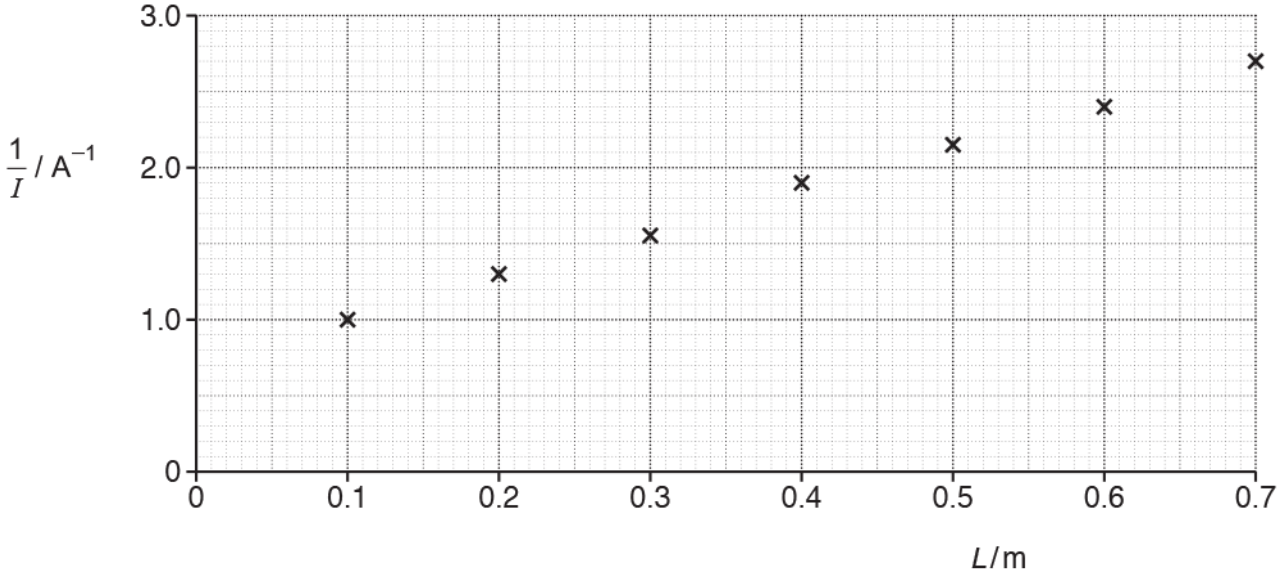

Fig. 18.2

(i) On Fig. 18.2 draw the straight line of best fit. Determine the gradient of this line.

gradient = ... A^{-1} m^{-1} **[2]**

(ii) Show that the gradient of the line is $\frac{\rho}{AE}$, where ρ is the resistivity of the material of the wire, A is the area of cross-section of the wire and E is the e.m.f. of the cell.

[2]

(iii) The e.m.f. E of the cell is 1.5 V. The diameter of the wire is 0.38 mm.

STEMUP.CO.UK

Use your answer to **(i)** and the equation given in **(ii)** to determine ρ.

ρ = ... Ωm **[2]**

(iv) Fig. 18.3 illustrates how the student had incorrectly measured all the lengths *L* of the wire.

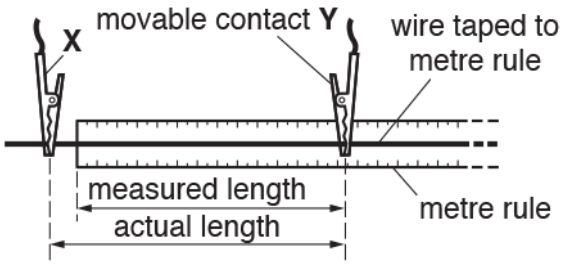

Fig. 18.3

According to the student, re-plotting the data points using the **actual** lengths of the wire will not affect the value of the resistivity obtained in **(iii)**.

Explain why the student is correct.

.....

.....

.....

..... **[2]**

STEMUP.CO.UK

24(a) Fig. 19.1 shows an electric circuit.

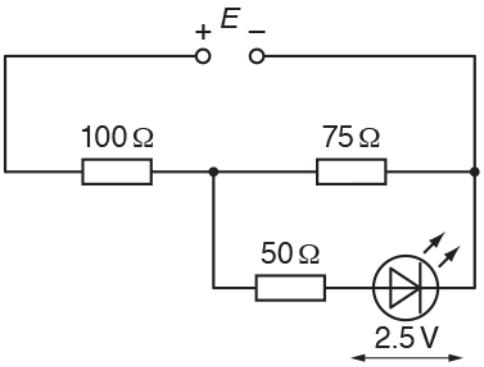

Fig. 19.1

The power supply has electromotive force (e.m.f.) *E* and negligible internal resistance.

The resistance values of the resistors are shown in Fig. 19.1. The *I*–V characteristic of the lightemitting diode (LED) is shown in Fig. 19.2.

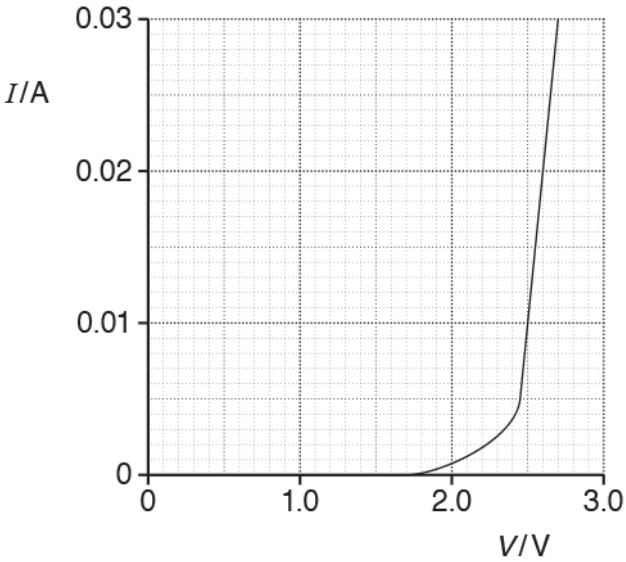

Fig. 19.2

The potential difference (p.d.) across the LED is 2.5 V.

Use Fig. 19.2 to show that the p.d. across the 50 Ω resistor is 0.50 V.

[2]

STEMUP.CO.UK

(b) Calculate the e.m.f. *E* of the power supply.

E = ...V **[3]**

STEMUP.CO.UK

25(a) A 150 W heater constructed from nichrome wire is switched on for 5.0 hours.

The wire has a cross-sectional area of 4.1×10^{-9} m^2.
The current in the wire is 1.5 A.
The number density of charge carriers in nichrome is 7.9×10^{28} m^{-3}.

Calculate

(i) the resistance R of the heater

R = ... Ω **[2]**

(ii) the number N of electrons passing through the heater in 5.0 hours

N = ... **[2]**

(iii) the mean drift velocity v of the electrons (charge carriers) in the heater.

v = ... ms^{-1} **[2]**

(b) The cost of 1 kWh of energy is 16p.
Calculate the cost of using the heater for 5.0 hours.

cost = ... p **[2]**

STEMUP.CO.UK

(c) Nichrome is a metal. Silicon is a semiconductor.

State how the number density of charge carriers n and the resistivity ρ of silicon compare with that of nichrome.

n _____

ρ _____

[2]

26 The potential difference across a lamp is 2.5 V. The current in the lamp is 20 mA.

What is the energy dissipated in the lamp in 3.0 hours?

A 0.050 J
B 0.15 J
C 9.0 J
D 540 J

Your answer [ ] [1]

STEMUP.CO.UK

27(a) The International Space Station (ISS) orbits the Earth at a height of 4.1×10^5 m **above** the Earth's surface.

The radius of the Earth is 6.37×10^6 m. The gravitational field strength g_0 at the Earth's surface is 9.81 N kg^{-1}.

Both the ISS and the astronauts inside it are in free fall.

Explain why this makes the astronauts feel **weightless**.

---

[1]

(b)

(i) Calculate the value of the gravitational field strength g at the height of the ISS above the Earth.

g = ... N kg^{-1} **[3]**

(ii) The speed of the ISS in its orbit is 7.7 km s^{-1}. Show that the period of the ISS in its orbit is about 90 minutes.

[2]

STEMUP.CO.UK

(c) Use the information in **(b)(ii)** and the data below to show that the root mean square (r.m.s.) speed of the air molecules inside the ISS is approximately 15 times smaller than the orbital speed of the ISS.

- molar mass of air = 2.9×10^{-2} kg mol^{-1}
- temperature of air inside the ISS = 20 °C

[3]

STEMUP.CO.UK

(d) The ISS has arrays of solar cells on its wings. These solar cells charge batteries which power the ISS. The wings always face the Sun.

Use the data below and your answer to **(b)(ii)** to calculate the **average** power delivered to the batteries.

- The total area of the cells facing the solar radiation is 2500 m^2.
- 7% of the energy of the sunlight incident on the cells is stored in the batteries.
- The intensity of solar radiation at the orbit of the ISS is 1.4 kW m^{-2} outside of the Earth's shadow and zero inside it.
- The ISS passes through the Earth's shadow for 35 minutes during each orbit.

average power = ... W **[4]**

STEMUP.CO.UK

28(a) A light-emitting diode (LED) emits red light when it is positively biased and has a potential difference (p.d.) greater than about 1.8 V.

An LED is connected into a circuit, as shown below.

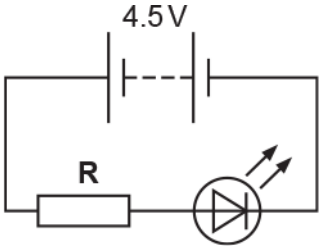

The battery has electromotive force (e.m.f.) 4.5 V and negligible internal resistance.
The resistor **R** has resistance 150 Ω.
Assume the p.d. across the LED is 1.8 V.

Calculate the ratio $\frac{\text{power dissipated by LED}}{\text{power dissipated by resistor}}$.

ratio = ... **[2]**

STEMUP.CO.UK

(b) The diagram below shows a circuit designed by a student.

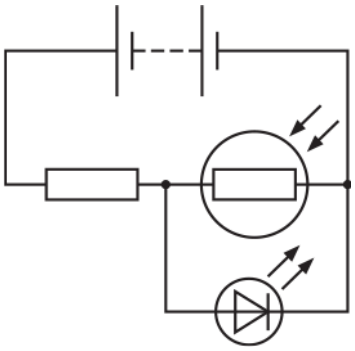

The LED is very close to, and facing the light dependent resistor (LDR).
The circuit is taken into a dark room.

(i) The student thought that the LED would switch on.
Instead, the LED was found to repeatedly switch on and off.

Explain this behaviour of the LED in this potential divider circuit.

---

[2]

(ii) Suggest a possible refinement so that the LED switches on permanently when taken into the dark room.

---

[1]

STEMUP.CO.UK

29 * A resistance wire is coiled around a thermistor. The coil of wire will warm the thermistor.

It is suggested that the relationship between the power P dissipated in the coiled wire and the stable resistance R of the thermistor is given by the expression $P = kR^n$, where k and n are constants.

Describe how an experiment can be conducted to assess the validity of this expression and how the data collected can be analysed to determine k and n.

Use the space below for a circuit diagram.

© OCR 2022. You may photocopy this page.

Created in ExamBuilder

STEMUP.CO.UK

[6]

STEMUP.CO.UK

30 A spherical metal dome shown below is charged to a potential of –12 kV.

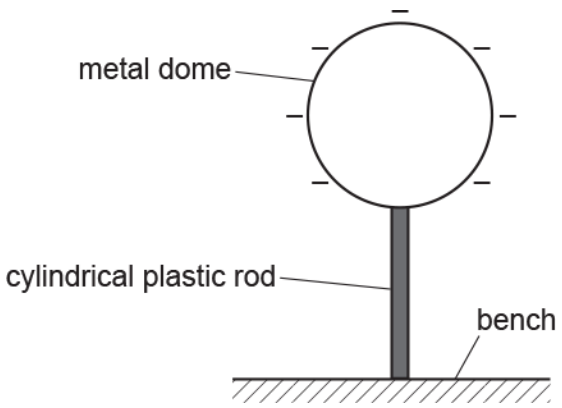

The dome is supported by a cylindrical plastic rod. The radius of the dome is 0.19 m.

(i) Show that the magnitude of the total charge Q on the dome is 2.5×10^{-7} C.

[2]

(ii) The dome discharges slowly through the plastic rod.
It takes 78 hours for the dome to completely discharge.

1 Show that the mean current I in the plastic rod is about 9×10^{-13} A.

[2]

2 The average potential difference across the plastic rod during discharge is 6000 V.
The rod has cross-sectional area 1.1×10^{-4} m^2 and length 0.38 m.

Calculate the resistivity ρ of the plastic.

ρ = ... Ωm [3]

STEMUP.CO.UK

31 This question is about investigations involving an electromagnetic wave.

A vertical transmitter aerial emits a **vertically polarised** electromagnetic wave which travels towards a vertical receiver aerial. The wavelength of the wave is 0.60 m.

Fig. 5.1 shows a short section of the oscillating electric field of the electromagnetic wave.

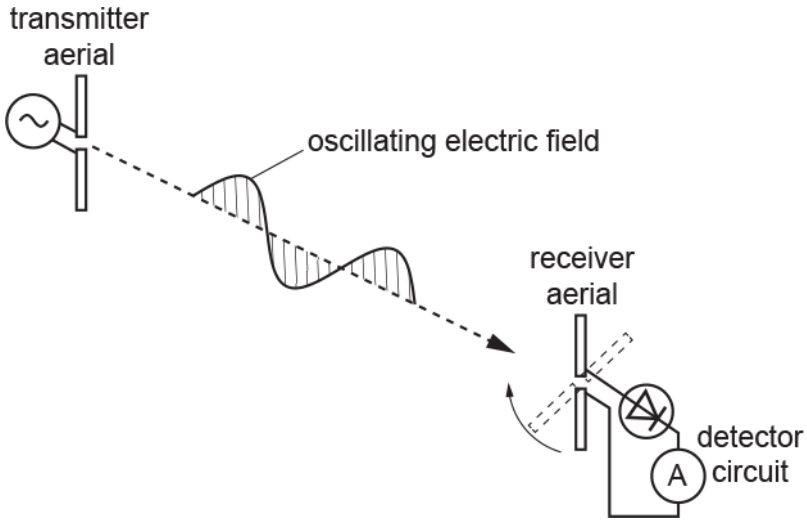

Fig. 5.1

Suggest why the diode in **Fig. 5.1** is necessary for an ammeter to detect a signal at the receiver aerial.

---

[1]

STEMUP.CO.UK

32 A researcher is investigating the de Broglie wavelength of charged particles.

The charged particles are accelerated through a potential difference V. The de Broglie wavelength λ of these particles is then determined by the researcher.

Each particle has mass m and charge q.

(i) Show that the de Broglie wavelength λ is given by the expression $\lambda^2 = \frac{h^2}{2mq} \times \frac{1}{V}$.

[2]

(ii) The researcher plots data points on a λ^2 against $\frac{1}{V}$ grid, as shown below.

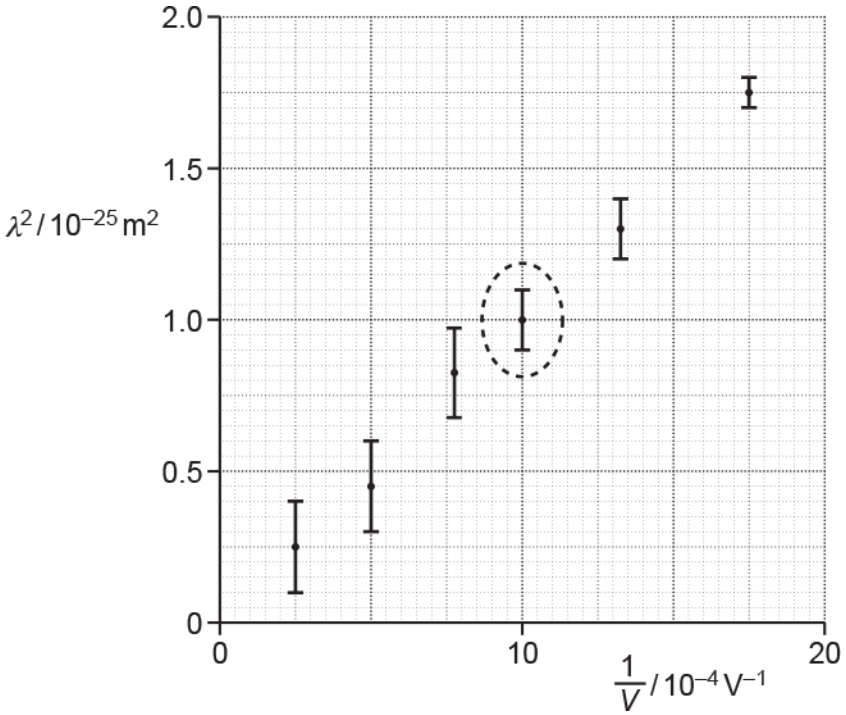

STEMUP.CO.UK

1 Calculate the percentage uncertainty in λ for the data point circled on the grid.

percentage uncertainty = ... % **[2]**

2 Draw a straight line of best fit through the data points. **[1]**

3 The charge q on the particle is $2e$, where e is the elementary charge.

Use your best fit straight line to show that the mass m of the particle is about 10^{-26} kg.

[4]

END OF QUESTION PAPER

STEMUP.CO.UK

Question			Answer/Indicative content	Marks	Guidance
1			C	1	
			Total	1	
2			D	1	
			Total	1	
3	a		5.56 (V) and data point plotted correctly to ± ½ small square.	B1	
	b		Best fit straight line drawn through the last 4 data points. Gradient of the line determined. *p*= gradient **x** *A*, hence resistivity = (1.1± 0.1) **x** 10^{-6} (Ω m)	B1 B1 B1	**Allow** a maximum of 2 marks if the line of best fit is drawn through all 5 data points.
	c		The actual resistance values will be smaller. The gradient of the graph will be lower. Hence resistivity of the metal will be smaller than the value in **(b)**.	B1 B1 B1	
			Total	7	
4			p.d. across resistor = 1.50 – 0.62 = 0.88 (V) current = 0.88 / 120 = 7.33… × 10^{-3} (A) power = *VI* = 1.50 × 7.33 × 10^{-3} = 1.1 × 10^{-2} (W)	C1 C1 A1	
			Total	3	
5			B	1	
			Total	1	
6			C	1	
			Total	1	
7	a		current = $\frac{0.060}{2.4}$ or current = 0.025 (A) $R = \frac{6.0 - 2.4}{0.025}$	C1 C1	

© OCR 2022. You may photocopy this page.

Created in ExamBuilder

STEMUP.CO.UK

Question			Answer/Indicative content	Marks	Guidance
			R = 140 (Ω)	A1	**Note** answer to 3 sf is 144 Ω
	b		$I = Anev$ and $A = 2.0 \times 10^{-6}$ (m^2) $0.025 = 2.0 \times 10^{-6} \times 1.4 \times 10^{25} \times 1.60 \times 10^{-19} \times v$ $v = 5.6 \times 10^{-3}$ ($m\ s^{-1}$)	C1 C1 A1	 **Allow** any subject Possible ecf
	c		The current is constant, therefore $v \propto n^{-1}$. The mean drift velocity is therefore smaller.	M1 A1	
	d	i i	With the variable resistor set at zero / close to zero, the p.d. across the resistor is zero / small, so p.d. across lamp is 2.4 V / large. With the variable resistor set at its maximum value, there is a p.d. across the variable resistor, so p.d. across the lamp is not small.	B1 B1	
		ii ii	The lamp is connected to the slider contact of a potentiometer arrangement. Ammeter and voltmeter connected correctly.	B1 B1	
			Total	12	
8			$eV = ½mv^2$ so $v^2 = 2eV/m$ $ma = eE$ so $a = eE/m$ $x = vt$ $d = ½at^2 = ½a(x/v)^2$ $d = (eE/2m).x^2.(m/2eV) = Ex^2/4V$ $x^2 = 4(d/E)V$	B1 B1 B1 B1 B1 A0	four equations are needed and some sensible substitution, etc. shown for the fifth mark
			Total	5	
9			B	1	
			Total	1	

STEMUP.CO.UK

Question			Answer/Indicative content	Marks	Guidance
10			D	1	
			Total	1	
11	a		$I = I_1 + I_2$ V is the same (for each resistor) $\frac{V}{R} = \frac{V}{R_1} + \frac{V}{R_2}$ leading to correct expression	M1 M1 A1	
	b	i	Correct circuit with a battery, potential divider, lamp and voltmeter. 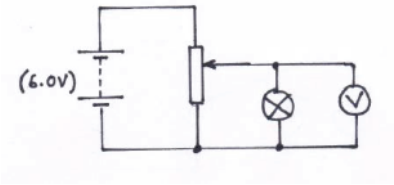 	B1	
		i	Correct symbols used for all components.	B1	**Allow**: A cell symbol for a battery
		ii	Description: The temperature of the filament increases. (AW)	B1	
		ii	The resistance of the lamp increases	M1	
		ii	from a non-zero value of resistance.	A1	**Allow** 'when cold the resistance is small'
		ii	Explanation: Resistance increases because electrons/charge carriers make frequent collisions with ions. (AW)	B1	
		iii	($P = VI$) current in **X** is 3 times the current in **Y** Or area of **X** is 4 times smaller than area of **Y**	C1	**Allow** other correct methods.
		iii	$I = Anev$ and ratio = $\frac{3}{0.25}$	C1	
		iii	ratio = 12	A1	
			Total	12	
12			C	1	
			Total	1	

STEMUP.CO.UK

Question			Answer/Indicative content	Marks	Guidance
13			D	1	
			Total	1	
14			B	1	
			Total	1	

© OCR 2022. You may photocopy this page.

Created in ExamBuilder

STEMUP.CO.UK

Question			Answer/Indicative content	Marks	Guidance
15	a		Any <u>one</u> from: current, temperature, light intensity and amount of substance / matter	B1	**Not:** ampere, kelvin, candela and mole **Not** correct quantity with its unit, e.g. current in A or current (A) Examiner's Comment Most candidates could not state an unambiguous base quantity. There was no credit for a correctly named quantity accompanied by its S.I. unit, e.g. *'current in ampere'.* Some answers were just wrong; these include *force, charge, energy* and *kelvin.*
	b	i	$R = \frac{\rho L}{A}$ **and** $A = \pi\left(\frac{d}{2}\right)^2$ $R_X = \frac{4\rho L}{\pi d^2}$ and $R_Y = \frac{8\rho L}{\pi d^2}$ Clear steps leading to $R = \frac{12\rho L}{\pi d^2}$	M1 A1	Examiner's Comment Most candidates were familiar with the equations $R = \rho L / A$ and $A = \pi d^2/4$. The modal score here was two marks. Most scripts had well-structured answers and demonstrated excellent algebraic skills. A variety of techniques were employed to determine the total resistance of the two resistors in series.
		ii	1 Ruler / tape measure (for *L*) **and** micrometer (for *d*) 2 R = 2.3(4) (Ω) $\frac{0.1}{9.5}$ or $2 \times \frac{0.003}{0.270}$ $\frac{0.1}{9.5} + 2 \times \frac{0.003}{0.270}$ or 0.0327 or 3.27% absolute uncertainty in R = 0.0327 × 2.34 = 0.077 R = 2.3 ± 0.1 (Ω) 3 (The actual) R is large(r) **because** (the actual) d is small(er) or (the actual) A is small(er) or $R \propto 1/d^2$	B1 C1 C1 C1 A1 B1	**Allow** (vernier / digital) calipers or travelling microscope for micrometer **Allow** other correct methods for getting 2.3 ± 0.1 (Ω) **Allow** 2 or more sf for this C1 mark **Note** 0.0105 or 1.05% or 0.0222 or 2.22% scores this mark, allow 2sf or more **Allow:** 2.34 ± 0.08 (Ω) **Note** use of R_X or R_Y instead of R can score the second and third C1 marks only **Allow:** The calculated R is small(er) **because** (the measured) A is large(r) or $R \propto 1/d^2$

© OCR 2022. You may photocopy this page.

Created in ExamBuilder

STEMUP.CO.UK

Question			Answer/Indicative content	Marks	Guidance
					Examiner's Comment Almost all candidates correctly identified the measuring instrument for *L* and *d.* Some answers were spoilt by mentioning both a ruler and a micrometer for measuring the length of the wire. This question produced a range of marks and discriminated well. According to the data shown in the table on page 13, the final value for the resistance *R* had to be given to 2 significant figures (SF), but an answer to 3 SF was also allowed. Top-end candidates produced flawless answers and quoted *R* as either 2.3 ± 0.1 Ω or 2.34 ± 0.08 Ω. Some candidates successfully calculated the maximum and the minimum values for *R* and then the absolute uncertainty from half the range. The most common mistakes being made were: • Omitting the factor of 2 when determining the percentage uncertainty in d^2. • Calculating the resistance of either resistor **X** or resistor **Y**. • Inconsistency between *R* and its absolute uncertainty, e.g. *R* = 2.3 ± 0.077 Ω. Some candidates realised that the actual value of *R* would be *'larger because d was smaller or* $R \propto 1/d^2$'. On most scripts, it was difficult to follow if the resistance was the **actual** one or the **calculated** one.
			Total	9	

STEMUP.CO.UK

Question			Answer/Indicative content	Marks	Guidance
16	a				Use level of response annotations in RM Assessor, e.g. L2 for 4 marks, L2ˆ for 3 marks, etc. Ignore incorrect references to the terms precision and accuracy
			Level 3 (5-6 marks) Clear evaluation of Fig. 22.1 and clear analysis *There is a well-developed line of reasoning which is clear and logically structured. The information presented is relevant and substantiated.* Level 2 (3-4 marks) Some evaluation of Fig. 22.1 and some analysis *There is a line of reasoning presented with some structure.* *The information presented is in the most part relevant and supported by some evidence.* Level 1 (1-2 marks) Limited evaluation of Fig. 22.1 or limited analysis *There is an attempt at a logical structure with a line of reasoning. The information is in the most part relevant.* 0 marks *No response or no response worthy of credit.*	B1×6	Indicative scientific points may include: Evaluation of Fig. 22.1 • Comment on the line • The straight line misses one error bar / anomalous point ringed or indicated • Too few data points plotted • The triangle used to calculate the gradient is (too) small • Some plots should have been repeated / checked • No error bars for current • 'Not regular intervals' (for current) • No origin shown (AW) Evaluation of analysis • The value of *B* is close to the accepted value • The difference of only 7% • No absolute or percentage uncertainty in *B* shown (AW) • Worst-fit line or maximum / minimum gradient line could have been used to determine the (absolute or percentage) uncertainty in *B* • *F* against *I* graph should be a straight line or • *BL* = gradient (any subject) Examiner's Comment This was the second level of response (LoR) question in the paper. It required evaluation of a graph drawn by a student and the analysis shown in the box on page 24. Most candidates realised that the graph had few data points, the triangle used for the gradient was too small and the line drawn totally missed one of the error bars. The analysis shown by the candidate did not include an absolute uncertainty in *B,*

STEMUP.CO.UK

Question			Answer/Indicative content	Marks	Guidance
					which made the statement written by the student lack credibility. Many candidates wrote about drawing doing a line of worst-fit and determining the percentage uncertainty. This was only possible if there were more data points and the error bars for the *F* values reduced by perhaps repeating the measurements. Once again, there was a good spread of marks amongst the three levels.
	b	i	There is a changing / fluctuating (magnetic) field / flux (linkage)	M1	**Note:** This changing flux can be anywhere **Allow** 'the direction of the field oscillates'
			(magnetic) field / flux (linkage) in <u>core</u> and <u>secondary</u> (coil)	A1	**Allow** 'the core helps to link the flux to the secondary coil'
			Statement of Faraday's law: e.m.f. (induced) ∝ <u>*rate*</u> of change of (magnetic) flux <u>linkage</u>	B1	**Allow** 'equal to / =' **Ignore** 'cutting of flux' **Not** just $E = (-)\Delta(N\varphi)/\Delta t$ **Examiner's Comment** The topic electromagnetic induction always challenges candidates. Successful responses often showed correct use of technical terms such as *magnetic flux* or *flux linkage.* Most candidates scored a mark for correctly stating Faraday's law of electromagnetic induction. Many realised that an alternating current produced an alternating magnetic flux within the iron core and this change in flux produced an e.m.f. at the secondary coil. One of the popular misconceptions was that there was an alternating current (or induced e.m.f.) within the iron-core. A small number of candidates referred to **electro**magnetic field in their descriptions rather than magnetic field.

© OCR 2022. You may photocopy this page.

Created in ExamBuilder

STEMUP.CO.UK

Question			Answer/Indicative content	Marks	Guidance
		ii	1 (I_S =) 24/12 or 2.0 (A)	C1	
			(I_P =) $\frac{20}{400} \times 2.0$		
			(current in primary =) 0.10 (A)	A1	Allow 1 sf answer
			or		
			(V_P =) 12 × 20 or 240 (V)	C1	
			(I_P =) $\frac{24}{240}$		
			(current in primary =) 0.10 (A)	A1	Allow 1 sf answer
			2 Idea of changing / increasing (magnetic) field / flux / current (in primary) at the start	B1	Note: Any labels used must be clearly defined
			Eventually current and flux (linkage) are constant, therefore no e.m.f.	B1	Examiner's Comment This question on current in the primary coil was successfully answered by most candidates. The most favourable method was to calculate the current in the secondary and then the current in the primary coil. The turn-ratio equation and $P = VI$ were effortlessly used to arrive at the correct answer of 0.10 A. Full marks were rarely scored but many top-end candidates did manage to score a mark for suggesting that the lamp was lit for a short period of time at the start because *'there was a changing magnetic flux as the current increased from zero to a steady value'*. Too many answers focussed on the requirement of an alternating supply for an induced e.m.f. in the secondary coil and how a battery is not an alternating supply.
			Total	13	

© OCR 2022. You may photocopy this page.

Created in ExamBuilder

STEMUP.CO.UK

Question			Answer/Indicative content	Marks	Guidance
17	a		**Level 3 (5 – 6 marks)** Clear planning and correct identification of terminals and position of components *There is a well-developed line of reasoning which is clear and logically structured. The information presented is clear relevant and substantiated.* **Level 2 (3 – 4 marks)** Clear planning and correct identification of some components / terminals *There is a line of reasoning presented with some structure. The information presented is in the most part relevant and supported by some evidence.* **Level 1 (1 – 2 marks)** Some planning and / or an attempt at identifying component / terminals *There is an attempt at a logical structure with a line of reasoning. The information is in the most part relevant.* **0 marks** *No response or no response worthy of credit.*	B1 × 6	**Use level of response annotations in RM Assessor, e.g. L2 for 4 marks, L2^ for 3 marks, etc.** **Indicative scientific points may include:** **Planning** • suitable circuit arrangements / diagrams drawn between two points which could be connected to the box terminals • use of R to limit current, e.g. to find CD terminals • logical plan of connection across terminals e.g. connect circuit to each pair of terminals in turn • identify terminals C and D as the circuit with the largest current / smallest resistance • A and B identified because CD known **or** the circuit including terminals AC / D has the smallest current / largest resistance **Identifying** • $V = IR$ quoted or used in calculations • $R_T = \Sigma R$ used to determine the 220Ω or the 470Ω resistors • For 220 Ω resistor (between AB or BC / D) current is 27 (mA) A **or** 19 (mA) with R • For 470 Ω resistor (between AB or BC / D) current is 13 (mA) **or** 11 (mA) with R • For both resistors (between AC / D) current is 8.7 (mA) **or** 7.6 (mA) with R • For wire (between CD) current is 0.060 A **Examiner's Comments** This level of response (LoR) question had two strands – planning how to determine the positioning of two resistors inside an unlabelled four terminal box and then verifying the values of their resistances.

© OCR 2022. You may photocopy this page.

Created in ExamBuilder

STEMUP.CO.UK

Question			Answer/Indicative content	Marks	Guidance
					Some candidates concentrated on determining the labelling of the terminals; others assumed the positions and explained how the resistances could be determined. Many candidates made the task more difficult than necessary. For example it was intended that once terminals **C** and **D** had been identified, **C** could only be lower left and not lower right, and hence the positions of **A** and **B** were also identified. A very common circuit used to determine the resistances placed the supply between **A** and **C** with the given resistor **R** between **B** and **D,** leading to calculations requiring combinations of resistors in series and parallel. Many ignored the limiting resistor **R** and probed the box without it, a few stating that the current between **C** and **D** would be zero with the supply across **CD.** Some answers lacked any circuit diagram and some 15% failed to attempt the question. Weaker candidates were confused as to when the resistors were connected in series or in parallel. Generally, the responses were clearer in terms of planning than identifying. Comments such as *and then you can work out the arrangement of the resistors* were common without showing how this could be done. A small number of candidates introduced a voltmeter and others wanted to position the ammeter 'inside' the box.
	b	i		B1	two arrows needed **not** across resistor; allow a surrounding circle with arrows outside circle

STEMUP.CO.UK

Question			Answer/Indicative content	Marks	Guidance
		ii	1 from graph 3.0 (kΩ) $I = 4.0 / 3.0 = 1.33 \times 10^{-3}$ A or $R = 2.0 / 4.0 \times 3.0 \times 10^{3}$ $R = (6.0 – 4.0) / 1.33 \times 10^{-3}$ $= 1.5 \times 10^{3}$ (Ω) 2 at 2.4 V R_{LDR} = 1.0 kΩ giving 2.5 (W m^{-2})	B1 C1 A1 M1 A1	**allow** 3.1 ± 0.1 (kΩ) **accept** 1.3 mA; **accept** potential divider argument **allow** 1.5 kΩ; **special case:** using 2.4 V in place of 4.0 V gives R = 4.5 kΩ; give 1 mark out of 2 **ecf (b)(ii); allow** potential divider or I = 2.4 mA; **for special case:** R_{LDR} = 9.0 kΩ ; give 1 mark out of 2 allow 2.4 to 2.6 W m^{-2} **N.B. remember to record a mark out of 5 here** **Examiner's Comments** More than half of the candidates knew the correct circuit symbol for an LDR. The most common error was to draw an LED. More candidates used a potential divider approach to solve the problem than calculated the current in the circuit; many gaining full marks. Those who misread the question and reversed the voltages required to switch the lamp on and off were given some credit for their answers.
			Total	12	

STEMUP.CO.UK

Question			Answer/Indicative content	Marks	Guidance
18	a		Level 3 (5–6 marks) Clear description and analysis *There is a well-developed line of reasoning which is clear and logically structured. The information presented is relevant and substantiated.* Level 2 (3–4 marks) Some description and some analysis *There is a line of reasoning presented with some structure. The information presented is in the most-part relevant and supported by some evidence.* Level 1 (1–2 marks) Limited description or analysis *There is an attempt at a logical structure with a line of reasoning. The information is in the most part relevant.* 0 marks No response or no response worthy of credit.	B1 × 6	Indicative scientific points may include: Description Determine R_0 using ice water mixture or* Record V and I for various temperatures If wire is not insulated some conduction through water/use insulated wire Use small current to minimise heating effect or connect to supply for short time for readings Stir the water Wait for temperature to stabilise/bath to come to equilibrium Avoid parallax errors when reading instruments Comment about large scale increments on instruments/digital meters for precision of measurements/AW Analysis • Determine resistance from $R = V/I$ • Graph of R against θ is a straight line / Graph of R/R_0 against θ is a straight line • Correct interpretation of gradient m to find k; i.e. $k = m/R_0$ or $k = m$ • *R_0 by extrapolation from linear graph *descriptors D1 and A4 are alternatives <u>Examiner's Comments</u> This question proved to be a suitable starter as almost all wrote a full page answer or even completed it on one of the spare pages at the back of the examination booklet. The majority of candidates described the basic procedure to perform the experiment. There was a small group who did not appreciate that R_0 referred to 0°C but took it to be their initial room temperature. Some of these contradicted themselves once they reached the analysis of data section

STEMUP.CO.UK

Question			Answer/Indicative content	Marks	Guidance
					of their answer. Some started with ice water whilst others just found R_0 by extrapolation from the graph. A few good candidates compared both methods as a check on the reliability of their experiment. The example (exemplar 1) of an L3 answer shown here implies this check without stating it clearly. Exemplar 1 At a variety of temperatures ~~record~~ from 0–100° ~~so~~ in 10°C intervals record the current & voltage of the wire. Do this when you ~~do~~ keep the temperature constant and the wire is also at this temperature. ie hold it at the temperature for 2 mins before taking results. Also stir the water to ensure it is all the same temperature. Once you have ~~as~~ results for all temperatures. Repeat twice more and take averages. Work out the resistance for each temperature using $\frac{V}{I} = R$. Plot a graph of $\frac{R}{R_0}$ against θ where R_0 is the value you got for ~~a~~ 0°C or as close to this temperature you could get. Plot a line of best fit & work out the ~~gra~~ gradient. ~~Ad~~ If it is a straight line then the relationship is true. The gradient should be k and the y intercept 1. This graph ~~k~~ gives the value for k. To improve accuracy you should repeat the experiment a multiple times and take ~~an~~ average gradient to give a more accurate result. You should ~~as~~ get your water & thus coil to 0°C, or as close possible, to give ~~a~~ a more precise value for R_0. About half of the candidates remembered to stir the heating water. Only a minority allowed time for thermal equilibrium to be reached with the heating removed before taking measurements. Many did not state how they heated the water which was important because a group described using the given nichrome wire and supply for this purpose. Many wanted to take the unnecessary precaution of lagging the beaker or using a lid to avoid heat loss. One sensible improvement suggested was to use a digital thermometer in place of the one in the diagram. The advantages of this change were not always explained.

STEMUP.CO.UK

Question			Answer/Indicative content	Marks	Guidance
					The candidates were able to explain how to process the data to obtain a value for *k*. Only a very few did not draw a graph. As in question 5b many are not clear about the difference between a linear and a proportional relationship. A good exposition describing a suitable graph with a *y* -intercept of R_0 could be ruined by the statement that the graph showed that *R* was proportional to *θ*.
	b	i	$R = V^2/P$ or $P = V^2/R$ $R = 230^2/1000 = 52.9$ or 53(Ω)	C1 A1	or $P = VI$ and $R = V/I$ with $I = 4.34$ (A) This is a 'show that' question so the A1 mark is for giving both the full substitution of values and the final answer. The final answer may be to 2 or more SF.
		ii	number of turns, n = 180/1.5 (= 120) length $(l = \pi dn) = 3.14$ (or π) × 0.014 × 120 = 5.28 (m)	C1 A1	 This is a 'show that' question so the A1 mark is for giving both the full substitution of values and the final answer. The final answer may be to 2 or more SF.
		iii	$A = (\rho l/R) = 1.1 \times 10^{-6} \times 5.28/52.9$ $A = 0.11 \times 10^{-6}$ (m^2) so swg = 28	M1 A1 A1	**allow** 53 **allow** solution which calculates diameter of wire using $\pi d^2/4$ rather than finding *A* **give max** 1/3 for using data from the table, i.e. finding *R* = 53 Ω using correct value of *A* or $d = 0.37$ (mm) the A marks cannot be-awarded unless the M mark is awarded. <u>Examiner's Comments</u> The purpose of this question was to challenge the candidates to use their knowledge to solve a laboratory based practical problem. The majority approached part (i) correctly by considering the power data for the fire element. A significant minority were drawn to the formula relating resistance and resistivity. Many of these realised that this approach was incorrect and changed to the correct approach. Here is a typical

STEMUP.CO.UK

Question			Answer/Indicative content	Marks	Guidance
					example (exemplar 2) of a script where the candidate continued to complete the whole question correctly. The rest remained at a loss and did not gain any marks for parts (ii) and (iii). Exemplar 2 $R = \frac{\rho l}{A} = \frac{1.1 \times 10^{-6} \times 0.18 \times \pi \times 0.014}{\pi \times \left(\frac{0.014}{2}\right)^2}$ $P = \frac{V^2}{R}$ $R = \frac{V^2}{P} = \frac{230^2}{1000} = 52.9\,\Omega \approx 53\,\Omega$ In part (ii) a minority again tried the resistivity formula rather than an approach using geometry. Finally in part (iii) the resistivity formula was applied with success. The question overall proved to be a good discriminator of ability and understanding.
			Total	13	
19			A	1	
			Total	1	

STEMUP.CO.UK

Question			Answer/Indicative content	Marks	Guidance
20	a		$\left(R = \frac{V}{I} = \frac{W}{QI} ;\ Q = It \right)$ charge → A s **or** energy → kg m s^{-2} × m **or** kg m^2 s^{-2} (base units) kg m^2 A^{-2} s^{-3}	C1 A1	**Allow** other correct methods **Allow** *Q* or *C* **or** coulomb for 'charge'; *E* **or** *W* **or** joule **or** J **or** work done for 'energy' **Allow** 1 mark for J s^{-1} A^{-2} **Allow** $\frac{\text{kg m}^2}{\text{A}^2\text{s}^3}$ **or** kg m^2 /(A^2 s^3) **Not** kg m^2 / A^2 / s^3 **or** kg m^2 / s^3 / A^2 <u>Examiner's Comments</u> This was a challenging question, which provided the ideal opportunity for top-end candidates to use a variety of methods to get the correct S.I. base units of kg m^2 A^{-2} s^{-3} for resistance. A significant number of candidates secured 1 mark for a partial answer with either charge → A s, or energy → kg m^2 s^{-2}. The rules for exponents were a bit perplexing for the low-scoring candidates. Many also misunderstood S.I. units. Exemplar 4 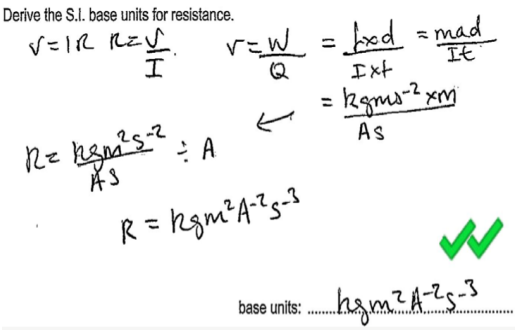 This exemplar illustrates a flawless answer from a top-end candidate. The equations are clear to see and follow. The units of each physical quantities are clearly identified and the appropriate S.I. units for the quantities have been

STEMUP.CO.UK

Question			Answer/Indicative content	Marks	Guidance
					successfully manipulated to give the correct answer. Compare this with the exemplar below which illustrates a common misconception. **Exemplar 5** 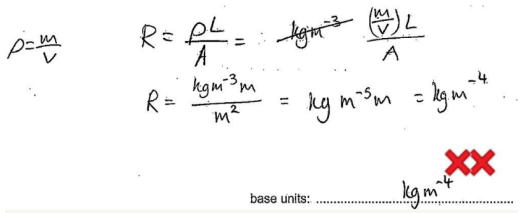 This exemplar illustrates a common error made by some candidates across the ability spectrum. The resistivity ρ in the equation for resistance has been mistaken for density (which unfortunately has the same label). There can be no credit for wrong physics. It is vital to know your equations. **Key:** **Misconception**

STEMUP.CO.UK

Question			Answer/Indicative content	Marks	Guidance
	b	i	$(R =) \frac{6.0}{0.150}$ $R = 40\ \Omega$	M1 A0	**Allow** any correct value of V (± 0.1 V) divided by the correct value of I (± 10 mA) from the straight line for **R** <u>Examiner's Comments</u> The majority of the candidates scored 1 mark here for clearly using the graph to show the resistance of **R** to be 40 Ω. Most used a data point from the straight line. A significant number also used the idea that the gradient of the straight line is equal to the inverse of the resistance. However, candidates are reminded that resistance is equal potential difference divided by current, but in this context of a straight line through the origin, determining resistance from the gradient was allowed. Of course, determining the gradient of a curve is simply incorrect physics for determining resistance.
		ii	(V_L =) 1.4 (V) **or** (V_R =) 4.0 (V) **or** (R_T =) 6.0/0.1 (Ω) ($V_{terminal}$ =) 5.4 (V) **or** (V_r =) 0.6 (V) **or** (r =) 60 – 54 (Ω) r = 6.0 (Ω)	C1 C1 A1	**Allow** full credit for other correct methods Possible ECF from **(i)** **Allow** ± 0.1 V for the value of p.d. from the graph **Note** getting to this stage will also secure the first C1 mark **Allow** 1 SF answer here without any SF penalt <u>Examiner's Comments</u> This was a discriminating question with many of the top-end candidates effortless getting the correct answer of 6.0 Ω for the internal resistance r. The most common error was omitting the resistance of the filament lamp in the calculation. This gave an incorrect value of 20 Ω for the internal resistance. Candidates doing this still managed to pick up 1 mark for the total resistance of 60 Ω.

© OCR 2022. You may photocopy this page.

Created in ExamBuilder

STEMUP.CO.UK

Question			Answer/Indicative content	Marks	Guidance
		iii	$\rho = \frac{40 \times 2.4 \times 10^{-6}}{8.0 \times 10^{-3}}$ (Any subject)	C1	Allow ECF
			ρ = 0.012 (Ω m)	A1	Allow 1 mark for either 0.018 for using 60 Ω, 0.016(2) for using 54 Ω or for 0.0018 for 6.0 Ω <u>Examiner's Comments</u> The success in this question depended on understanding the term *n* in the equation *I* = *Anev* given in the Data, Formulae and Relationship booklet. A significant number of candidates took *n* to be the total number of charge carriers within the volume of **R**, instead of the number of charge carriers per unit volume (number density). Those who appreciated this had no problems coping with prefixes and powers of ten. The correct answer was 7.7×10^{-3} m s^{-1}. Using 6.5×10^{17} for the number density, gave an answer of 4.0×10^{5} m s^{-1}; examiners credited 1 mark for this incorrect answer, mainly for the manipulating and using the equation *I* = *Anev*. **Exemplar 6** 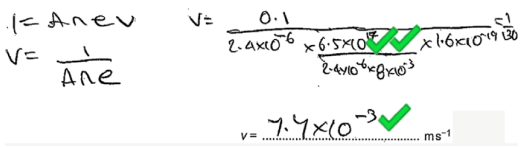 This exemplar illustrates a perfect answer from a C-grade candidate. The equation has been rearranged correctly and the substitution is all correct and easy to follow. The number density *n* has not been calculated separately – it forms an integral part of the whole calculation. The one big benefit of this is that you do not end up with rounding errors. A decent technique demonstrated here. All correct for 3 marks.

STEMUP.CO.UK

Question			Answer/Indicative content	Marks	Guidance
		iv	$n = \frac{6.5 \times 10^{17}}{2.4 \times 10^{-6} \times 0.008}$ or $n = 3.385 \times 10^{25}$ (m^{-3})	C1	
			$v = \frac{0.100}{2.4 \times 10^{-6} \times 3.385 \times 10^{25} \times 1.60 \times 10^{-19}}$ (Any subject)	C1	**Note** do not penalise again for the same POT error
			$v = 7.7 \times 10^{-3}$ ($m\ s^{-3}$)	A1	**Allow** 1 mark for 4(.0) × 10^{5} ($m\ s^{-1}$); $n = 6.5 \times 10^{17}$ used
			Total	11	

STEMUP.CO.UK

Question			Answer/Indicative content	Marks	Guidance

21			Level 3 (5–6 marks)
			Clear explanation, some description **and** both resistance values correct
			
			There is a well-developed line of reasoning which is clear and logically structured. The information presented is relevant and substantiated.
			
			Level 2 (3–4 marks)
			Some explanation, limited or no description **and** both resistance values correct
			OR
			Clear explanation, limited or no description **and** calculations mostly correct / one correct calculation
			OR
			Clear explanation, some description **and** no calculations
			
			There is a line of reasoning presented with some structure. The information presented is in the most-part relevant and supported by some evidence.
			
			Level 1 (1–2 marks)
			Some explanation
			OR
			Some description
			OR
			Some calculation
			
			There is an attempt at a logical structure with a line of reasoning. The information is in the most part relevant.
			
			0 marks
			No response or no response worthy of credit
				B1 × 6	Indicative scientific points may include:
					
					Explanation of trace
					
					• The 'trace' is because of light reaching and not reaching LDR
					• Resistance of LDR varies with (intensity) of light
					• In light
					  ◦ resistance of LDR is low
					  ◦ p.d. across LDR is low
					  ◦ p.d across resistor (or *V*) is high
					  ◦ current in circuit is large
					• In darkness
					  ◦ resistance of LDR is high
					  ◦ p.d. across LDR is high
					  ◦ p.d across resistor (or *V*) is low
					  ◦ current in circuit is small
					• V_{max} = 4.0 V; V_{min} = 2.0 V
					• Potential divider equation quoted
					• Substitution into potential divider equation
					
					Description of determining frequency
					
					• Time between pulses is constant because of constant speed
					
					• Time between pulses = 0.4 (s)
					• $f = 1/T$
					• frequency = 2.5 (Hz)
					
					Calculations
					
					• Resistance of LDR is 150 (Ω) in light
					• Resistance of LDR is 1500 (Ω) in darkness
					
					<u>Examiner's Comments</u>
					
					This was one of the two LoR questions. It required understanding of potential dividers, light-dependent resistor and rotation frequency of a spinning plate.
					
					Examiners expect varied responses, and two very dissimilar answers can score

STEMUP.CO.UK

Question			Answer/Indicative content	Marks	Guidance
					comparable marks as long as the criteria set out in the answers' section of the marking scheme are met. Level 3 answers had the correct maximum and minimum resistance values of the LDR, a decent description and explanation of the trace shown in Fig. 17.2, and an outline of how the frequency of the spinning plate was determined. As mentioned earlier, eclectic answers are inevitable – verbose and concise answers can be at Level 3. In Level 2 answers there were generally missed opportunities. Half-done calculation and descriptions either with some errors or lacking in depth. Level 1 answers had some elements of calculations or descriptions. The two exemplars below, illustrate a Level 3 response and a Level 1 response. Exemplar 7 When the hole in the metal plate is directly above the LDR, light shines the LDR. This causes the resistance on the LDR to decrease. This means that the total resistance of the circuit decreases, so the current flowing in the circuit increases. As the resistance of the fixed resistor is constant and current increases, the p.d. across it (V) must increase by $V = IR$. This can also be shown using the potential divider equation: $V_{out} = \frac{R_2}{R_1 + R_2} \times V_{in}$, where V_{out} is the p.d. across the fixed resistor (V). We can rearrange this equation to find the resistance of the LDR both when light is and isn't shining on it. For when light isn't shining on it: $(2.0) = \frac{(1.2\times10^3)}{R_{max} + (1.2\times10^3)} \times (4.5) \Rightarrow R_{max} = 1500\Omega$ For when light is shining on it: $(1.0) = \frac{(1.2\times10^3)}{R_{min} + (1.2\times10^3)} \times (4.5)$, $R_{min} = 150\Omega$ The frequency can be found by first finding the period, T. This is the time taken for the voltage p.d. (V) to return to the same value. This is $T = 0.4s$. Finally the inverse of this will give the frequency $f = 1/T = \frac{1}{0.4} = 2.5Hz$. L3 This is a Level 3 response from a top-end candidate who scored 6 marks. The description of the variation of the resistance of the LDR, the circuit current and the potential difference across the fixed resistor is perfect. The calculations of

STEMUP.CO.UK

Question			Answer/Indicative content	Marks	Guidance
					the LDR resistances are nicely embedded into the general explanation. The calculation of the frequency is all correct. This is a model answer for 6 marks. Compare and contrast this with the Level 1 response below. **Exemplar 8** When the light shines through the hole onto the LDR, the resistance decreases, causing the pd across the fixed resistor to increase., and vice versa when the light is blocked again. Determine the frequency by seeing how long the plate takes to rotate, so from pd increase to pd increase, 0·4 seconds frequency = $\frac{1}{T}$ frequency = 2·5 L1 This is a Level 1 response from an E-grade candidate. The description of the variation of the resistance of the LDR is correct. However, there are no calculations of the resistance of the LDR, as required in the question. Hence, a significant part of the question has been omitted. According to the marking criteria, this could only score Level 1. The examiner credited 2 marks for this response.
			Total	6	

STEMUP.CO.UK

Question			Answer/Indicative content	Marks	Guidance
22			B	1	<u>Examiner's Comments</u> This was a question on combining together three important expression in the topic of electricity; $V = IR$, $R = \rho L/A$ and $I = Anev$. On top of this, there was the additional information that **P** and **Q** were in parallel and hence the potential difference across each wire was the same. The mean drift velocity v of the electrons is given by the expression $v = \frac{V}{ne\rho L} \propto \frac{1}{L}$. The cross-sectional area A, and hence the diameter d of the wire has no effect on v. The relationship above implies that for wire **Q**, $v = \frac{1}{3} \times 0.60 = 0.20$ mm s^{-1}. The correct answer is **B**. All the distractors were equally popular. About a third of the candidates, mostly from the very top end of the ability range, were successful in this very demanding question.
			Total	1	

STEMUP.CO.UK

Question			Answer/Indicative content	Marks	Guidance
23	a		$L \rightarrow$ [m] and $A \rightarrow$ [m^2] or $L/A \rightarrow$ [m^{-1}] kg m^3 s^{-3} A^{-2}	C1 A1	**Allow** $\frac{\text{kg m}^3}{\text{s}^3\ \text{A}^2}$ or kg m^3/s^3 A^2 <u>Examiner's Comments</u> The majority of the candidates effortlessly showed the base units for resistivity to be kg m^3 s^{-3} A^{-2}. The structure from most was immaculate. It was good to see shortcuts being used too. Some candidates went straight to the units for resistivity (Ω m), and then multiplied the units given for resistance multiplied by m. Misconception The most common misconception, mainly at the lower end, was that the A in the resistance equation was the unit for current, the ampere A. This led to the incorrect answer kg ms^{-3} A^{-1}
	b	i	Line of best fit drawn gradient = 2.8	B1 B1	Expect the extrapolated line to have a y-intercept in the range 0.60 to 0.85 **and** at least one data point on each side of the line **Allow** gradient of line in the range 2.60 to 3.00 <u>Examiner's Comments</u> In **(c)(i)**, the lines of best fit were generally very good, as were the gradient calculations with most candidates getting values in the range 2.60 to 3.00. Only a small number of candidates calculated the inverse of the gradient.

© OCR 2022. You may photocopy this page.

Created in ExamBuilder

STEMUP.CO.UK

Question			Answer/Indicative content	Marks	Guidance
		ii	$E = I(r + R)$ and $R = \rho L/A$ $\frac{1}{I} = \frac{r}{E} + \frac{\rho}{AE}L$ (and comparison with $y = mx + c$ leads to gradient $\frac{\rho}{AE}$)	C1 A1	Allow $E = V + IR$ and $R = \rho L/A$ <u>Examiner's Comments</u> Most candidates struggled with **(c)(ii)**. Less than 1 in 10 candidates successfully used the equations $E = V + Ir$ and $R = \frac{\rho L}{A}$ to derive the expression $\frac{1}{I} = \frac{\rho}{AE}L + \frac{r}{E}$, and then identified the gradient as $\frac{\rho}{AE}$ by comparison with the equation for a straight-line $y = mx + c$.
		iii	(ρ = gradient × AE) $\rho = 2.8 \times \pi \times (0.19 \times 10^{-3})^2 \times 1.5$ $\rho = 4.8 \times 10^{-7}$ (Ω m)	 C1 A1	Possible ECF from **(i)** **Note** not using $A = \pi r^2$ is wrong physics (XP) **Allow** 1 mark for 1.9×10^{-6}, diameter used instead of radius <u>Examiner's Comments</u> Most candidates in **(c)(iii)** did exceptionally well to calculate the resistivity using the equation for the gradient. Calculations were generally well-structured, and the final answer showed good use of powers of ten and significant figures.

© OCR 2022. You may photocopy this page.

Created in ExamBuilder

STEMUP.CO.UK

Question			Answer/Indicative content	Marks	Guidance
		iv	The graph / points just shift horizontally (AW) The gradient is unchanged (and *ρ* will be the same)	B1 B1	**Allow** shifted to the right or left / 'systematic error' / zero error / change in length stays the same / 'no change in vertical values' <u>Examiner's Comments</u> Finally, **(c)(iv)** provided good discrimination with many of the top end candidates realising the gradient of the line was unaffected, the line was just shifted horizontally. 'Systematic error' and 'zero error' were allowed as alternative answers for the horizontal translation of the line. **Misconception** There were some missed opportunities, with some candidates making the following mistakes. • In **(c)(ii)**, ignoring the internal resistance *r* of the cell shown in the circuit of **Fig. 18.1** to get the wrong expression $\frac{1}{I} = \frac{\rho}{AE}L$ • In **(c)(iii)**, a small number of candidates either used 0.38 mm as the radius of the wire to get a resistivity of 1.9×10^{-6} Ω m or forgot to convert the millimetres into metres to get a value of 0.48 Ω m. • In **(c)(iv)**, a significant number of low-end candidates, mentioned that resistivity of the wire did not depend on its physical dimensions, and therefore the resistivity value calculated will be the same. There was no reasoning in terms of gradient = $\frac{\rho}{AE}$
			Total	**10**	

© OCR 2022. You may photocopy this page.

Created in ExamBuilder

STEMUP.CO.UK

Question			Answer/Indicative content	Marks	Guidance
24	a		current = 0.01 (A) p.d. = 0.01 × 50 (= 0.50 V)	M1 A1	<u>Examiner's Comments</u> This was an accessible question on determining the p.d. across the LED using the data from **Fig. 19.2**. The universal approach was short and precise: V = 0.01 × 50 = 0.50 V. However, a significant number of candidates used a longer route involving the potential divider rule and the 250 Ω resistance of the LED.
	b		(V_{75} =) **0.5 + 2.5** (V) **or** (R_{LED}) = **250** (Ω) **or** (R_p =) **60** (Ω) (I_{100} =) **0.05** (A) (E = 3.0 + 0.05 × 100) E = 8.0 (V)	C1 C1 A1	**Allow** other correct methods **Note** there is no ECF from (**a**) **Allow** 1 SF for the p.d. of 3 (V) There is no ECF here from wrong physics (XP) from the parallel network **Allow** 1 SF answer of 8 <u>Examiner's Comments</u> The analysis of the circuit proved to be problematic with most of the candidates getting as far as calculating either the resistance of the LED as 250 Ω or the p.d. across the LED-50 Ω resistor combination as 3.0 V. The stages thereafter demonstrated all the usual misconceptions; these are summarised later. About a quarter of the candidates produced flawless solutions using a range of techniques from Kirchhoff's two laws to potential dividers. The simplest solution had the correct current of 0.050 A in the 100 Ω resistor, followed by the correct value of the e.m.f. of 8.0 V. This type of solution is shown in exemplar 7. **Misconception** These were the most common errors made in calculating the e.m.f. of the power supply.

© OCR 2022. You may photocopy this page.

Created in ExamBuilder

STEMUP.CO.UK

Question			Answer/Indicative content	Marks	Guidance
					• Calculating the total resistance of the parallel network by omitting the resistance of the LED. • The current in the 100 Ω resistor was the same as the current of 0.010 A in the LED. • The current in the 100 Ω resistor was the same as the current of 0.040 A in the 75 Ω resistor. • Using the potential divider equation by completely omitting the LED-50 Ω resistor series network. Exemplar 7 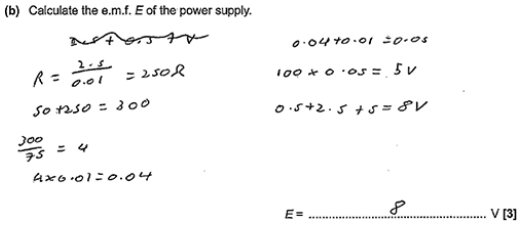 (b) Calculate the e.m.f. *E* of the power supply. $R = \frac{2.5}{0.01} = 250\Omega$ $50 + 250 = 300$ $\frac{300}{75} = 4$ $4 \times 0.01 = 0.04$ $0.04 + 0.01 = 0.05$ $100 \times 0.05 = 5V$ $0.5 + 2.5 + 5 = 8V$ *E* = 8 V [3] This exemplar shows a perfect response from a middle-grade candidate. The response should have been written to 2 SF. However, because the answer was 8.0 V, a 1 SF response was allowed without incurring any penalty.
			Total	5	

© OCR 2022. You may photocopy this page.

Created in ExamBuilder

STEMUP.CO.UK

Question			Answer/Indicative content	Marks	Guidance
25	a	i	$R = \frac{150}{1.5^2}$ 67 Ω	C1 A1	**Allow** $V = \frac{150}{1.5} = 100\ \text{V}$ <u>and</u> $R = \frac{100}{1.5}$
		ii	Q = 1.5 × 5.0 × 60 × 60 or 27000 $N = \frac{1.5 \times 5.0 \times 60 \times 60}{1.6 \times 10^{-19}}$ =1.7 x 10^{23}	C1 A1	**Note** use of 150 (W) does not score 1.7 × 10^{25} 1.68 × 10^{23} 4.7 × 10^{19} scores one mark **Not** 1.7 × 10^{25} (uses 150 W)
		iii	$v = \frac{1.5}{7.9 \times 10^{28} \times 4.1 \times 10^{-9} \times 1.6 \times 10^{-19}}$ 0.029 (m s^{-1})	C1 A1	
	b		150 (× 10^{-3}) × 5 × 16 12 (p)	C1 A1	**Not** time in minutes or seconds **Allow** ECF for POT on power
	c		Silicon will have a smaller number density, ORA Silicon will have a larger resistivity, ORA	B1 B1	**Allow** semiconductor for silicon; metal for nichrome <u>Examiner's Comments</u> High achieving candidates found this question straightforward. Some candidates on (a)(iii) used *N* instead of *n.* Part (b) caused the most difficulty with candidates either using 150 W rather than 0.150 kW or changing the time to seconds. **Misconception** The worst acceptable line is either the steepest line that passes within all the error bars or the shallowest error line that passes within all the error bars.
			Total	**10**	
26			D	1	
			Total	**1**	

STEMUP.CO.UK

Question			Answer/Indicative content	Marks	Guidance
27	a		There is no contact force between the astronaut and the (floor of the) space station (so no method of measuring / experiencing weight)	B1	**Allow** astronaut and the space station have same acceleration (towards Earth) / floor is falling (beneath astronaut) Examiner's Comments Misconception Experiencing weightlessness is not the same as being in freefall There was a lack of understanding of the nature of feeling weightless. The sensation of 'weightlessness' is a lack of the physiological sensation of 'weight'. The skeletal and muscular systems are no longer in a state of stress. This sensation is caused by a lack of contact forces as a result of the ISS and the astronaut experiencing the same acceleration. Common incorrect responses included: • the astronaut is weightless because he is falling • there is no resultant force on the astronaut • gravity is too weak to have any effect on the astronaut • the ISS orbits in a vacuum where there is no gravity.

© OCR 2022. You may photocopy this page.

Created in ExamBuilder

STEMUP.CO.UK

Question			Answer/Indicative content	Marks	Guidance
	b	i	M = 5.97 x 10^{24}(kg) **or** ISS orbital radius R = 6.78 x 10^6(m) **or** $g \propto 1/r^2$ (gr^2 = constant so) g x (6.78 x $10^6)^2$ = 9.81 x (6.37 x $10^6)^2$ g = 8.66 (N kg^{-1})	C1 C1 A1	**or** g (= GM/R^2) = 6.67 x 10^{-11} x 5.97 x 10^{24} / (6.78 x $10^6)^2$ **Allow** rounding of final answer to 2 SF i.e. 8.7 (N kg^{-1}) <u>Examiner's Comments</u> The simplest method here was to use the fact that g is inversely proportional to r^2, so gr^2 = constant. If this was not used, a value for the mass of the Sun had to be calculated, which introduced a further step. Candidates who omitted this calculation and used a memorised value of the Sun's mass instead were unable to gain full marks, because they invariably knew it to 1 s.f. only, whereas 3 were required. Errors occurred when candidates used the incorrect distance in the formula for g. Common errors included: • forgetting to square the radius • using the Earth's radius rather than the orbital radius of the satellite • calculating (6.37 × 10^6 + 4.1 × 10^5) incorrectly.
		ii	$2\pi r/T = v$ **or** T = 2 × 3.14 × 6.78 × 10^6 / 7.7 × 10^3 T = 5.5 × 10^3 s (= 92 min)	M1 A1	**ECF** incorrect value of R from **b(i)**

© OCR 2022. You may photocopy this page.

Created in ExamBuilder

STEMUP.CO.UK

Question			Answer/Indicative content	Marks	Guidance
	c		$\frac{1}{2}Mc^2$ ($\frac{1}{2}N_A mc^2$) $= \frac{3}{2}RT$ = c^2 = 3 × 8.31 × 293 / 2.9 × 10^{-2} = 2.52 × 10^5 $\sqrt{c^2}$ = 500 (m s^{-1}) (= 7.7 × 10^3 / 15)	C1 C1 A1 A0	or $\frac{1}{2}mc^2 = \frac{3}{2}kT$ or $c^2 = 3kT/m$ or c^2 = 3 ×1.38 x 10^{-23} × 6.02 x 10^{23} x 293/2.9 × 10^{-2} = 2.52 × 10^5 not (7.7 × 10^3 / 15) = 510 (m s^{-1}) Examiner's Comments The success in this question depended on understanding the meaning of the term *m* in the formula $\frac{1}{2}m\overline{c^2} = \frac{3}{2}kT$ given in the Data, Formulae and Relationship booklet. A significant number of candidates took *m* to be the mass of one mole (the molar mass, *M*) whereas *m* is actually the mass of one molecule. Candidates who used the formula $\frac{1}{2}M\overline{c^2} = \frac{3}{2}RT$ were usually more successful because the molar mass had been given in the question stem.
	d		power reaching cells (= *IA*) = 1.4 × 10^3 × 2500 = 3.5 × 10^6 W power absorbed = 0.07 × 3.5 × 10^6 = 2.45 × 10^5 W cells in Sun for (92 – 35 =) 57 minutes average power = 57/92 × 2.45 × 10^5 = 1.5 × 10^5 (W)	C1 C1 C1 A1	mark given for multiplication by 0.07 at any stage of calculation (90 – 35 =) 55 minutes using *T* = 90 minutes ECF value of *T* from **b(ii)** 55/90 × 2.45 × 10^5 = 1.5 × 10^5 (W) using *T* = 90 minutes Examiner's Comments Although this question looked daunting, it was actually quite linear and many candidates who attempted it were able to gain two or three marks even if they did not eventually get to the correct response. Candidates who set out their reasoning and working clearly were more liable to gain these compensatory marks.
			Total	13	

STEMUP.CO.UK

Question			Answer/Indicative content	Marks	Guidance
28	a		(V_R =) 2.7 (V) **or**(current =) 0.018 (A) (ratio = $\frac{0.018 \times 1.8}{0.018 \times 2.7}$) ratio = 0.67	C1 A1	**Note** the mark can be scored on circuit diagram **Note** values of powers are: 0.0324 W and 0.0486 W **Allow** 2/3; **Not** 0.66 (rounding error)
	b	i	In darkness LDR has more resistance / p.d. across LDR is large **or** In light LDR has less resistance / p.d. across LDR is small Clear idea that when the LED is on, this will force the p.d. across LED / LDR to decrease, forcing the LED to switch off (ORA) (The cycle of LED switching on and off is repeated)	B1 B1	 Note the explanation must be in terms of p.d. / potential divider. **Ignore** current
		ii	A sensible suggestion, e.g. Point the LED away from the LDR / increase distance (between LED and LDR) / insert a card between (LED and LDR)	B1	
			Total	5	

STEMUP.CO.UK

Question			Answer/Indicative content	Marks	Guidance
29			Level 3 (5–6 marks) Clear description **and** clear analysis of data *There is a well-developed line of reasoning which is clear and logically structured. The information presented is relevant and substantiated.* Level 2 (3–4 marks) Some description **and** some analysis of data OR Clear description OR Clear analysis of data *There is a line of reasoning presented with some structure. The information presented is in the most-part relevant and supported by some evidence.* Level 1 (1–2 marks) Limited description **and** limited analysis OR Some description OR Some analysis of data *There is an attempt at a logical structure with a line of reasoning. The information is in the most part relevant.* 0 marks No response or no response worthy of credit	B1×6	Indicative scientific points may include: Description • Circuit showing supply, ammeter, voltmeter and resistance wire / coil • Measure I (in coil) with ammeter • Measure V (across coil) with voltmeter • Power (for coil) calculated: $P = VI$ • Resistance of thermistor either calculated using $R = V/I$ **or** measured with ohmmeter • Change P / change V / use variable power supply / use variable resistor (to change I) • Keep the number of turns of coil constant throughout / no draughts / wait until the resistance stabilises Analysis • $\lg P = \lg k + n \lg R$ (or natural logs ln) • Plot a graph of $\lg P$ against $\lg R$ • If expression is correct, then a straight line with non-zero intercept • gradient = n • intercept = $\lg k$ • $k = 10^{\text{intercept}}$ (or $k = e^{\text{intercept}}$ for natural logs)
			Total	6	

© OCR 2022. You may photocopy this page.

Created in ExamBuilder

STEMUP.CO.UK

Question			Answer/Indicative content	Marks	Guidance
30		i	$12\,000 = \frac{Q}{4\pi\varepsilon_0 r}$ $12\,000 = \frac{Q}{4\pi\varepsilon_0 \times 0.19}$ $Q = 2.5(4) \times 10^{-7}$ (C)	C1 C1 A0	**Allow** $E = (V / d =)\ 6.316 \times 10^4$ **C1** and $E = 6.316 \times 10^4 = \frac{Q}{4\pi\varepsilon_0 \times 0.19^2}$ **C1**
		ii	**1** $t = 78 \times 3600$ $(I =) \frac{2.5 \times 10^{-7}}{78 \times 3600}$ $I = 8.9 \times 10^{-13}$ (A) **2** $(R =) \frac{6000}{9.0 \times 10^{-13}}$ **or** 6.7×10^{15} (Ω) **or** $V = IR$ and $R = \frac{\rho L}{A}$ $\frac{6000}{9.0 \times 10^{-13}} = \frac{\rho \times 0.38}{1.1 \times 10^{-4}}$ $\rho = 1.9 \times 10^{12}$ (Ω m)	C1 C1 A0 C1 C1 A1	There is no ECF from **(b)(i)** **Note** 2.54×10^{-7} gives an answer 9.0×10^{-13} A There is no ECF from **(b)(ii)1** **Take** 12000 V as **TE** for this C1 mark, then ECF **Note** 8.9×10^{-13} (A) gives an answer 2.0×10^{12} (Ω m)
			Total	7	
31			the current (induced in the aerial) is alternating (5×10^8 times per second) (so the meter would register zero) / AW **or** the diode (half-)rectifies the current / changes the current (from a.c.) to d.c. / AW	B1	**Allow** 'a diode only lets current pass through in one direction' AW <u>Examiner's Comments</u> Allowing a mark for the diode only letting current pass in one direction enabled many candidates to score this mark. There was little mention of alternating current among the responses.
			Total	1	

© OCR 2022. You may photocopy this page.

Created in ExamBuilder

STEMUP.CO.UK

Question			Answer/Indicative content	Marks	Guidance
32		i	$Vq = ½ mv^2$ and $\lambda = \frac{h}{mv}$	M1	**Allow** *p* for *mv* **Allow** *e* for *q* in **(b)(i)** – this is to be treated as a 'slip'
			Clear algebra leading to $\lambda^2 = \frac{h^2}{2mq} \times \frac{1}{V}$	A1	
		ii	**1** (% uncertainty in λ^2 =) 10%	C1	
			(% uncertainty in λ =) 5%	A1	**Note** 10 (%) on answer line will score the C1 mark
			2 Straight line of best fit passes through all error bars	B1	
			3 gradient = 1.0 (× 10^{-22})	C1	**Ignore** POT for this mark; **Allow** ± 0.20 (× 10^{-22})
			$\frac{h^2}{2mq} =$ gradient	C1	
			$\frac{(6.63\times10^{-34})^2}{2\times m\times 3.2\times 10^{-19}} =$ gradient	C1	Possible ECF for incorrect value of gradient
			$m = 6.9 \times 10^{-27}$ (kg) (hence about 10^{-26} kg)	A1	**Note check for AE** (condone rounding error here) **and** answer must be about 10^{-26} (kg) for any incorrect gradient value for this A1 mark **Special case**: 1.37×10^{-26} kg scores 3 marks for $q = 1.6 \times 10^{-19}$ C because answer is about 10^{-26} kg
			Total	**9**	

STEMUP.CO.UK