OCR A-LEVEL PHYSICS A · H556

PHYSICS

EXAM QUESTION PACK

3.2 FORCES IN ACTION

SCORE	PERCENTAGE
/256	%

STEMUP

These questions belong to OCR, not to us.

The examination questions, mark schemes and examiner comments in this pack were written and published by OCR. They are past assessment materials, reproduced here so that students can revise from them.

What we do not own

STEMUP is not affiliated with OCR and does not own, and makes no claim to own, any of the question, mark scheme or examiner report material in this pack. OCR has not endorsed, approved or been involved in the production of it. OCR and the qualification titles used here belong to their respective owners and appear for identification only.

Where to find the originals

OCR publishes its past papers, mark schemes and examiner reports free of charge. Always check the current specification at ocr.org.uk before you revise, because content and wording can change between series.

If you hold the rights to any material in this pack and would like it amended or removed, contact admin@stemup.co.uk and we will act on it.

1 A 2.0 m rigid rod with negligible weight is subject to forces in three different ways as shown in diagrams **1-3** below.

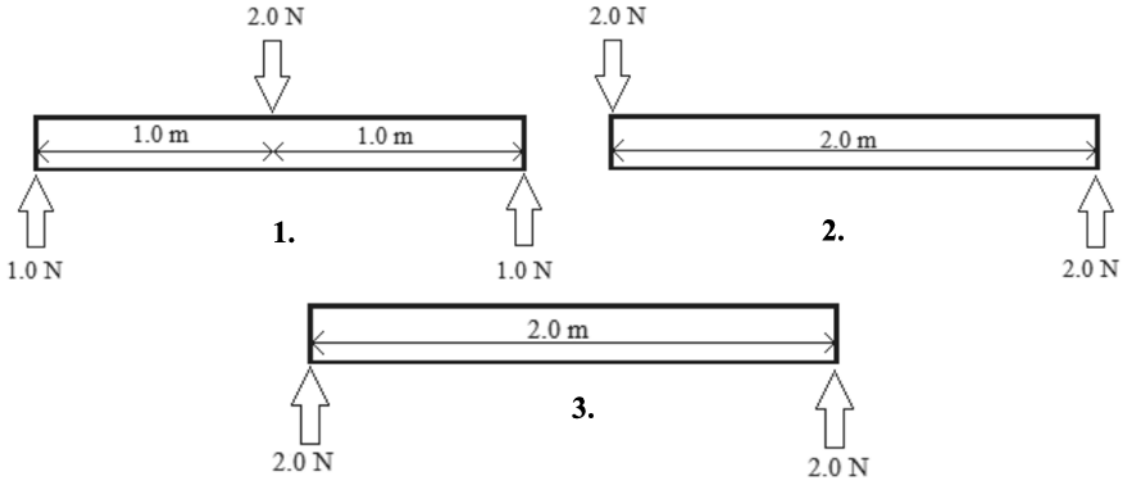

For the rod to be in equilibrium which of the diagrams above is / are correct?

A 1, 2 and 3
B Only 1 and 2
C Only 2 and 3
D Only 1

Your answer

[1]

STEMUP.CO.UK

2 A group of civil engineers are assessing whether or not to use solid concrete pillars or hollow metal tubes to support a building. One such tube is shown below. The tube is placed on a horizontal surface. The tube is made of metal of thickness *t*. The tube has height *h* and a mean internal radius *R*. The radius *R* >> thickness *t*.

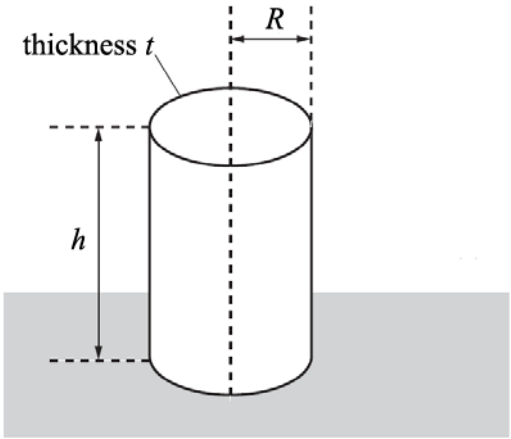

A heavy metal block of mass *m* is placed on top of the tube.

What is the approximate pressure *p* acting on the tube?

A $p = \dfrac{mg}{2\pi Rt}$

B $p = \dfrac{mg}{\pi R^2}$

C $p = \dfrac{mg}{\pi R^2 h}$

D $p = \dfrac{mg}{\pi R^2 t}$

Your answer ☐

[1]

STEMUP.CO.UK

3 A piece of flat A4 paper is dropped and falls to the floor. The same piece of paper is then collapsed into a ball and dropped again.

Which of the following will change in the second situation?

A the maximum magnitude of the air resistance
B the weight of the paper
C the time taken to reach terminal velocity
D the initial acceleration when dropped

Your answer ☐

[1]

STEMUP.CO.UK

4 In an experiment disc **X** moving at 1.5 ms^{-1} collides elastically with two other discs **Y** and **Z** which are touching and at rest. All the discs are identical. The positions of the discs are shown in **Fig. 19.3**.

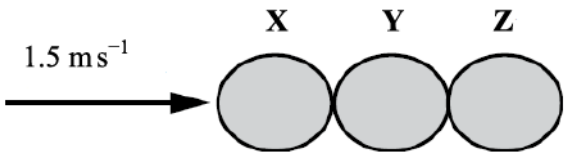

Fig. 19.3

(i) Draw arrows on **Fig. 19.3** to show the relative magnitude and direction of the forces which act on disc **Y** during the collision.

[1]

(ii) State the resultant force on **Y** during the collision.

---

[1]

(iii) Show that after the elastic collision **X** is at rest and **Z** moves with a velocity of 1.5 ms^{-1}.

[4]

STEMUP.CO.UK

5(a) Explain how Newton's law of gravitation is applied between two non-spherical asteroids.

---[1]

(b) Determine the average density of the Earth. The radius of the Earth is 6400 km.

average density = _____ kg m^{-3} **[3]**

6 Which physical quantity has the same base units as energy?

A moment
B momentum
C force
D pressure

Your answer ☐

[1]

STEMUP.CO.UK

7 The diagram below shows three forces acting on an object.

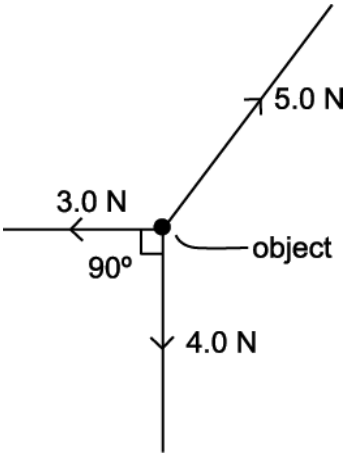

The object is **stationary.** All the forces lie in the vertical plane. The weight of the object is 4.0 N.

Which statement is **not** correct?

A The resultant force on the object is zero.
B The magnitude of the resultant force of 3.0 N and 4.0 N forces is 5.0 N.
C The magnitude of the vertical component of the 5.0 N force is 4.0 N.
D The resultant force in the horizontal direction is 3.0 N.

Your answer ☐

[1]

STEMUP.CO.UK

8 Fig.16 shows typical thinking, braking and stopping distances for **cars** driven at different initial speeds. The speed is shown in miles per hour (mph).

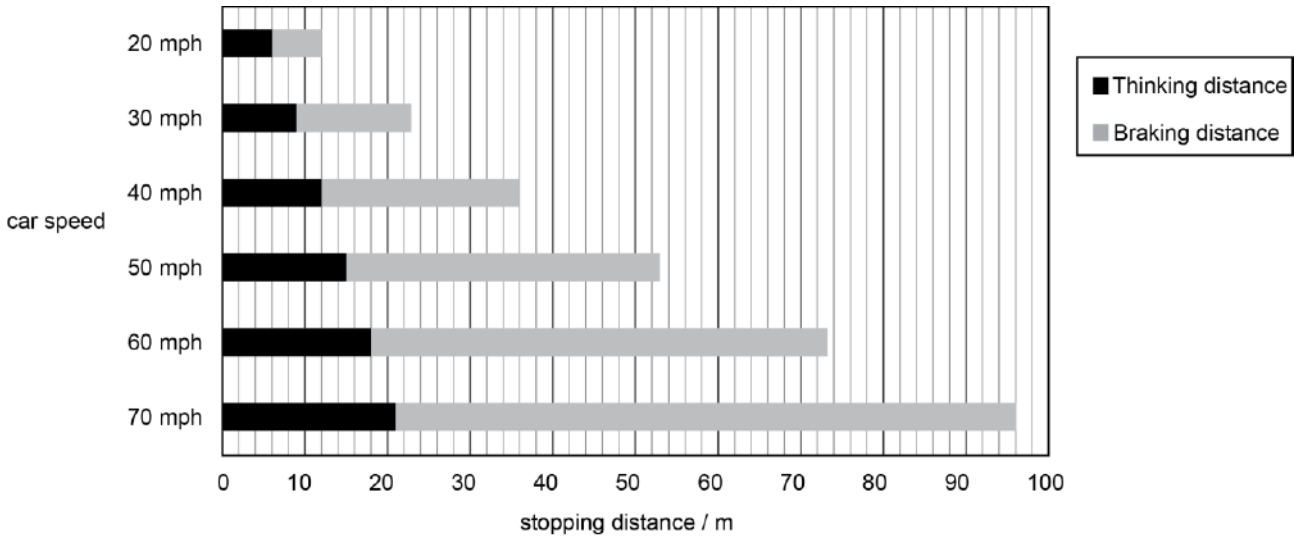

Fig. 16

A **truck** of mass 2300 kg is travelling at a constant speed of 22 m s^{-1} along a dry, level road. The driver reacts to a hazard ahead and applies the brakes to stop the truck. The reaction time of the driver is 0.97 s. The brakes exert a constant braking force of 8700 N.

(i) Calculate the magnitude of the deceleration of the truck when braking.

deceleration = _____ m s^{-2} **[2]**

(ii) Show that the stopping distance of the truck is about 85 m.

[3]

STEMUP.CO.UK

(iii) Show that a speed of 22 m s^{-1} is equivalent to about 50 mph (miles per hour). 1 mile = 1600 m

[1]

(iv) Use Fig. 16 and your answer to (**ii**) to compare the stopping distance of the car and the truck at 50 mph. Suggest relevant factors that may have affected the stopping distance of the truck.

---

[4]

STEMUP.CO.UK

9(a) State the *principle of moments*.

---[1]

STEMUP.CO.UK

(b) A gymnast hangs from the rings apparatus shown in Fig. 17.1. He raises his legs from a vertical to a horizontal position. Fig. 17.2 shows a simple model to demonstrate the forces exerted on his legs in the horizontal position. The total weight *W* of the legs is 260 N and acts at a point 40 cm from the pivot **P** in the hip. A force *T* is supplied by his hip flexor muscles which are attached to a point in the bone 3.0 cm from the pivot **P.** When horizontal, force *T* makes an angle of 50° with his legs.

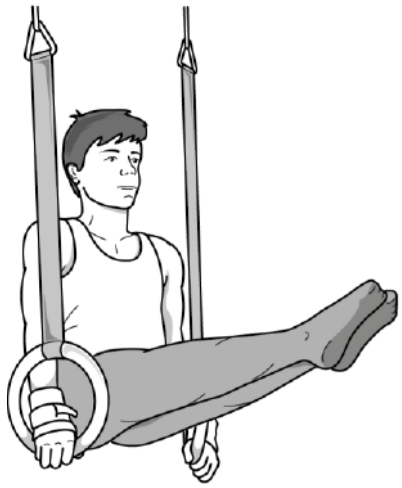

Fig. 17.1

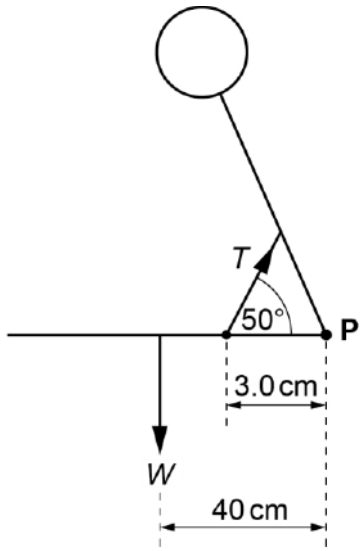

Fig. 17.2

(i) Take moments about **P** to calculate the force *T* needed to keep his legs horizontal.

T = _____ N **[3]**

(ii) Describe and explain the change in the force *T*, if any, as his legs are lowered from the horizontal position to vertical position.

_____

_____

_____

_____ **[2]**

STEMUP.CO.UK

10 A cylindrical cup of internal diameter 7.0 cm and height 8.5 cm is filled to the top with water.

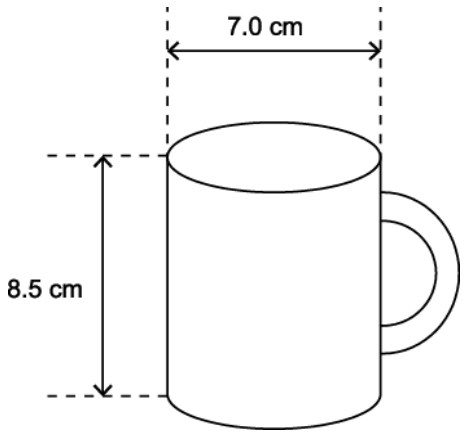

The density of water is 1000 kg m^{-3}. The mass of one mole of water is 18 g. The specific heat capacity of water is 4200 J kg^{-1} K^{-1}.

Show that the mass of water in the cup is approximately 0.3 kg.

[2]

STEMUP.CO.UK

11 Fig. 19 shows a crane lifting a car of mass 850 kg at constant velocity through a height of 12 m in a time of 40 s. The crane has a working efficiency of 60 %.

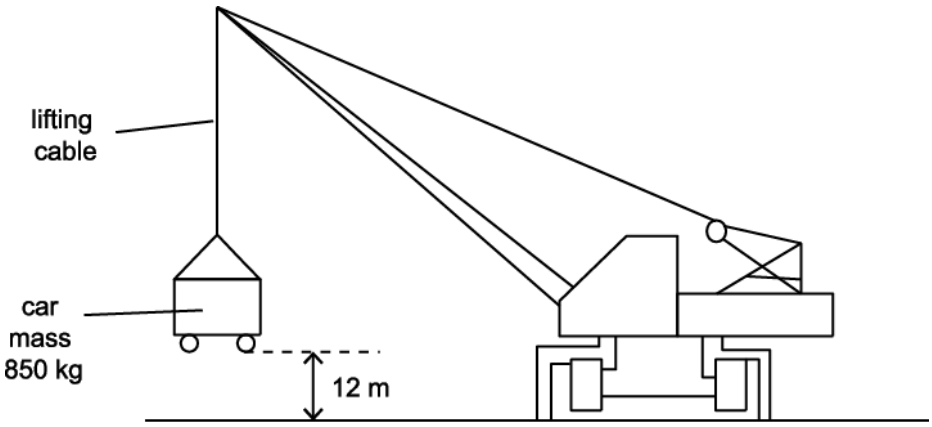

Fig. 19

(i) Calculate the tension in the lifting cable.

tension = _____ N **[1]**

(ii) Calculate the total input power required by the crane to lift the car.

total input power = _____ W **[4]**

(iii) Suggest and explain **two** ways the crane can be modified to improve its efficiency.

_____

_____

_____

STEMUP.CO.UK

[2]

STEMUP.CO.UK

12(a) A cyclist moves along a horizontal road. She pushes on the pedals with a constant power of 250 W. The mass of the cyclist and bicycle is 85 kg. The total drag force is $0.4v^2$, where v is the speed of the cyclist.

(i) Calculate the energy provided by the cyclist each minute when the overall efficiency of the cyclist's muscles is 65%.

energy = _____ J **[2]**

(ii) Calculate the drag force and hence the instantaneous acceleration of the cyclist when the speed is 6.0 ms^{-1}.

acceleration = _____ ms^{-2} **[3]**

© OCR 2022. You may photocopy this page.

Created in ExamBuilder

STEMUP.CO.UK

(b) A cyclist moves along a horizontal road. She pushes on the pedals with a constant power of 250 W. The mass of the cyclist and bicycle is 85 kg. The total drag force is $0.4v^2$, where v is the speed of the cyclist.

The cyclist now moves up a slope at a constant speed of 6.0 ms^{-1} and continues to exert a power of 250 W on the pedals.

Fig. 17.1 represents the cyclist and bicycle as a single point **P** on the slope.

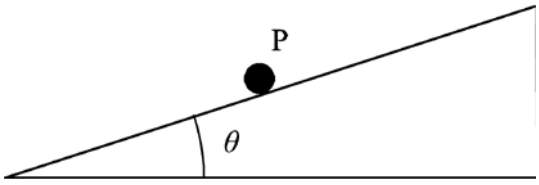

Fig. 17.1

(i) Draw arrows on **Fig. 17.1** to represent the forces acting on **P**. Label each arrow with the force it represents.

[1]

(ii) Calculate the angle θ of the slope to the horizontal.

θ = _____ ° **[2]**

STEMUP.CO.UK

(c) The cyclist continues to move up the slope at 6.0 ms^{-1} and approaches a gap of width 2.5 m as shown in **Fig. 17.2**.

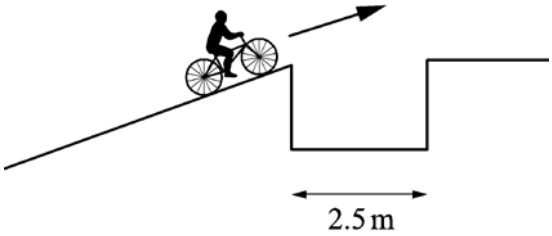

Fig. 17.2

A student has calculated that the cyclist will be able to clear the gap and land on the other side. Another student suggests that this calculation has assumed there is **no** drag and has not accounted for the effect caused by the front wheel losing contact with the slope before the rear wheel.

Without calculation, discuss how drag and the front wheel losing contact with the slope will affect the motion and explain how these might affect the size of the gap that can be crossed successfully.

---

[4]

STEMUP.CO.UK

13 **Fig. 21.1** shows two identical negatively charged conducting spheres.

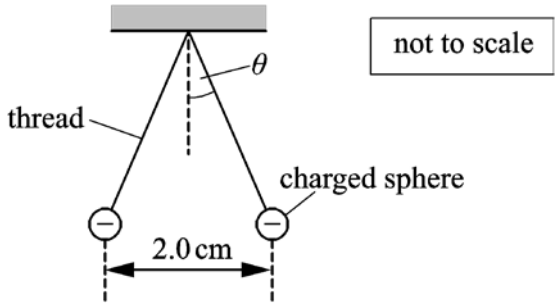

Fig. 21.1

The spheres are tiny and each is suspended from a nylon thread. Each sphere has mass 6.0×10^{-5} kg and charge -4.0×10^{-9} C. The separation between the centres of the spheres is 2.0 cm.

(i) Explain why the spheres are separated as shown in **Fig. 21.1**.

_____

_____

_____ **[2]**

(ii) Calculate the angle θ made by each thread with the vertical.

θ = _____ ° **[4]**

STEMUP.CO.UK

14 This question is about the operation of an electrically powered shower designed by an electrical firm.

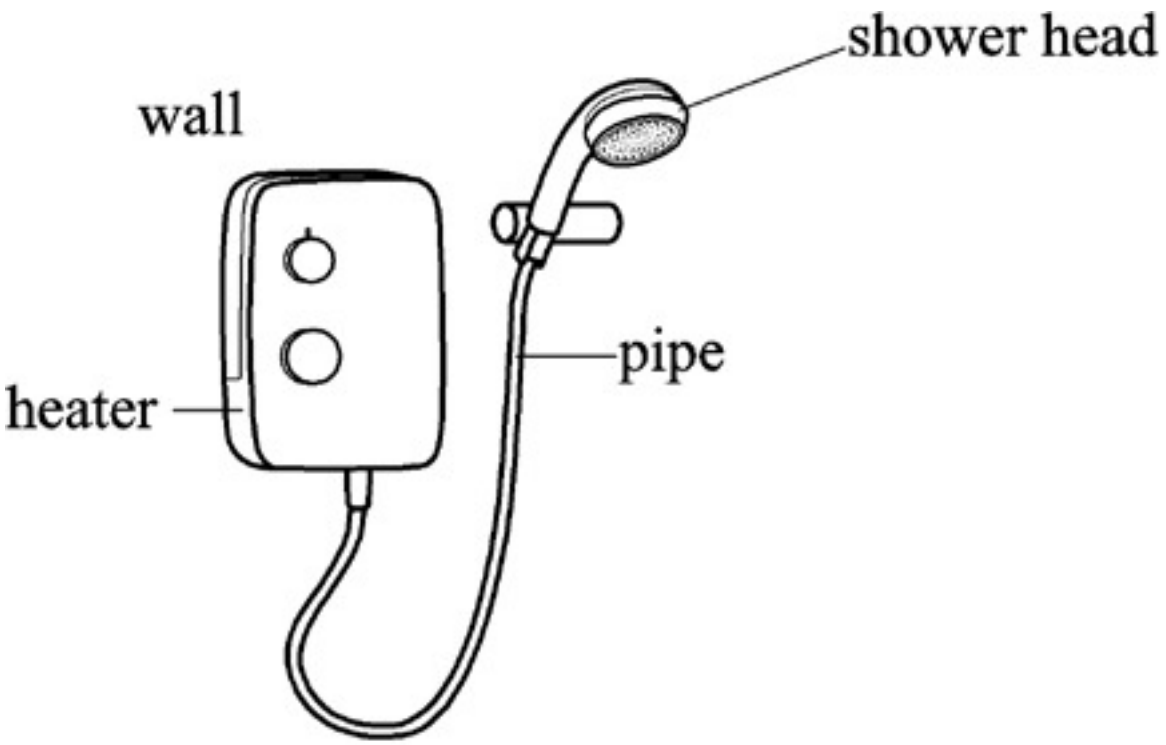

Fig.1.1

Water moves at constant speed through a pipe of cross-sectional area $7.5 \times 10^{?5}\ \mathrm{m}^2$ to a shower head shown in **Fig. 1.1.** The maximum mass of water which flows per second is 0.070 kg s^{-1}.

(i) Show that the maximum speed of the water in the pipe is about 0.9 m s^{-1}.

density of water = 1000 kg m^{-3}

[2]

(ii) The total cross-sectional area of the holes in the shower head is one quarter that of the pipe. Calculate the maximum speed of the water as it leaves the shower head.

© OCR 2022. You may photocopy this page.

Created in ExamBuilder

STEMUP.CO.UK

maximum speed = _____ m s^{-1} **[1]**

(iii) Calculate the magnitude of the force caused by the accelerating water on the shower head.

force = _____ N **[2]**

(iv) Draw on to **Fig. 1.1** the direction of the force in **(iii)**.

[1]

15 Civil engineers are designing a floating platform to be used at sea. **Fig. 4.1** shows a model for one section of this platform, a sealed metal tube of uniform cross-sectional area, loaded with small pieces of lead, floating upright in equilibrium in water.

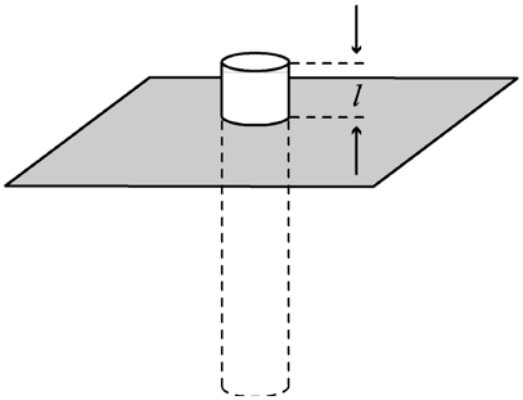

Fig. 4.1

The tube has length 300 mm and diameter 50 mm. The total mass of the lead and tube is 0.50 kg. Show that the length *l* of tube above the surface is more than 40 mm.

density of water = 1000 kg m^{-3}

[3]

STEMUP.CO.UK

16(a) When riding at a steady speed on the flat, a cyclist provides a constant power of 200 W to the rear wheel of his bicycle. The total mass of bicycle and rider is 120 kg.

The total resistive forces *R* acting against the motion of the bicycle and the rider vary with the velocity *v* of the bicycle as shown in Fig. 1.

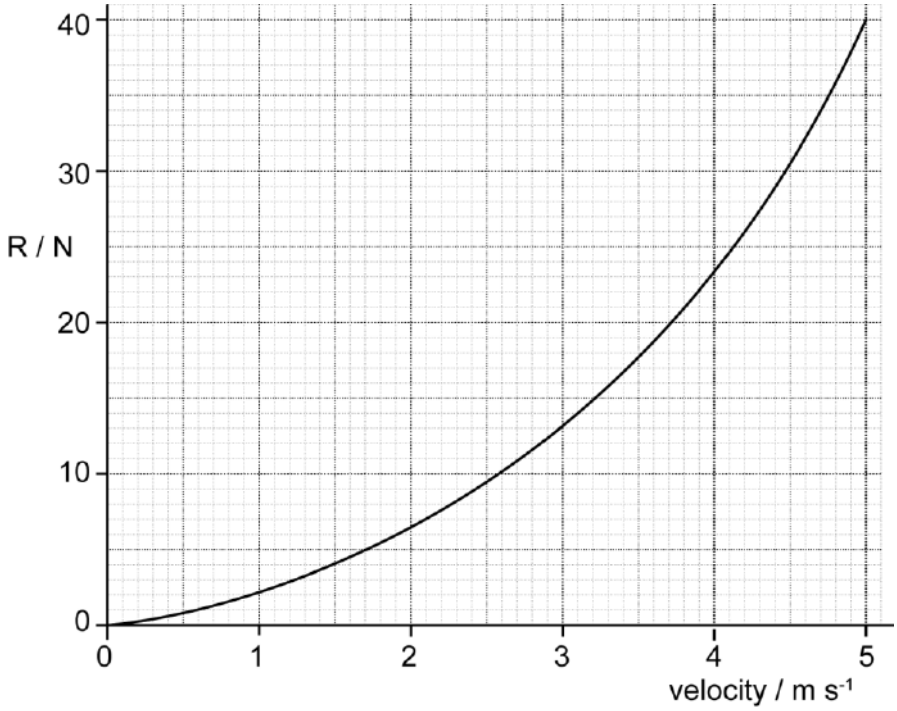

Fig.1

(i) The cyclist starts from rest. He pedals steadily along a horizontal road. This exerts a constant forward force of 40 N on the bicycle.

Use Fig. 1 to state and explain how the acceleration and velocity of the bicycle vary as the cyclist travels along the road.

---[3]

STEMUP.CO.UK

(ii) Calculate

1 the initial acceleration of the bicycle

acceleration = _____ m s^{-2} **[1]**

2 the maximum speed of the cyclist.

maximum speed = _____ m s^{-1} **[2]**

(b) The cyclist reaches a hill.

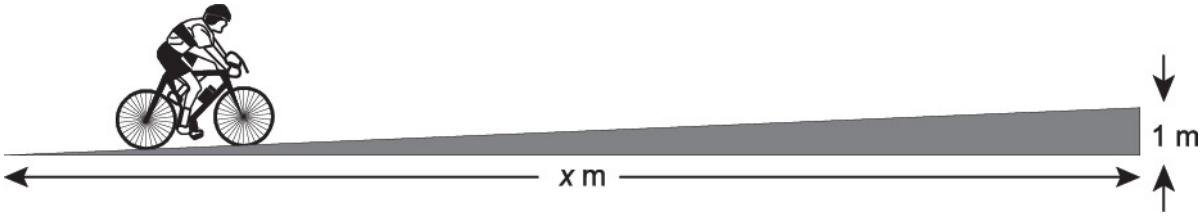

The cyclist has to double the power provided to the rear wheel to maintain the same maximum speed reached on the flat road.

Assume that the total resistive force is unchanged.

The gradient of the hill is 1 in *x*.

Calculate x.

x = _____ m **[3]**

STEMUP.CO.UK

17 Electrons in a beam are accelerated from rest by a potential difference V between two vertical plates before entering a uniform electric field of electric field strength E between two horizontal parallel plates, a distance $2d$ apart.

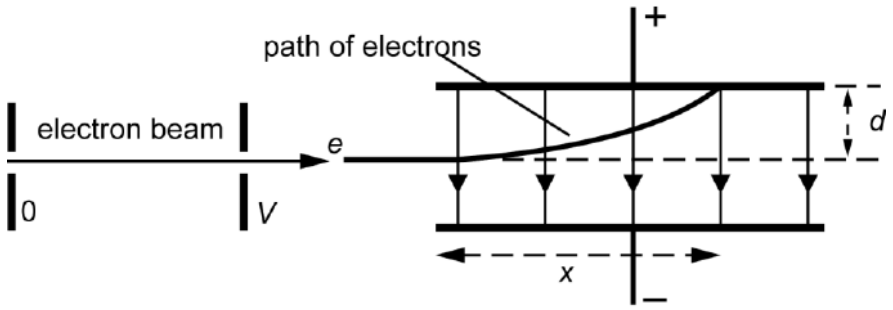

Fig. 2.1

The path of the electrons is shown in Fig. 2.1. The electron beam travels a horizontal distance x parallel to the plates before hitting the top plate. The beam has been deflected through a vertical distance d.

Show that x is related to V by the equation

$$x^2 = \frac{4\,d\,V.}{E}$$

[5]

STEMUP.CO.UK

18(a) A meteorological balloon rises through the atmosphere until it expands to a volume of $1.0 \times 10^6\ m^3$, where the pressure is $1.0 \times 10^3\ Pa$. The temperature also falls from 17 °C to – 43 °C.

The pressure of the atmosphere at the Earth's surface = 1.0×10^5 Pa.

Show that the volume of the balloon at take off is about $1.3 \times 10^4\ m^3$.

[3]

(b) The balloon is filled with helium gas of molar mass $4.0 \times 10^{?3}\ kg\ mol^{?1}$ at 17 °C at a pressure of $1.0 \times 10^5\ Pa$.

Calculate

(i) the number of moles of gas in the balloon

number of moles = _____ **[2]**

(ii) the mass of gas in the balloon.

mass = _____ kg **[1]**

STEMUP.CO.UK

(c) The internal energy of the helium gas is equal to the random kinetic energy of all of its molecules.

When the balloon is filled at ground level at a temperature of 17 °C, the internal energy is 1900 MJ.

Estimate the internal energy of the helium when the balloon has risen to a height where the temperature is –43 °C.

internal energy = _____ MJ **[1]**

(d) The acceleration of the balloon and its instruments at the Earth's surface as it is released is 27 m s^{-2}.

The density of the air at the Earth's surface is 1.3 kg m^{-3}.

Calculate the total mass *M* of the helium-filled balloon and its load.

M = _____ kg **[3]**

STEMUP.CO.UK

19 A canal boat is pulled by a single rope.

The tension in the rope is 220 N. The rope makes an angle of 30° to the direction of travel.

The speed of the boat is 1.8 m s^{-1}.

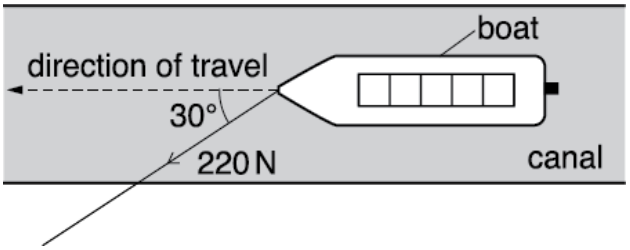

What is the work done per second by the 220 N force in the direction of travel?

A 61 J s^{-1}

B 200 J s^{-1}

C 340 J s^{-1}

D 400 J s^{-1}

Your answer

[1]

STEMUP.CO.UK

20 A ball of mass m is dropped into water. A constant upthrust U acts on the ball as it travels down through the water. The acceleration of the ball is a when the drag is D.

The acceleration of free fall is g.

What is the correct expression for the acceleration a?

A
$$a = g - \frac{U+D}{m}$$

B
$$a = g - \frac{U-D}{m}$$

C
$$a = g - \frac{D-U}{m}$$

D
$$a = g + \frac{U+D}{m}$$

Your answer ☐

[1]

21 A cylinder of wood is placed in water.
The density of the wood is 6.0×10^2 kg m^{-3}. The density of water is 1.0×10^3 kg m^{-3}.

What fraction of the volume of the cylinder is **below** the water line?

A 0.2
B 0.4
C 0.6
D 1.0

Your answer ☐

[1]

STEMUP.CO.UK

22 A satellite is in a circular orbit around the Earth. The vertical **height** of the satellite above the surface of the Earth is 3200 km. The radius of the Earth is 6400 km.

What is the ratio

$$\frac{\text{weight of satellite in orbit}}{\text{weight of satellite on the Earth's surface}}?$$

A 0.25
B 0.44
C 0.50
D 0.67

Your answer

[1]

STEMUP.CO.UK

23(a) State the *principle of moments*.

---[1]

(b) A cylinder head gasket is a thin sheet of material used in a car engine.

A car manufacturer wants to locate the centre of gravity of the gasket shown in Fig. 18.1.

Fig. 18.1

Describe how the centre of gravity of the gasket can be determined using equipment from a laboratory.

---[4]

STEMUP.CO.UK

(c) Fig. 18.2 shows an arrangement for lifting a car engine in a repair workshop.

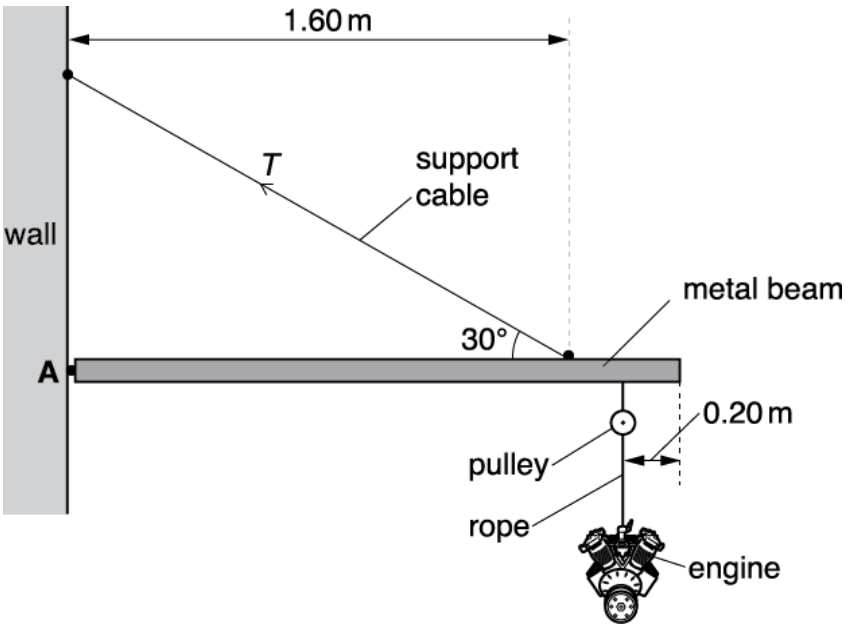

Fig. 18.2 (not to scale)

A **uniform** metal beam of length 2.00 m is hinged to a vertical wall at point **A**. The beam is held at rest in a horizontal position by a support cable of diameter of 3.0 cm. One end of this cable is fixed to the wall and the other end is fixed to the beam at a perpendicular distance of 1.60 m from the wall. The support cable makes an angle of 30° to the horizontal.

The car engine is lifted and lowered using a rope and a pulley. The pulley is fixed to the lower end of the beam at a distance of 0.20 m from the far end of the beam.

The metal beam has a mass of 120 kg and the car engine has a mass of 95 kg.

(i) Calculate the tension T in the support cable.

T = _____ N **[3]**

(ii) Calculate the tensile stress σ in the support cable in kPa.

STEMUP.CO.UK

σ = _____ kPa **[2]**

(iii) The engine is lowered using the pulley and the rope. The engine accelerates downwards.
Explain briefly the effect this would have on the tension *T* in the support cable.

_____

_____ **[1]**

STEMUP.CO.UK

24 Fig. 21.2 shows the displacement x against time t graph of an oscillator damped in air.

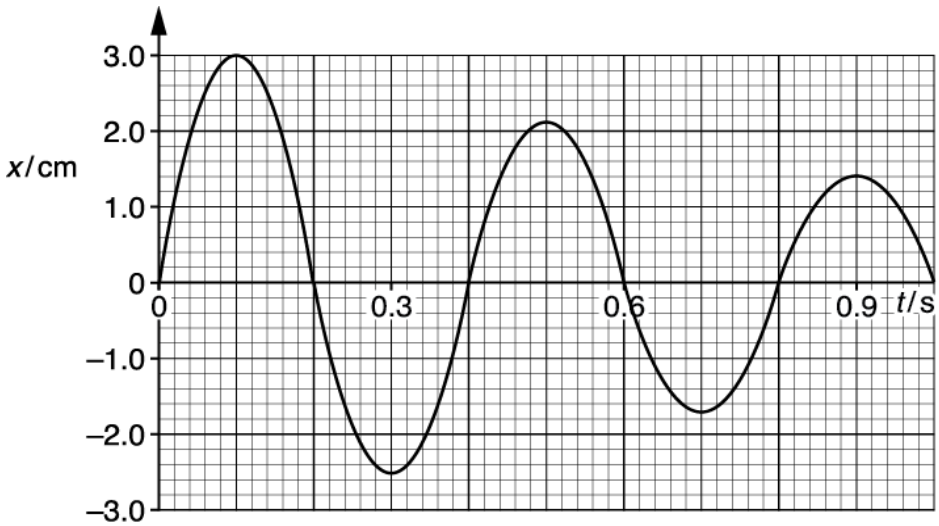

Fig. 21.2

(i) According to a student, the amplitude of the oscillator decays by the same fraction every half oscillation. Analyse Fig. 21.2 to assess whether or not the student is correct.

---

[2]

(ii) State and explain at which time the oscillator dissipates **maximum** energy.

---

[2]

STEMUP.CO.UK

STEMUP.CO.UK

25 A group of students have gathered data on four stars from the Internet. The information is shown in the table below.

Star	T / K	λ_{max} /μm
Antares	3.1×10^{3}	9.4×10^{-1}
Zeta	3.0×10^{4}	9.7×10^{-2}
Vega	9.3×10^{3}	3.1×10^{-1}
OTS-44	2.3×10^{3}	1.3×10^{0}

The surface temperature of the star in kelvin is T and λ_{max} is the wavelength of the emitted electromagnetic radiation at which the intensity is maximum.

A sensor of cross-sectional area 4.0×10^{-4} m^2 mounted on a satellite orbiting the Earth is used to gather the electromagnetic radiation from the star Antares.
Antares is 550 light years from the Earth. The radiant power entering the sensor from Antares is 2.6×10^{-11} W.

(i) Calculate the luminosity L of Antares.

L = _____ W **[3]**

(ii) Use your answer in **(i)** and the data in the table to calculate the radius r of Antares.

STEMUP.CO.UK

r = _____ m **[2]**

(iii) The mean density of Antares is 4.4×10^{-5} kg m^{-3}.

Calculate the gravitational field strength g at the surface of Antares.

g = _____ N kg^{-1} **[2]**

STEMUP.CO.UK

26 A **proton** travels from point **P** to point **Q** in a uniform electric field as shown in Fig. 21.2.

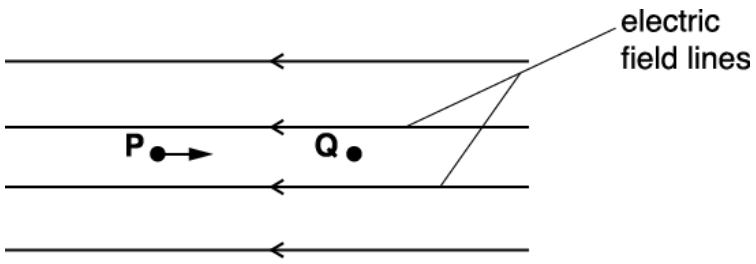

Fig. 21.2

The velocity of the proton at **P** is 7.2×10^6 m s^{-1} and the velocity at **Q** is 2.4×10^6 m s^{-1}. The distance between **P** and **Q** is 1.2 cm.

Calculate

(i) the magnitude of the deceleration of the proton

deceleration = _____ m s^{-2} **[2]**

(ii) the electric field strength *E*.

E = _____ N C^{-1} **[2]**

STEMUP.CO.UK

27 This question is about helium in the atmosphere of the Earth.

Experiment shows that most of the Earth's atmosphere is contained within a very thin shell around the surface of the Earth. Less than 0.0001% of this is helium.

Assume that the Earth's atmosphere has a constant density ρ of 1 .3 kg m^{-3}. The atmospheric pressure at sea level is 1.0×10^5 Pa.

Show that the depth of the atmosphere under these conditions would be about 8 km.

[2]

28 The flat end of a uniform steel cylinder of weight 7.8 N is glued to a horizontal ceiling. The cylinder hangs vertically. The breaking stress for the glue is 130 kPa.

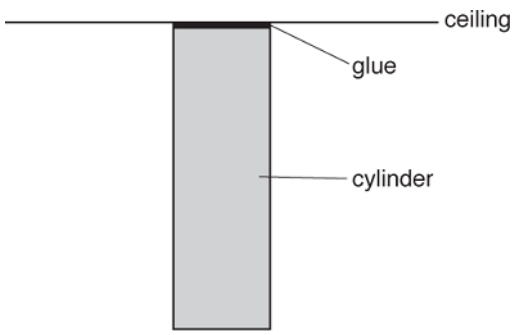

The glue only just holds the cylinder to the ceiling.

What is the cross-sectional area of the cylinder?

A 6.0×10^{-2} m^2

B 6.0×10^{-5} m^2

C 1.7×10^{-2} m^2

D 1.7×10^{1} m^2

Your answer ☐ **[1]**

© OCR 2022. You may photocopy this page.

Created in ExamBuilder

STEMUP.CO.UK

29 The diagram shows two opposite vertical forces of magnitude 1.2 N and 2.1 N acting on an object.

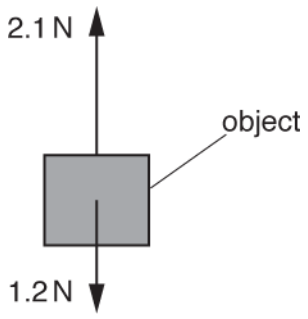

Which of the following statements could be correct?

1 The object is accelerating and moving up.

2 The object is decelerating and moving down.

3 The magnitude of the resultant force is 0.9 N.

A Only 3

B Only 1 and 3

C Only 2 and 3

D 1, 2 and 3

Your answer ☐ **[1]**

STEMUP.CO.UK

30(a) A group of students are conducting an experiment in the laboratory to determine the value of absolute zero by heating a fixed mass of gas. The volume of the gas is kept constant.

Fig. 17.1 shows the arrangement used by the students.

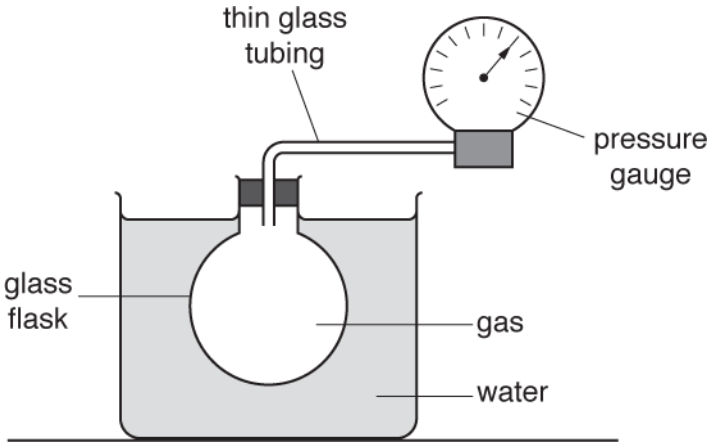

Fig. 17.1

The gas is heated using a water bath. The temperature θ of the water is increased from 5 °C to 70 °C.
The temperature of the water bath is assumed to be the same as the temperature of the gas. The pressure p of the gas is measured using a pressure gauge.

The results from the students are shown in a table.

θ / °C	p / kPa
5 ± 1	224 ± 3
13 ± 1	231 ± 3
22 ± 1	238 ± 3
35 ± 1	248 ± 3
44 ± 1	
53 ± 1	262 ± 3
62 ± 1	269 ± 3
70 ± 1	276 ± 3

© OCR 2022. You may photocopy this page.

Created in ExamBuilder

STEMUP.CO.UK

Describe and explain how the students may have made accurate measurements of the temperature θ.

---[2]

(b) Fig. 17.2 shows the pressure gauge. Measurements of p can be made using the kPa scale or the psi (pounds per square inch) scale. The students used the psi scale to measure pressure and then converted the reading to pressure in kPa.

Fig. 17.2

(i) Suggest why it was sensible to use the psi scale to measure p.

---[1]

STEMUP.CO.UK

(ii) The students made a reading of p of 37.0 ± 0.5 psi when θ was 44 ± 1°C.

Convert this value of p from psi to kPa. Complete the table for the missing value of p. Include the absolute uncertainty in p.

1 pound of force = 4.448 N

1 inch = 0.0254 m

[2]

STEMUP.CO.UK

(c) Fig. 17.3 shows the graph of p against θ.

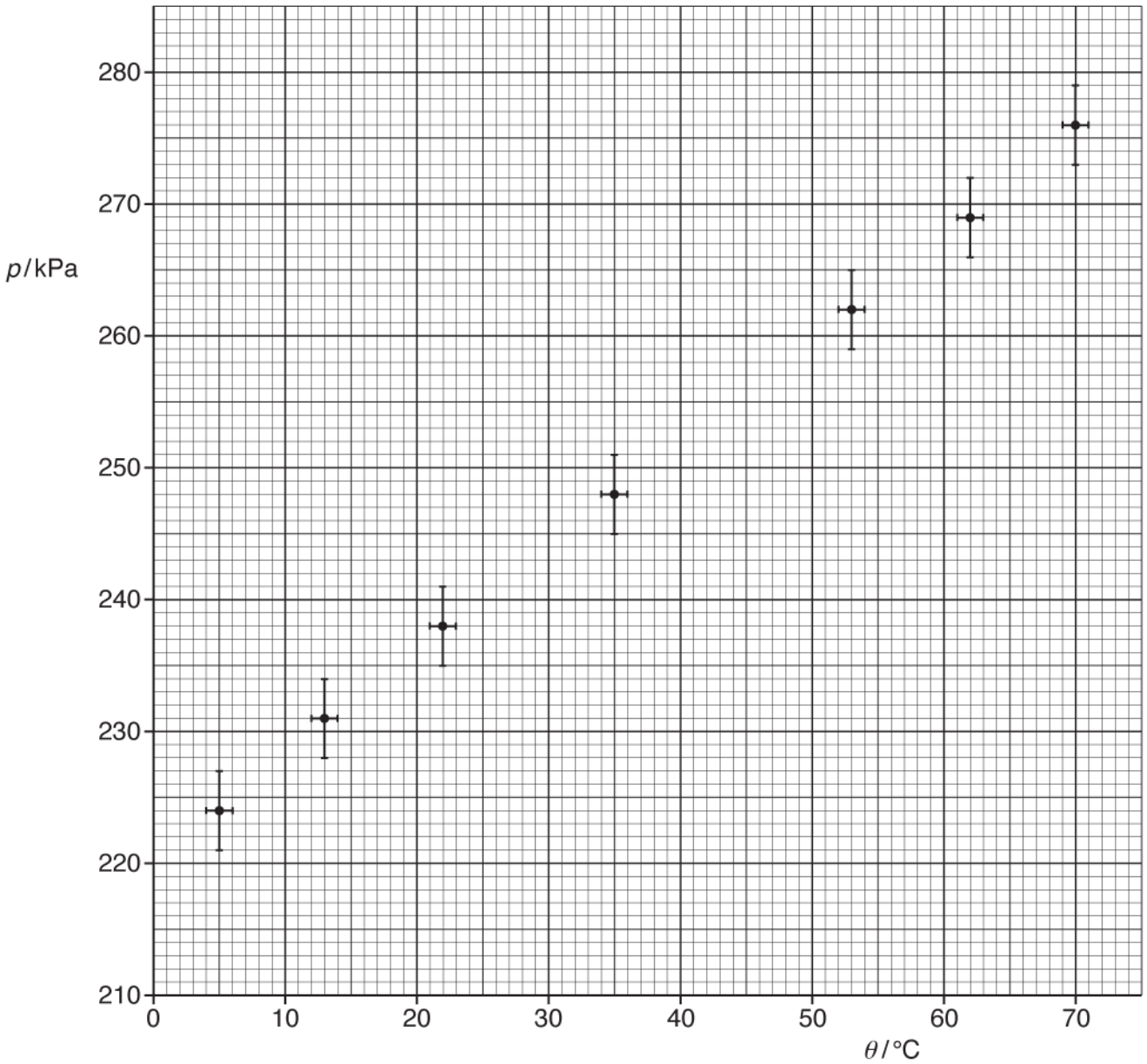

Fig. 17.3

(i) Plot the missing data point and the error bars on Fig. 17.3.

[1]

STEMUP.CO.UK

(ii) Explain what is meant by *absolute zero*. Describe how Fig. 17.3 can be used to determine the value of absolute zero.

Determine the value of absolute zero. You may assume that the gas behaves as an ideal gas.

STEMUP.CO.UK

[6]

(d) Describe, without doing any calculations, how you could use Fig. 17.3 to determine the actual uncertainty in the value of absolute zero in **(c)(ii)**.

[2]

STEMUP.CO.UK

(e) The experiment is repeated as the water bath quickly cools from 70 °C to 5 °C. Absolute zero was found to be −390°C.

Compare this value with your value from **(c)(ii)** and explain why the values may differ. Describe an experimental approach that could be taken to avoid systematic error in the determination of absolute zero.

[4]

STEMUP.CO.UK

31(a) This question is about the motion of a ball suspended by an elastic string above a bench. The mass of the string is negligible compared to that of the ball. Ignore air resistance.

Fig. 6.1

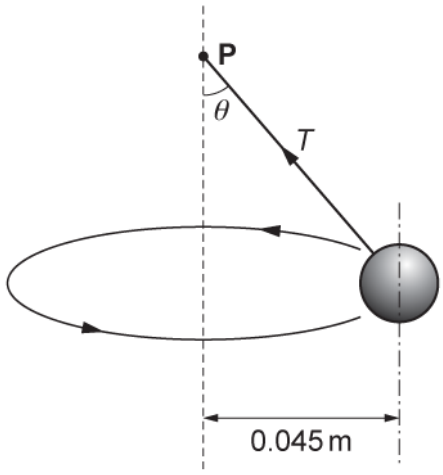

Fig. 6.2 (not to scale)

In Fig. 6.1 the ball of weight 1.2 N hangs vertically at rest from a point **P**. The extension of the string is 0.050 m. The string obeys Hooke's law.

In Fig. 6.2 the ball is moving in a horizontal circle of radius 0.045 m around a vertical axis through **P** with a period of 0.67 s. The string is at an angle θ to the vertical. The tension in the string is T.

On Fig. 6.2 draw and label one other force acting on the ball. **[1]**

STEMUP.CO.UK

(b)

(i) Resolve the tension T horizontally and vertically and show that the angle θ is 22°.

[2]

(ii) Calculate the extension x of the string shown in Fig. 6.2.

x = _____ m **[3]**

STEMUP.CO.UK

(c) Whilst rotating in the horizontal plane the ball suddenly becomes detached from the string. The bottom of the ball is 0.18 m above the bench at this instant. The ball falls as a projectile towards the bench beneath. Fig. 6.3 shows the view from above.

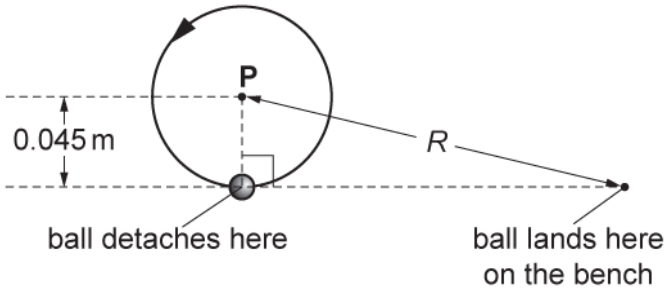

Fig. 6.3

Calculate the horizontal distance *R* from the point on the bench vertically below the point **P** to the point where the ball lands on the bench.

R = _____ m **[4]**

STEMUP.CO.UK

(d) Returning to the situation shown in Fig. 6.2, state and explain what happens when the rate of rotation of the ball is increased.

---[2]

STEMUP.CO.UK

32(a) A swimming pool designer investigates the depth *d* below a water surface reached by a diver when diving from a height *h* above the water surface.

The designer models the diver as a uniform wooden cylinder.

The experimental arrangement is shown in Fig. 18.1.

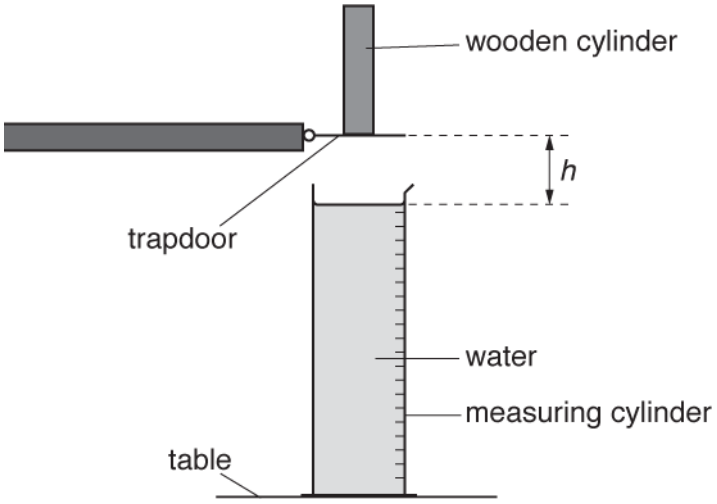

Fig. 18.1

The wooden cylinder has mass 5.0×10^{-3} kg, diameter 1.0×10^{-2} m and length 7.0×10^{-2} m.

(i) Calculate the density of the wood.

density = _____ kg m^{-3} **[2]**

STEMUP.CO.UK

(i) Suggest why wood is an appropriate material to model the depth reached by a diver.

---[2]

STEMUP.CO.UK

(b) Fig. 18.2 shows the cylinder fully submerged under the water surface before it has come to rest. The cylinder is moving vertically **down**.

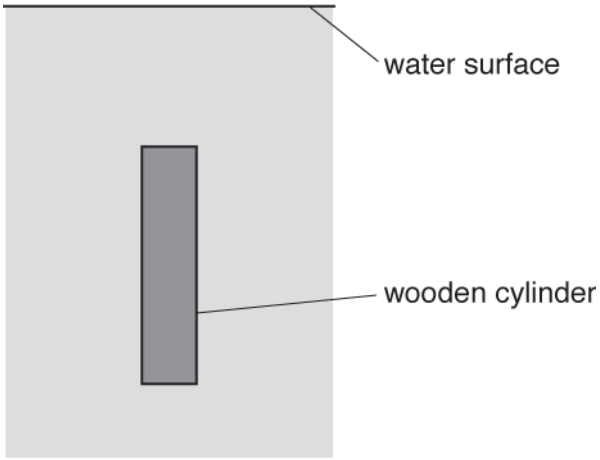

Fig. 18.2

(i) Add arrows to Fig. 18.2 to show the **three** forces acting on the wooden cylinder. Label the arrows.

[3]

(ii) Describe and explain how the **resultant** force on the wooden cylinder varies from the moment the cylinder is fully submerged until it reaches its deepest point.

---[3]

STEMUP.CO.UK

(c) The graph of Fig. 18.3 shows the depth *d* reached for different initial drop height *h*.

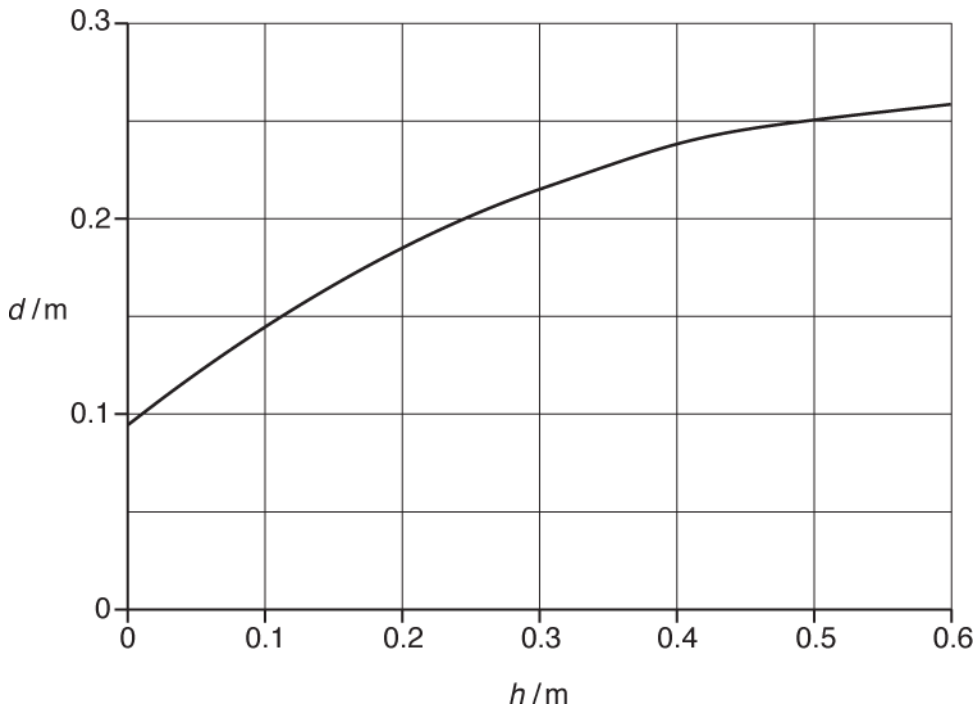

Fig. 18.3

The designer is required to double the height of a diving board for an existing swimming pool. He suggests that the depth of the pool also needs to be doubled.

Use Fig. 18.3 to explain whether you agree with this suggestion.

---

[3]

STEMUP.CO.UK

33 The centre of a rod is fixed to a pulley. Two 50 N forces are applied to the ends of the rod as shown. The tension in the rope attached to the pulley is T. The system is in equilibrium.

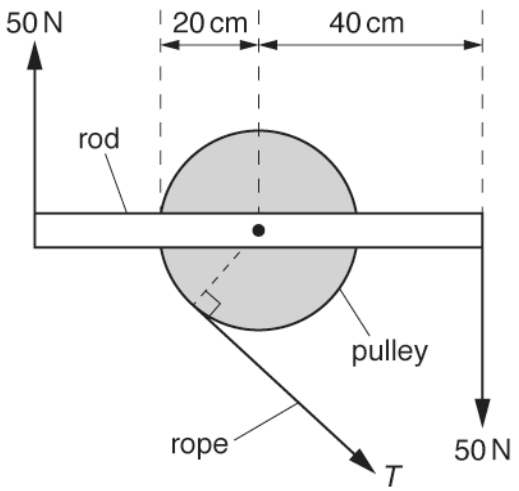

Not to scale

What is the moment of the tension T about the centre of the pulley?

A 10 N m
B 20 N m
C 30 N m
D 40 N m

Your answer [1]

STEMUP.CO.UK

34 A trolley of mass M is pulled along a horizontal table by a force W provided by a mass hanging from the end of a string as shown.

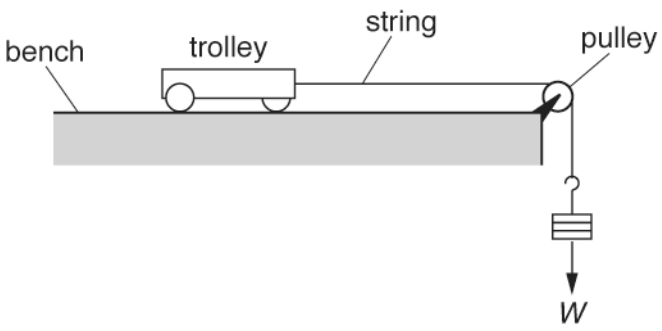

Frictional forces are negligible. The acceleration of free fall is g.

What is the correct equation for the acceleration a of the trolley?

A $a = \frac{W}{M}$

B $a = g$

C $a = \frac{W}{2M}$

D $a = \frac{W}{M + \frac{W}{g}}$

Your answer [1]

STEMUP.CO.UK

35 An object is dropped from rest at time $t = 0$. It falls vertically through the air.
The variation of the velocity v with time t is shown below.

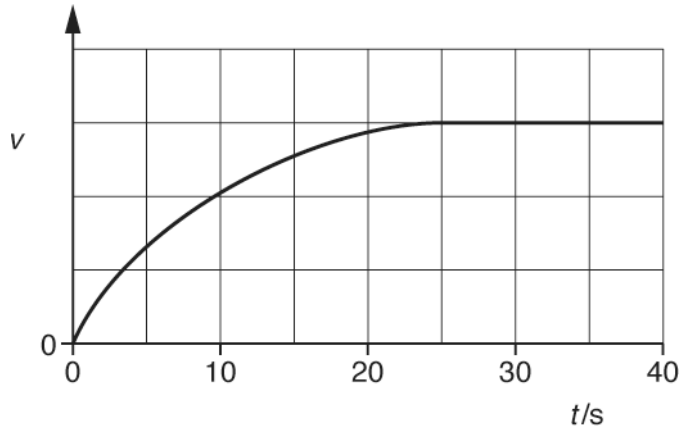

Which statement is correct about this object?

A It has constant acceleration.
B It experiences zero drag at $t = 30$ s.
C It has an acceleration of 9.81 m s^{-2} at $t = 0$ s.
D It travels the same distance in every successive 10 s.

Your answer [1]

STEMUP.CO.UK

36 Fig. 21 shows the drum of a washing machine.

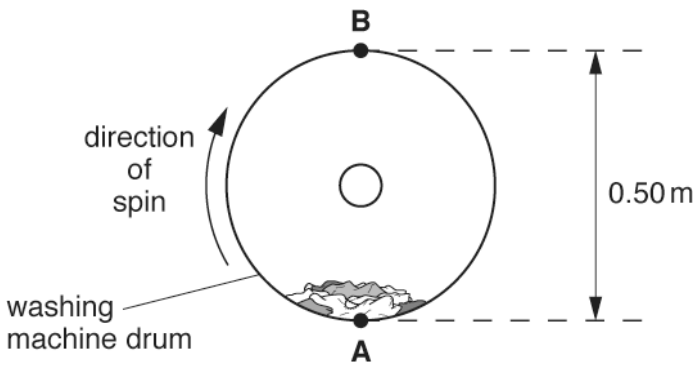

Fig. 21

The clothes inside the drum are spun in a **vertical** circular motion in a clockwise direction.

The washing machine is switched off and the speed of the drum slowly decreases. The clothes at the top of the drum at point **B** start to drop off at a certain speed *v*.

At this speed *v*, the normal contact force on the clothes is zero.

Calculate the speed *v*.

V = _____ ms^{-1} **[3]**

STEMUP.CO.UK

37 A binary star is a pair of stars which move in circular orbits around their common centre of mass.

In this question consider the stars to be point masses situated at their centres.

Fig. 3.1 shows a binary star where the mass of each star is *m*. The stars move in the same circular orbit.

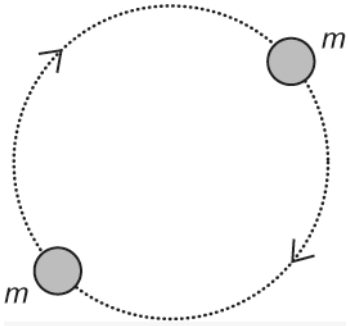

Fig. 3.1

(i) Explain why the stars of equal mass must always be diametrically opposite as they travel in the circular orbit.

---[2]

STEMUP.CO.UK

(ii) The centres of the two stars are separated by a distance of $2R$ equal to 3.6×10^{10} m, where R is the radius of the orbit. The stars have an orbital period T of 20.5 days. The mass of each star is given by the equation

$$m = \frac{16\pi^2 R^3}{GT^2}$$

where G is the gravitational constant.

Calculate the mass m of each star in terms of the mass $M_\odot$ of the Sun.

1 day = 86400 s
$M_\odot = 2.0 \times 10^{30}$ kg

m = ---------- $M_\odot$ **[3]**

(iii) The stars are viewed from Earth in the plane of rotation.
The stars are observed using light that has wavelength of 656 nm in the laboratory. The observed light from the stars is Doppler shifted.

Calculate the maximum change in the observed wavelength $\Delta\lambda$ of this light from the orbiting stars. Give your answer in nm.

$\Delta\lambda$ = ---------- nm **[2]**

STEMUP.CO.UK

38(a) A toy rocket is made from a 1.5 litre plastic bottle with fins attached for stability.

The bottle initially contains 0.30 litres of water, leaving 1.2 litres of trapped air at a temperature of 17 °C.
A pump is used to increase the pressure of the air within the plastic bottle to 2.4×10^5 Pa at the start of lift-off.

Fig. 1.1 shows the rocket at the start of lift-off.

1 litre = 10^{-3} m^3

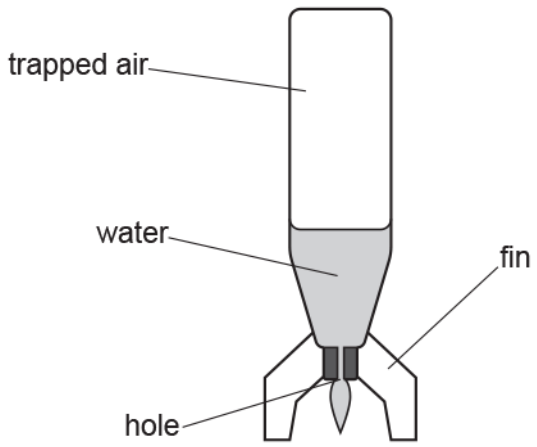

Fig. 2.1

The trapped air pushes the water downwards out of the hole, causing the rocket to rise.
The temperature of this air remains constant.

Calculate the final pressure of the trapped air just before all the water has been released.

final pressure = ...Pa **[3]**

STEMUP.CO.UK

(b) Here is some data on the toy rocket.

mass of empty bottle and fins = 0.050 kg
area of cross-section of hole = 1.1×10^{-4} m^2
initial pressure of trapped air = 2.4×10^5 Pa
atmospheric pressure = 1.0×10^5 Pa
density of water = 1.0×10^3 kg m^{-3}

(i) Use the data above to show that the **upwards** force on the rocket at the start of lift-off is about 15 N.

[2]

(ii) Hence calculate the initial vertical acceleration of the rocket.

initial acceleration = ... m s^{-2} **[3]**

STEMUP.CO.UK

(c) Discuss whether adding more water initially would enable the rocket to reach a greater height.

[3]

STEMUP.CO.UK

39 A paper cone is held above the ground and dropped. It falls vertically and reaches terminal velocity before it hits the ground.

Which statement correctly describes the **resultant** force on the falling cone before it reaches terminal velocity?

A decreasing and upwards

B decreasing and downwards

C increasing and downwards

D increasing and upwards

Your answer ☐ **[1]**

STEMUP.CO.UK

40(a) A student uses a motion-sensor connected to a laptop to investigate the motion of a hollow ball of mass 1.2×10^{-2} kg falling through air.

The ball is dropped from rest. It reaches terminal velocity before it reaches the ground.

The upthrust on the ball is negligible.

Fig. 17 shows the variation with time *t* of the velocity *v* of the ball as it falls towards the ground.

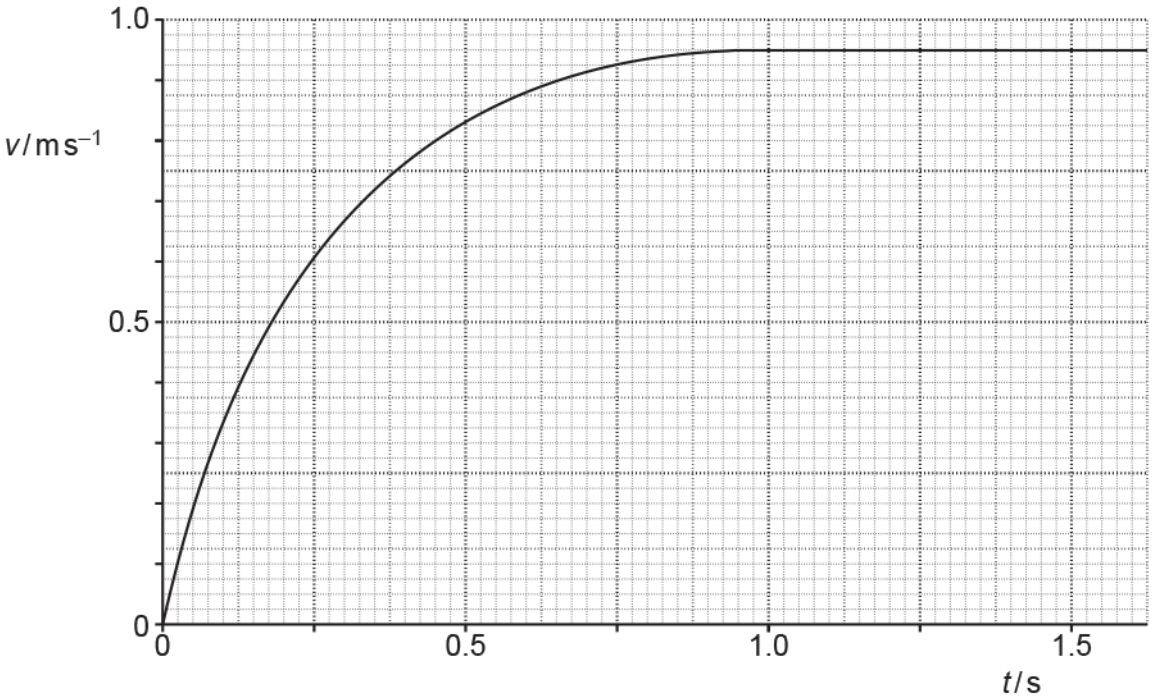

Fig. 17

Calculate the resultant force *F* acting on the ball at *t* = 0.25 s.

F = ... N **[1]**

STEMUP.CO.UK

(b) Use your answer in the part above to calculate the drag on the ball at time $t = 0.25$ s.

drag = ... N **[3]**

(c) The student now adds a small amount of sand inside the hollow ball.
As before, the ball is dropped from rest and it also reaches terminal velocity before it reaches the ground.

(i) Describe how the forces acting on the sand-filled ball at $v = 0.50$ m s^{-1} compare with the forces acting on the hollow ball at this speed.

---

[2]

(ii) Explain why the terminal velocity of the sand-filled ball will be greater than the terminal velocity of the hollow ball.

---

[2]

STEMUP.CO.UK

41(a) A screw is used to hang a wooden sign on a wall. It is screwed into the wall using a screwdriver.

The width of the screwdriver blade is 5.0×10^{-3} m from end to end.
The ends of the blade exert equal and opposite forces on the screw.
The magnitude of each force is 350 N, as shown in Fig. 22.1.

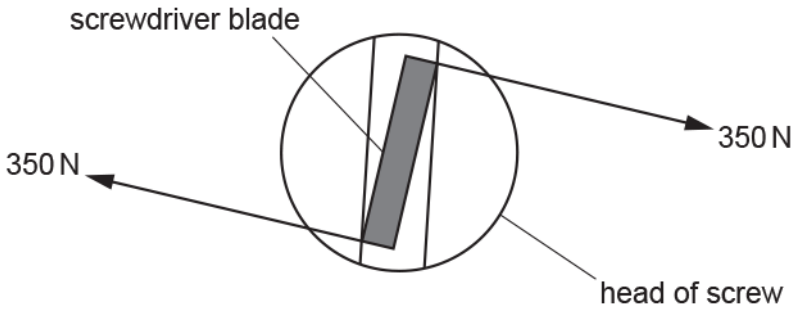

Fig. 22.1

Calculate the magnitude of the torque of the couple produced by the forces at each end of the screwdriver blade.

torque = ... N m **[1]**

(b) The wooden sign is then hung on the screw at point **A**.
The forces acting on the screw are shown in Fig. 22.2.

STEMUP.CO.UK

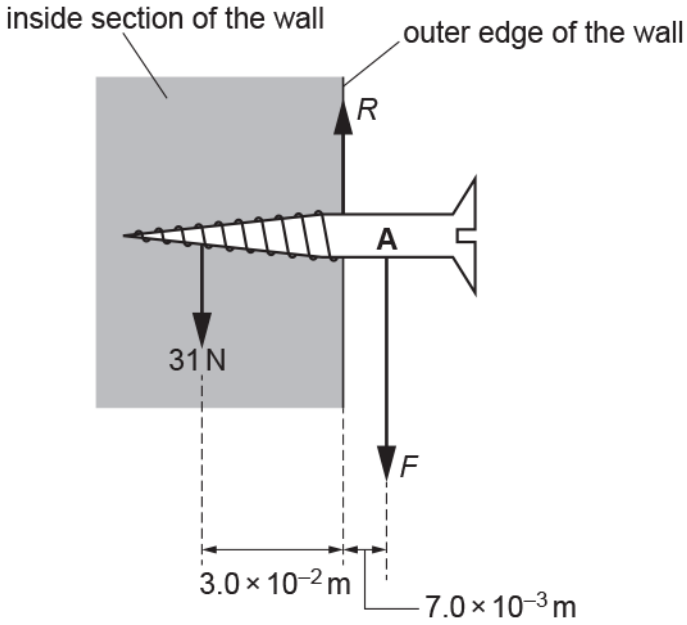

Fig. 22.2

The inside section of the wall exerts a maximum downwards force of 31 N at a distance of 3.0×10^{-2} m from the outer edge of the wall.

The hanging wooden sign exerts a force *F* at a distance 7.0×10^{-3} m from the outer edge of the wall.

There is a force R acting on the screw at the outer edge of the wall.

The mass of the screw is negligible.

Use the principle of moments to calculate the maximum mass of the wooden sign.

mass = ... kg **[3]**

STEMUP.CO.UK

42(a) A car is travelling at a constant speed of 20 m s^{-1} along a straight road.

The driver sees a hazard ahead in the road, applies the brakes and brings the car to a stop.

The graph below shows the displacement *s* against time *t* for the car from the time that the driver sees the hazard to when the car stops.

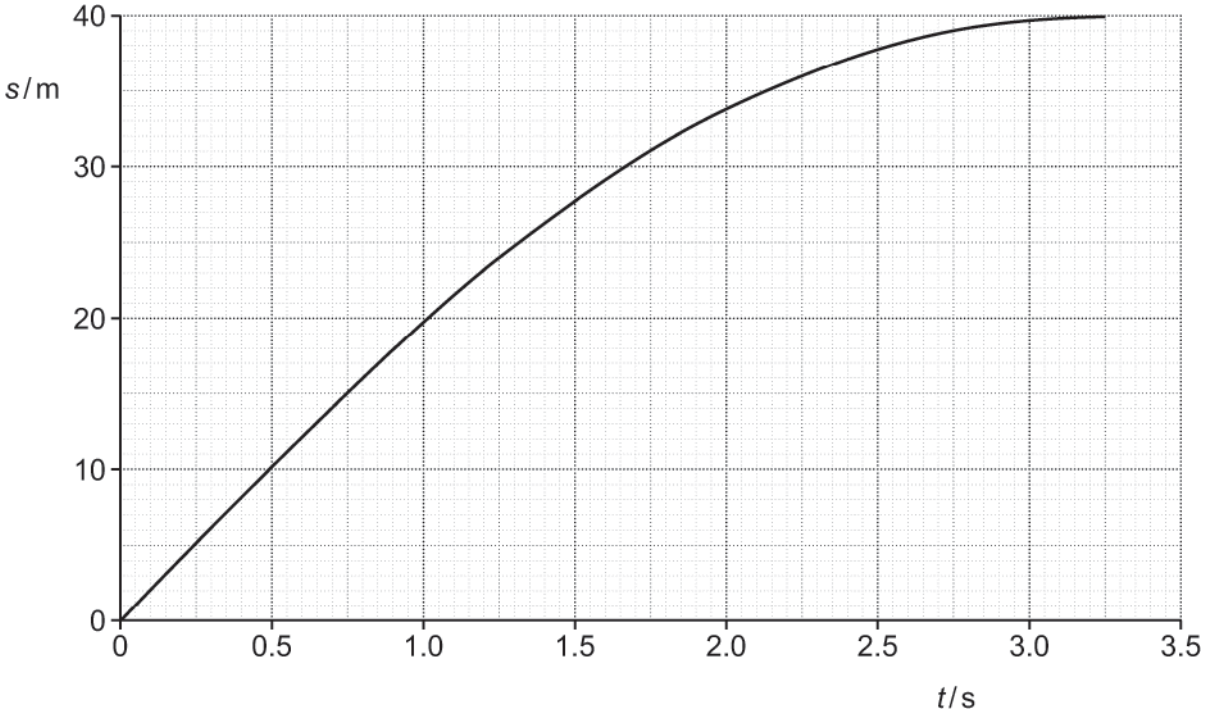

The braking force *F* acting on the car is constant.

The mass of the car is 950 kg.

The reaction time of the driver is 0.75 s.

Explain how you can deduce from the graph that the brakes are applied at time *t* = 0.75s.

[2]

STEMUP.CO.UK

(b) Determine the braking force *F*.
You should use information from the graph.

F = ... N **[3]**

(c) Describe and explain the variation of the displacement with time when the same driver applies the brakes in the same car when the initial speed of the car is 10 m s^{-1}.

---

[3]

---

43 Which pair of quantities have the same S.I. base units?

A force, strain
B force, stress
C pressure, stress
D strain, upthrust

Your answer ☐ **[1]**

STEMUP.CO.UK

44 A tennis ball is hit with a racket. The force applied by the racket on the ball is *F*. The ball has a vertical path through the air.

Which statement is correct when the ball is at its **maximum** height?

A The ball has a downward acceleration.
B The force acting on the ball is *F*.
C The ball experiences greatest drag.
D The weight of the ball is equal to the drag.

Your answer ☐ **[1]**

45 A wooden block is **stationary** on a ramp.

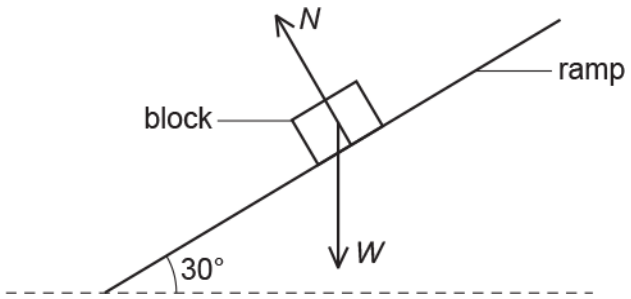

The diagram is **not** drawn to scale.

The block has weight *W*. The normal contact force on the block is *N*. The frictional force *F* on the block is not shown on the diagram.

Which triangle of forces diagram is correct?

A
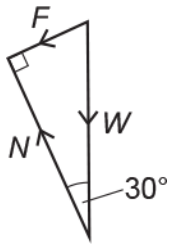

B
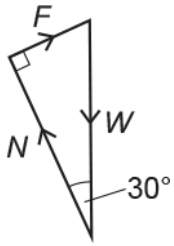

STEMUP.CO.UK

C

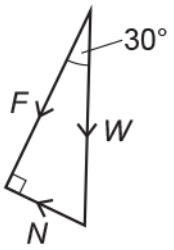

D

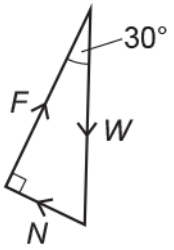

Your answer [1]

STEMUP.CO.UK

46(a) A truck pulls a car up a slope at a **constant** speed.

The truck and the car are joined with a steel tow bar, as shown in the diagram.

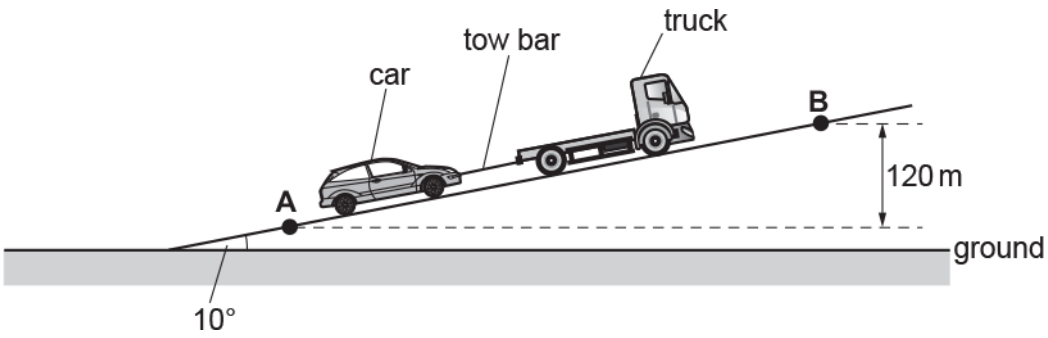

The diagram is **not** drawn to scale.

The slope is 10° to the horizontal ground.

The mass of the car is 1100 kg.

The car travels from **A** to **B** . The vertical distance between **A** and **B** is 120 m.

There are four forces acting on the **car** travelling up the slope.

Complete the free-body diagram below for the car and label the missing forces.

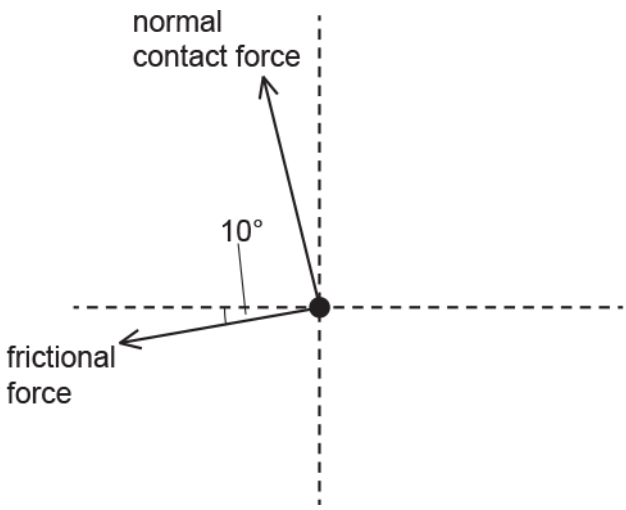

[2]

(b) Show that the component of the weight of the car *W*s acting down the slope is about 1900 N.

[1]

STEMUP.CO.UK

(c) The total frictional force acting on the car as it travels up the slope is 300 N.

Calculate the force provided by the tow bar on the car.

force = ... N **[1]**

(d) Calculate the work done by the force provided by the tow bar as the car travels from **A** to **B** .

work done = ... J **[3]**

(e) The steel tow bar used to pull the car has length 0.50 m and diameter 1.2×10^{-2} m.
The Young modulus of steel is 2.0×10^{11} Pa.
The force on the tow bar is 2200 N.

Calculate the extension x of the tow bar as the car travels up the slope.

x = ... m **[3]**

STEMUP.CO.UK

47 A long wooden cylinder is placed into a liquid and it floats as shown.

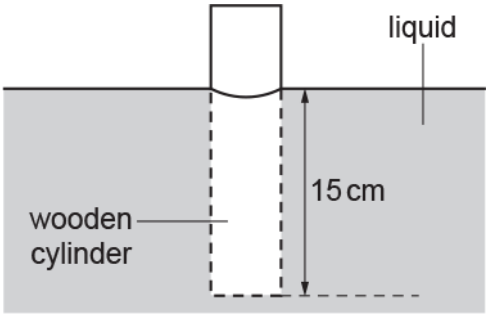

The length of the cylinder below the liquid level is 15 cm.

(i) State **Archimedes' principle** .

.....

.....

..... **[1]**

(ii) The pressure exerted by the liquid alone on the bottom of the cylinder is 1.9×10^3 Pa.

Calculate the density ρ of the liquid.

ρ = ... kg m^{-3} **[2]**

STEMUP.CO.UK

48(a) A ball coated with conducting paint has weight 0.030 N and radius 1.0 cm. The ball is suspended from an insulating thread. The distance between the pivot and the centre of the ball is 120 cm.

The ball is placed between two vertical metal plates. The separation between the plates is 8.0 cm. The plates are connected to a 4.0 kV power supply.

The ball receives a positive charge of 9.0 nC when it is made to touch the positive plate. It then repels from the positive plate and hangs in equilibrium at a displacement *x* from the vertical, as shown below. The diagram is **not** drawn to scale.

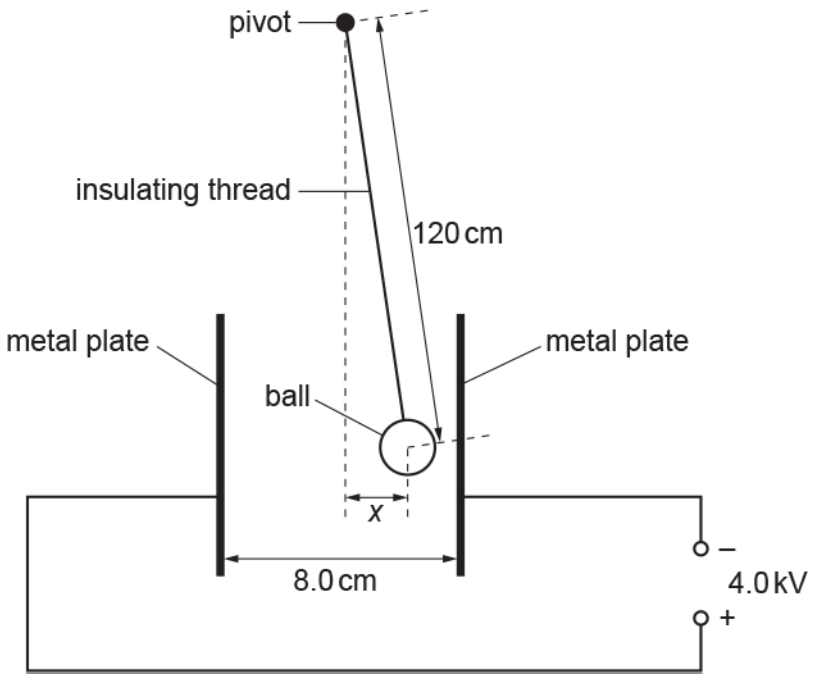

(i) Show that the electric force acting on the charged ball is 4.5×10^{-4} N.

[2]

(ii) Draw, on the diagram above, arrows which represent the **three** forces acting on the ball.
Label each arrow with the name of the force it represents.

STEMUP.CO.UK

[2]

(iii) By taking moments about the pivot, or otherwise, show that $x = 1.8$ cm.

[2]

STEMUP.CO.UK

(b) The ball is still positively charged.

The plates are now moved slowly towards each other whilst still connected to the 4.0 kV power supply. The plates are stopped when the separation is 5.0 cm.

Explain the effect that this has on the deflection of the ball and explain why the ball eventually starts to oscillate between the plates.

---

[4]

STEMUP.CO.UK

(c) When the ball oscillates between the plates, the current in the external circuit is 3.2×10^{-8} A.

A charge of 9.0 nC moves across the gap between the plates each time the ball makes one complete oscillation.

Calculate the frequency *f* of the oscillations of the ball.

f = ... Hz **[2]**

STEMUP.CO.UK

49(a) The International Space Station (ISS) orbits the Earth at a height of 4.1×10^5 m **above** the Earth's surface.

The radius of the Earth is 6.37×10^6 m. The gravitational field strength g_0 at the Earth's surface is 9.81 N kg^{-1}.

Both the ISS and the astronauts inside it are in free fall.

Explain why this makes the astronauts feel **weightless**.

---

[1]

(b)

(i) Calculate the value of the gravitational field strength g at the height of the ISS above the Earth.

g = ... N kg^{-1} **[3]**

(ii) The speed of the ISS in its orbit is 7.7 km s^{-1}. Show that the period of the ISS in its orbit is about 90 minutes.

[2]

STEMUP.CO.UK

(c) Use the information in **(b)(ii)** and the data below to show that the root mean square (r.m.s.) speed of the air molecules inside the ISS is approximately 15 times smaller than the orbital speed of the ISS.

- molar mass of air = 2.9×10^{-2} kg mol^{-1}
- temperature of air inside the ISS = 20 °C

[3]

STEMUP.CO.UK

(d) The ISS has arrays of solar cells on its wings. These solar cells charge batteries which power the ISS. The wings always face the Sun.

Use the data below and your answer to **(b)(ii)** to calculate the **average** power delivered to the batteries.

- The total area of the cells facing the solar radiation is 2500 m^2.
- 7% of the energy of the sunlight incident on the cells is stored in the batteries.
- The intensity of solar radiation at the orbit of the ISS is 1.4 kW m^{-2} outside of the Earth's shadow and zero inside it.
- The ISS passes through the Earth's shadow for 35 minutes during each orbit.

average power = ... W **[4]**

STEMUP.CO.UK

50 **Fig. 6.1** shows a uniform metal cylinder of weight 7.0 N. The cylinder has length 100 mm and diameter 32 mm.

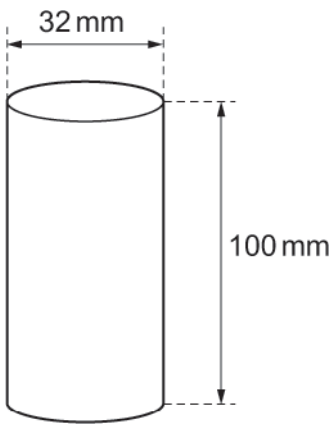

Fig. 6.1 (not to scale)

Fig. 6.4 shows the same cylinder at rest on a bench.

A horizontal force *F* is applied to the cylinder so that it can rotate about point **X**.

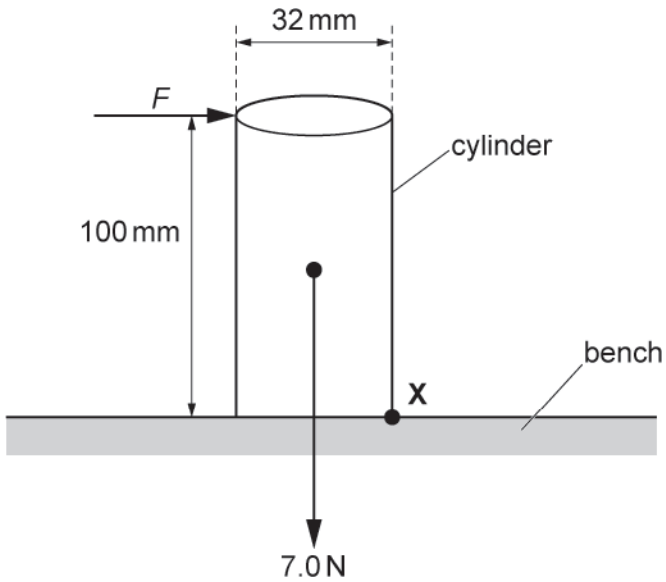

Fig. 6.4 (not to scale)

Calculate the minimum value of *F* to just topple the cylinder about **X**.

F = ... N **[2]**

END OF QUESTION PAPER

STEMUP.CO.UK

Question			Answer/Indicative content	Marks	Guidance
1			D	1	
			Total	1	
2			A	1	
			Total	1	
3			C	1	
			Total	1	
4		i	Both forces shown in correct direction and arrows of same length.	B1	
		ii	Zero.	B1	
		iii	(Conservation of momentum) $u_x = v_x + v_z$	C1	
		iii	(Conservation of kinetic energy) $u^2_x = v^2_x + v^2_z$	C1	
		iii	Shows $v_x = 0$ by substitution	C1	
		iii	$v_z = u_x$ by substitution of $v_x = 0$	A1	
			Total	6	
5	a		Force is proportional to the product of the mass of each asteroid. **and** the force is inversely proportional to the distance squared between the centres of mass of the asteroids.	B1	
	b		Use of $M = gr^2 / G$ (accept any subject)	C1	Calculation using g = 1.72 at radius of 15300 km Possible ecf from **(b)(i)**
			Density = $3g / 4\pi rG = 3 \times 9.81/4\pi \times 6.4 \times 10^6 \times 6.67 \times 10^{-11}$	C1	Density = $\frac{3 \times 1.72 \times (1.53 \times 10^7)^2}{4\pi \times (6.4 \times 10^6)^3 \times 6.67 \times 10^{-11}}$
			$= 5.49 \times 10^3$ (kg m^{-3})	A1	$= 5.50 \times 10^3$ kg m^{-3}
			Total	4	
6			A	1	
			Total	1	
7			D	1	
			Total	1	

© OCR 2022. You may photocopy this page.

Created in ExamBuilder

STEMUP.CO.UK

Question			Answer/Indicative content	Marks	Guidance
8		i	$a = F / m$ / $a = 8700 / 2300$	C1	
		i	$a = 3.8$	A1	**Note** answer is 3.78 to 3 s.f.
		ii	$D_{thinking} = u \times t = 22 \times 0.97 = 21.3$ (m)	C1	Allow 21.34
		ii	$D_{braking} = u^2 / 2a$ or $22^2 / (2 \times 3.8) = 64.0$ (m)	C1	Allow 63.98
		ii	stopping distance = $D_{thinking} + D_{braking}$ or 21.3 + 64.0	C1	Allow ecf
		ii	stopping distance = 85.3 (m)	A0	Allow 85.32
		iii	22 × 3600 / 1600 (= 49.5 mph)	B1	
		iv	Thinking distance for truck longer than in chart	B1	
		iv	Suggested reason e.g. tired	B1	Allow any relevant factor
		iv	Braking distance for truck longer than in chart	B1	
		iv	Suggested reason e.g. truck more massive than a car, truck's brakes are poor quality	B1	Ignore reference to road conditions
			Total	10	
9	a		(For a system in equilibrium) the sum of the clockwise moments (about the same point) = sum of anticlockwise moments	B1	**Allow** total / ∑ / resultant for 'sum' **Allow** the sum of moments = 0
	b	i	(Clockwise moment) $T \sin 50° \times 0.030$	C1	
		i	(Anticlockwise moment) 260 × 0.40	C1	**Allow** N cm
		i	$T \sin 50° \times 0.030 = 260 \times 0.40$		
		i	$T = 4500$ N	A1	**Allow** 4525 N
		ii	Perpendicular distance of weight to P decreases	M1	
		ii	So T must decrease.	A1	
			Total	6	

© OCR 2022. You may photocopy this page.

Created in ExamBuilder

STEMUP.CO.UK

Question			Answer/Indicative content	Marks	Guidance
10			volume = π × 0.035^2 × 0.085 = 0.000327	C1	
			$m = \rho V$ = 1000 × 0.000327	C1	
			mass = 0.33 (kg)	A0	
			Total	2	
11		i	tension = 850 kg × 9.81 = 8300 N	B1	
		ii	work done = mgh = 850 × 9.81 × 12	C1	
		ii	work done = 100 kJ	C1	
		ii	output power = 100 × 10^3 / 40 (=2501 W)	C1	
		ii	input power (= 2501 / 0.6) = 4200 (W)	A1	
		iii	Suggestion to reduce heat losses through friction in moving parts e.g. oil, bearings	B1	
		iii	Use a stiffer / stronger cable to reduce energy loss through stretching	B1	
			Total	7	

© OCR 2022. You may photocopy this page.

Created in ExamBuilder

STEMUP.CO.UK

Question			Answer/Indicative content	Marks	Guidance
12	a	i	250 × 60 = 15000 J	C1	
		i	energy = $\frac{15000}{0.65}$ = 2.3×10^4 (J)	A1	
		ii	drag force = 0.4×6.0^2 = 14.4 N	C1	
		ii	forward force = power / velocity = 250/6.0 = 41.7 N	C1	
		ii	acceleration = $\frac{41.7 - 14.4}{85}$ = 0.32 m s^{-2}	A1	
	b	i	weight; (tractive) force up slope; drag; (normal) reaction		
		i		B1	
		i	All forces in correct direction and correctly labelled.		
		ii	14.4 + (85 × 9.81 × sin θ) = 41.7	C1	**ecf** from **(a)(ii)**
		ii	θ = 1.9 °	A1	
	c		any three from: • drag reduces velocity **or** increases time to cross **or** some kinetic energy of cyclist goes to heat. • longer crossing time results in cyclist at lower point on other side of gap. • moment on bicycle • rotation lowers height of front wheel.	B1 × 3	Allow argument based on: • very short crossing time (< 0.43s at speed of 6 ms^{-1} up slope). • energy changed to heat insignificant compared to KE • amount of rotation very small in short time.
			Conclusion based on argument(s). The maximum gap width is smaller.	B1	conclusion based on argument(s). So no change in maximum gap width.
			Total	12	

© OCR 2022. You may photocopy this page.

Created in ExamBuilder

STEMUP.CO.UK

Question			Answer/Indicative content	Marks	Guidance
13		i	The charges repel each other (because they have like charges).	B1	
		i	Each charge is in equilibrium under the action of the three forces: downward weight, a horizontal electrical force and an upwardly inclined force due to the tension in the string.	B1	
		ii	$F = \frac{(4.0\times10^{-9})^2}{4\pi\varepsilon_0 \times 0.02^2} = 3.596....\times10^{-4}$ (N)	C1	Correct use of $F = \frac{Qq}{4\pi\varepsilon_0 r^2}$
		ii	weight $W = 6.0 \times 10^{-5} \times 9.81 = 5.886 \times 10^{-4}$ (N)	C1	
		ii	$\tan\theta = \frac{3.596\times10^{-4}}{5.886\times10^{-4}}$	C1	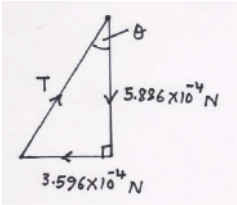
		ii	angle θ = 31°	A1	
			Total	6	
14		i	ρ = m/V = m/Av; so m = Aρv	C1	
		i	$7.5 \times 10^{-5} \times 1000 \times v = 0.070$	A1	
		i	giving v = 0.93 (m s^{-1})	A0	
		ii	3.7 (m s^{-1})	A1	Accept 3.72
		iii	F = Δ(mv)/Δt = 0.070 × (3.72 – 0.93)	C1	ecf (ii)
		iii	F = 0.195 (N)	A1	accept 0.19 or 0.2(0)
		iv	arrow into the shower head perpendicular to its face.	B1	award mark for a reasonable attempt.
			Total	6	

© OCR 2022. You may photocopy this page.

Created in ExamBuilder

STEMUP.CO.UK

Question			Answer/Indicative content	Marks	Guidance
15			W of tube = upthrust (caused by submerged length) = A(0.30 – l) ρg	B1	Archimedes principle expressed in some form.
			W = 0.5 × 9.8 = 4.9 = $\pi(2.5 \times 10^{-2})^2 \times (0.3 - l) \times 1.0 \times 10^3 \times 9.8 = 19.2\ (0.30 - l)$	C1	
			0.30 – l = 0.255 giving l = 0.045 m = 45 (mm).	A1	
			Total	3	
16	a	i	1. *either* resultant force $F = ma - R$ *or* resultant force decreases as R increases	B1	**allow** for points 2 and 3 *when* $F = R$ appearing only once
		i	2. acceleration a decreases to zero when $F = R$	B1	
		i	3. velocity rises from zero to a terminal / maximum value when $F = R$	B1	
		ii	**1** initial acceleration is 40/120 = 0.33 (m s^{-2})	B1	
		ii	**2** from the graph Rv = 200 (W) so R = 40 N	C1	**or** forward force = 40 N so R = 40 N for constant
		ii	and terminal velocity v is 5 (m s^{-1})	A1	speed / zero acceleration
	b		p.e. / second = mgvsin θ = 120 × 9.81 × 5 × sin θ	C1	**allow** force downhill F = mgsin θ, extra power = Fv
			extra power= 200 (W)	C1	
			so sin θ = 1/29.4 giving × = 29 m	A1	
			Total	9	
17			$eV = ½mv^2$ so $v^2 = 2eV/m$ ma = eE so a = eE/m x = vt $d = ½at^2 = ½a(x/v)^2$ $d = (eE/2m).x^2.(m/2eV) = Ex^2/4V$ $x^2 = 4(d/E)V$	B1 B1 B1 B1 B1 A0	four equations are needed and some sensible substitution, etc. shown for the fifth mark
			Total	5	

STEMUP.CO.UK

Question			Answer/Indicative content	Marks	Guidance
18	a		pV/T = constant $(1.0 \times 10^5 V)/290 = (1.0 \times 10^3 \times 1.0 \times 10^6)/230$ $V = 1.26 \times 10^4$ (m^3)	B1 B1 B1	
	b	i i	$n = pV/RT = 1.0 \times 10^5 \times 1.26 \times 10^4/(8.31 \times 290)$ $n = 5.2 \times 10^5$	B1 B1	ecf allow 5.4×10^5 using 1.3×10^4
		ii	$4.0 \times 10^{-3} \times 5.2 \times 10^5 = 2.1 \times 10^3$ (kg)	B1	ecf (i)
	c		(internal energy ∝ T) E = 1900 × 230/290 = 1500 (MJ)	B1	
	d		$U = \rho Vg = 1.3 \times 1.26 \times 10^4 \times 9.81 = 1.61 \times 10^5$ Ma = U – Mg $27\ M = 1.6 \times 10^5 - Mg$ giving $M = 4.3 \times 10^3$ kg	C1 C1 A1	or $1.3 \times 1.3 \times 10^4 \times 9.81 =$ 1.66×10^5 $M = 4.6 \times 10^3$ kg
			Total	10	
19			C	1	
			Total	1	
20			A	1	
			Total	1	
21			C	1	
			Total	1	
22			B	1	
			Total	1	

© OCR 2022. You may photocopy this page.

Created in ExamBuilder

STEMUP.CO.UK

Question			Answer/Indicative content	Marks	Guidance
23	a		sum of clockwise moments (about a point / axis) = sum of anticlockwise moments (about the same point /axis)	B1	**Allow** total / Σ for 'sum'
	b		Allow the object to hang freely from one of the holes around the edge of the head gasket using a nail secured in a clamp stand. (AW)	B1	
			Draw a vertical line downwards using a plumb line. (AW)	B1	
			Repeat for at least one more hole.	B1	
			Where the lines intersect is the centre of gravity.	B1	Allow another correct method.
	c	i	(Sum of clockwise moments = sum of anticlockwise moments)	C1	
			95 × 9.81 × 1.80 / 120 × 9.81 × 1.00 / 1.60 × T sin 30°		
		i	(95 × 9.81 × 1.80) + (120 × 9.81 × 1.00) = 1.60 × T sin30°	C1	
		i	$T = 3.6 \times 10^3$ (N)	A1	**Note** answer to 3 s.f. is 3.57×10^3 (N)
		ii	$\sigma = \frac{3.6\times10^3}{\pi\times0.015^2}$	C1	Possible ECF from part **(i)**
		ii	$\sigma = 5.1 \times 10^3$ (kPa)	A1	**Allow** 1 mark for 5.1×10^6; POT error **Note** using 3.57×10^3 N gives 5.05×10^3 (kPa)
		iii	The clockwise moment increases and therefore T increases.	B1	
			Total	11	
24		i	Using the graph to determine at least two ratios of the amplitudes.	M1	For example: 2.5/3.0 and 2.1/2.5
		i	Correct statement matching the ratios.	A1	For example: 'The statement is correct because 2.5/3.0 ≈ 2.1/2.5 ≈ constant. '
		ii	At time $t = 0$	M1	
		ii	Oscillator has maximum speed and hence the greatest friction. (AW)	A1	
			Total	4	

© OCR 2022. You may photocopy this page.

Created in ExamBuilder

STEMUP.CO.UK

Question			Answer/Indicative content	Marks	Guidance
25		i	distance = 550 × 9.5 × 10^{15} (m)	C1	
		i	$L = \frac{4\pi\times(550\times9.5\times10^{15})^2}{4.0\times10^{-4}} \times 2.6 \times 10^{-11}$	C1	
		i	L = 2.2 × 10^{31} (W)	A1	
		ii	$(r = \sqrt{\frac{L}{4\pi\sigma T^4}})$; $r = \sqrt{\frac{2.2\times10^{31}}{4\pi\times5.67\times10^{-8}\times(3.1\times10^3)^4}}$	C1	**Possible** ECF from **(i)** **Allow** any subject
		ii	r = 5.8 × 10^{11} (m)	A1	
		iii	mass = 4.4 × 10^{-5} × 4/3π × (5.8 × 10^{11})^3 $g = \frac{6.67\times10^{-11}\times4.4\times10^{-5}\times{}^4/_3\pi\times(5.8\times10^{11})^3}{(5.8\times10^{11})^2}$	C1	**Possible** ECF from **(ii)**
		iii	g = 7.1 × 10^{-3} (N kg^{-1})	A1	
			Total	7	
26		i	($v^2 = u^2 + 2as$) (2.4 × 10^6)^2 = (7.2 × 10^6)^2 + 2 × a × 1.2 × 10^{-2}	C1	**Allow** other correct methods
		i	a = (–) 1.9 × 10^{15} (m s^{-2})	A1	**Allow** 1 mark for 1.9 × 10^{13}; distance left in cm **Note** answer to 3 s.f. is 1.92 × 10^{15} (m s^{-2}) **Ignore** sign
		ii	$E = F/Q$ and $F = ma$	C1	
		ii	$E = \frac{1.67\times10^{-27}\times1.92\times10^{15}}{1.60\times10^{-19}}$	C1	Possible ECF from **(i)**
		ii	E = 2.0 × 10^7 (N C^{-1})	A1	**Allow** 2 marks for 1.1 × 10^4; mass of electron used **Allow** 1 s.f. answer
			Total	4	
27			p = ρgh = 1.3 × 9.81 × h = 1.0 × 10^5	B1	
			h = 7.8 km	B1	
			Total	2	

STEMUP.CO.UK

Question			Answer/Indicative content	Marks	Guidance
28			B	1	Examiner's Comments This question proved particularly straightforward and accessible to nearly all candidates.
			Total	1	
29			D	1	Examiner's Comments This question showed that candidates had generally forgotten that the resultant force does not have to be in the direction of travel, hence all three statements could be correct, giving option D. This question provided opportunities for middle-grade candidates.
			Total	1	

© OCR 2022. You may photocopy this page.

Created in ExamBuilder

STEMUP.CO.UK

Question			Answer/Indicative content	Marks	Guidance
30	a		Use a thermometer (with ± 1 °C) Stir water bath / avoid parallax (for glass thermometer)	B1 B1	**Allow** 'temperature sensor / gauge' **Allow** 'avoid touching sides of water bath with thermometer' **Allow** 'take temperature in several places / times and average' **Allow** idea of 'leave thermometer for long time (to reach thermal equilibrium)' **Not** idea of 'use thermometer with finer resolution' **Examiner's Comments** A large majority included a correct measuring device, such as a thermometer. Significantly fewer described a technique for accurate measurements such as stirring the water or taking the temperature at several points and calculating a mean temperature.
	b	i	Smaller (spacing between) divisions / increments (AW)	B1	**Ignore** any reference to accuracy or precision **Allow** 'less uncertainty' **Allow** better or smaller or greater or higher resolution **Examiner's Comments** Approximately half of the candidature made a correct comment regarding resolution or that the smaller intervals on the psi scale made it a sensible choice of scale.
		ii	p = 37.0 × 4.448 / (1000 × 0.0254^2) 255 (kPa) uncertainty = 3 (kPa)	 B1 B1	**Allow** clearly identified correct answer in table or in working area. Must be 3sf Must be 1sf **Allow** 255.1 ± 3.4 scores mark 1 **Examiner's Comments** The vast majority of candidates correctly calculated the pressure in kPa and stated that the absolute uncertainty was 3 kPa. A very small number of responses were rounded inappropriately.

© OCR 2022. You may photocopy this page.

Created in ExamBuilder

STEMUP.CO.UK

Question			Answer/Indicative content	Marks	Guidance
	c	i	Point plotted at (44, 255)	B1	ECF from **(b)(ii)** Plot to with ± half a small square **Ignore** checking error bars **Examiner's Comments** Most candidates correctly plotted the point with error bars. In this instance during marking Examiners were instructed to ignore the error bars as they were too difficult to view when scanned.
		ii	**Level 3 (5–6 marks)** Clear explanation, description **and** determination *There is a well-developed line of reasoning which is clear and logically structured. The information presented is relevant and substantiated.* **Level 2 (3–4 marks)** Some explanation, description **and** determination Or Some explanation and clear determination *There is a line of reasoning presented with some structure. The information presented is in the most part relevant and supported by some evidence.* **Level 1 (1–2 marks)** Limited explanation or description or determination *The information is basic and communicated in an unstructured way. The information is supported by limited evidence and the relationship to the evidence may not be clear.* **0 marks** No response or no response worthy of credit.	B1 × 6	**Indicative scientific points may include:** **Explanation and Description** • Absolute zero is the minimum possible temperature / at absolute zero KE is zero • At absolute zero p is zero • At absolute zero, the internal energy is minimum (allow 0) • Absolute zero should be (about) –273 °C • Reference to $pV = nRT$ or $pV = NkT$ or $p \propto T$ • A graph of p against θ is a straight line / straight line drawn on graph • Intercept of straight line with x-axis or θ-axis is absolute zero calculated by using y= mx + c **Determination** • Gradient in the range 0.7 to 0.9 (kPa K^{-1})

STEMUP.CO.UK

Question			Answer/Indicative content	Marks	Guidance
					• $y = mx + c$ used to determine the intercept c or absolute zero • Absolute zero in the range –320 °C to –240 °C Use only L1, L2 and L3 in RM Assessor. Examiner's Comments It was clear that the majority of candidates had either performed this experiment themselves or had otherwise seen it before. The concept of absolute zero was very successfully described and many knew that an extrapolation or calculation involving the equation of a straight line was required to find absolute zero as the x-intercept of the straight line. Common errors included mis-calculating the gradient, inability to rearrange the equation or inappropriate conversion to kelvin. Re-plotting the graph was not required and merely wasted time for little reward.
	d		Draw the worst fit line (through all the error bars) (AW). Determine the new value for absolute zero and find the difference between the value in **(c)(ii)** and this new intercept. (AW)	B1 B1	Examiner's Comments Many candidates realised that drawing a line of worst fit was sensible. Far fewer were clear that using the line of worst fit to find a new x-intercept, leading to a spread in values for absolute zero was the correct procedure. Many incorrectly suggested finding the difference in gradients, or percentage differences in gradients.

© OCR 2022. You may photocopy this page.

Created in ExamBuilder

STEMUP.CO.UK

Question			Answer/Indicative content	Marks	Guidance
	e		Cooling gas value of absolute zero is lower than **(c)(ii)**	B1	
			(Whilst cooling, the) temperature of gas lags behind the temperature of water (AW, ORA)	B1	
			Graph is shifted to the left	B1	**Allow:** gradient is too shallow **Allow:** *p* measured is higher than expected for incorrect measurement of *T* (so affects the graph) (AW, ORA)
			Stir water / <u>wait</u> for temperatures to be the same / attempt at measuring temperature of gas directly (AW)	B1	**Not** insulation of water bath **Not** heat losses **Examiner's Comments** The first mark for this item was intended to be for a straightforward comparison that the repeated experiment yielded a lower value than that from part **c(ii)**. Many candidates calculated a percentage difference yet did not refer to the direction of difference. Some candidates successfully suggested that the water would always be cooler than the gas and so the thermometer reading would be systematically lower than the true temperature of the gas. Rather fewer discussed that the pressure reading would therefore be higher than it should be for the thermometer reading. Very few candidates linked this idea to the effect on the graph, namely that the points would all be shifted to the left, causing a lower x-intercept or a less steep line of best fit. There were three acceptable experimental approaches to avoid this systematic error. Stirring the water and waiting until the gas and water equilibrated would have reduced the effects of the rapid cooling. A sensible approach employed by some candidates was to take the temperature of the gas directly using a thermometer or temperature inside the flask.
			Total	18	

© OCR 2022. You may photocopy this page.

Created in ExamBuilder

STEMUP.CO.UK

Question			Answer/Indicative content	Marks	Guidance
31	a		arrow down through centre of ball labeled weight **or** W **or** mg **or** 1.2 N	B1	zero if any other arrows or forces present Examiner's Comments There were some carelessly drawn arrows on the diagram but otherwise this was done well. There were some arrows labelled *centripetal force.*
	b	i	(horizontally) mv^2/r (**or** $mr\omega^2$) = T sin θ **and** (vertically) W **or** mg = T cos θ (tan θ = v^2/rg **or** rw^2/g) tan θ = 0.045 × 4 × 9.87 × 2.2 / 9.81 **or** 0.48 / 1.2 (= 0.40) θ = 22°	M1 A1 A0	**accept** figures in place of algebra, r = 0.045 m v = 0.42 m s^{-1} ω = 3π rad s^{-1}; $r\omega^2$ = 4.0 m s^{-2} ; W = 1.2 N and m = 0.12 kg and $mr\omega^2$ = 0.48 N **accept** labelled triangle of forces diagram **N.B.** this is a *show that Q* ; sufficient calculation must be present to indicate that the candidate has not worked back from the answer
		ii	k = (mg / x_0 = 1.2 / 0.050) = 24 (N m^{-1}) (T = mg / cos θ = kx giving) x = 1.2 / 24 cos 22 x = 0.054 (m)	C1 C1 A1	**or** solution by ratios Examiner's Comments About half of the candidates completed the angle calculation successfully with a slightly smaller number finding the correct extension of the string.
	c		(y = ½gt^2 =) 0.18 = 0.5 × 9.81 × t^2 giving t = 0.19 (s) (x = vt =) 0.42 × 0.19 = 0.08 (m) distance = √(r^2 + x^2) = √(0.0020 + 0.0064) = 0.092 (m)	C1 C1 C1 A1	**alt:** projectile motion: x = vt, y = ½gt^2 y = ½g(x / v)^2 **ecf (b)i** for v; x^2 = $2yv^2/g$ = 2 × 0.18 × 0.42^2/9.81 Examiner's Comments About half of the candidates found the time for the ball to fall to the bench. Most then managed to find the horizontal distance from the point of release, but half forgot that the point of reference in the question was the centre of rotation so failing to complete the calculation.

STEMUP.CO.UK

Question			Answer/Indicative content	Marks	Guidance
	d		T increases **or** string stretches **or** angle θ increases to provide / create a larger centripetal force	M1 A1	**allow** mv^2/r **or** $mr\omega^2$ in place of *centripetal force* causality must be implied to gain the A mark Examiner's Comments About half of the candidates appreciated that the tension in the string increased or that the angle of the string to the vertical increased. Most answers gave the impression that the *centripetal force* was a *real* force rather than its provision being necessary for the ball to follow a circular path
			Total	12	

© OCR 2022. You may photocopy this page.

Created in ExamBuilder

STEMUP.CO.UK

Question			Answer/Indicative content	Marks	Guidance
32	a	i	volume = $7.0 \times 10^{-2} \times \pi \times (0.5 \times 10^{-2})^2$ or 5.5×10^{-6} (m^3) $p = 5.0 \times 10^{-3} / (7.0 \times 10^{-2} \times \pi \times (0.5 \times 10^{-2})^2)$ density = 910 (kg m^{-3})	C1 A1	No ecf for incorrect volume. Answer to 3 s.f. is 909 **Allow** 1 mark for 230 ($r = 1.0 \times 10^{-2}$ m used) **Examiner's Comments** Examiners were delighted to see that nearly all candidates could successfully calculate the density of the wood block, although some candidates missed that the diameter rather than the radius was provided. A small number neglected to check the formula for the volume of a cylinder, which was provided in the Data, Formulae and Relationships booklet.
		ii	The density (of wood is) similar to human (AW) Less than density of water / it needs to float / otherwise it will sink	B1 B1	**Allow** 'greater upthrust than weight when fully submerged' **Examiner's Comments** 18ai was intended as a guide to the candidates that the wood's density was relevant. Many candidates successfully saw the link between the wood's density and that of the diver, yet fewer realised the consequence of this i.e. that the wood would reach a deepest point in the water and then float back to the surface. Predominantly, candidates sought to describe a second physical property in ways beyond the scope of the specification, such as impermeability to water and shape retention.

STEMUP.CO.UK

Question			Answer/Indicative content	Marks	Guidance
	b	i	weight / *W* / *mg* **and** downward arrow	B1	**Allow** labels used in **(c)(i)** throughout
			upthrust / *U* **and** upward arrow	B1	**Ignore** arrow sizes.
			drag / *D* / friction **and** upward arrow	B1	**Allow** '(water) resistance' for drag **Examiner's Comments** The forces referred to by name in module 3 of the specification are weight, drag, upthrust. tension, normal contact force and friction. Candidates should be aware that the three relevant forces in this example are upthrust, weight and drag (with friction as an acceptable alternative). A wide range of other options were provided by candidates, such as gravity, buoyancy, lift, pressure, impulse and air resistance, none of which were acceptable.

© OCR 2022. You may photocopy this page.

Created in ExamBuilder

STEMUP.CO.UK

Question			Answer/Indicative content	Marks	Guidance
		ii	Resultant force decreases (with time or as cylinder descends)	B1	
			Upthrust remains constant / drag decreases (as speed decreases) / resultant force is upwards / At lowest point, drag is zero	B1	**Allow** 'At lowest point, upthrust > weight' **Note:** Any incorrect answer from the list will not score this point
			At lowest point, resultant force is upwards	B1	**Not** 'resultant force = 0' **Note:** Resultant force is <u>always</u> upwards' scores B1×2 **Examiner's Comments** Examiners would like to see an improvement in the understanding of the forces acting on objects in motion as this item on resultant forces was not answered well. A large proportion of candidates misunderstood the scenario, believing it to be a terminal velocity problem. This meant that many responses included the notion that the block would speed up and eventually have zero resultant force acting upon it. In this case, that would mean that the block would continue at constant velocity downwards rather than return to the surface. This item prompted the candidates by asking about the resultant force at the lowest point of the motion, which tying in with the ideas in previous parts of the question about density and floatation, should have hinted that the resultant force at the lowest point was upwards. Those candidates that did realise this often contradicted themselves to ensure an upwards resultant at the bottom of the motion. Typically, this was by stating, incorrectly, that the upthrust or the drag increased, at which point only one mark was possible.

© OCR 2022. You may photocopy this page.

Created in ExamBuilder

STEMUP.CO.UK

Question			Answer/Indicative content	Marks	Guidance
	c		Doubling the depth is too much / d is not (directly) proportional to h Qualifying statement using evidence from graph e.g. decreasing gradient, use of numbers to show not proportional, comment about non-zero intercept etc	B1 B1	Examiner's Comments Candidates generally had the right idea on this item yet lacked clear enough language to express themselves adequately. Many had some success by referring specifically to data from the graph or the shape of the trendline to support their assertions. Less convincing attempts included those that suggested that there was square root relationship presumably with Newton's equations of motion in mind, without any justification for doing so from the graph. Centres are reminded that situations with changing accelerations are not expected to be solved algebraically at A2 level.
			Total	12	
33			D	1	Examiner's Comments If this system is in equilibrium, then the moment due to tension T must equal the moment of the couple formed by the two 50 N forces. Many candidates forgot to include one of the two 50 N forces. Since the force is 50 N and the separation is 0.80 m, then the moment of the couple is 40 Nm.
			Total	1	
34			D	1	Examiner's Comments Most candidates did not realise that both the suspended mass and the trolley are moving with acceleration *a*. The resultant force along for this composite object is *W* and the total mass is (M + W/g), giving D as the acceleration.
			Total	1	

© OCR 2022. You may photocopy this page.

Created in ExamBuilder

STEMUP.CO.UK

Question			Answer/Indicative content	Marks	Guidance
35			C	1	
			Total	1	
36			$mv^2/r = mg$ or $v^2/r = g$ $v^2 = 9.81 \times 0.25$ $v = 1.6$ (m s^{-1})	C1 C1 A1	Allow: $v^2/r = a$ <u>and</u> $a = g$ or $mv^2/r = ma$ <u>and</u> $a = g$ Allow: any subject Allow: any subject Note: qualified 2.21 (ms^{-1}) scores 2 marks. <u>Examiner's Comments</u> This question was answered well by those above the mean result. When the machine is switched off, the clothes are still in circular motion and at point B, the resultant force is still the weight of the clothes plus the normal contact force. This means at the critical speed when the clothes fall off at point B, the centripetal force will equal the weight of the clothes, since the question states that the normal contact force is zero.
			Total	3	

STEMUP.CO.UK

Question			Answer/Indicative content	Marks	Guidance
37		i	(For circular orbit) centripetal force provided by gravitational force (of attraction) (Gravitational / centripetal) force is along line joining stars which must therefore be diameter of circle (AW)	M1 A1	Examiner's Comments Only a minority of candidates related the gravitational force between the stars to the centripetal force required for circular motion to occur. This candidate has written the perfect answer (exemplar 5). There were two popular insufficient answers; that if the stars were not diametrically opposite they would collide and that the centre of mass of the system had to be at the centre of the orbit. Exemplar 5 *. Their gravitational force to each other acts as the centripetal force. * Gravitational force is directly towards their centers which means the centripetal force is on the same line of the gravitational force so the center of orbit must be on the line of their center as the diameter.

STEMUP.CO.UK

Question			Answer/Indicative content	Marks	Guidance
		ii	T = 20.5 × 86400 (= 1.77 × 10^6 s) and R = 1.8 × 10^{10} (m)	C1	values of T **and** R scores first mark; **both** incorrect 0/3
			$m = 16 \times \pi^2 \times (1.8 \times 10^{10})^3/G \times (20.5 \times 86400)^2$	C1	correct substitution allowing π^2 and G $m = 16 \times 9.87 \times 1.8^3 \times 10^{30}/6.67 \times 10^{-11} \times 1.8^2 \times 10^{12}$
			giving $m = 4.4 \times 10^{30}$ so $m = 2.2\ M_\odot$	A1	using 2R gives $35.2 \times 10^{30} = 17.6\ M_\odot$ or using T = 1 day gives $1850 \times 10^{30} = 930\ M_\odot$ **award** 2/3 <u>Examiner's Comments</u> This question tested the candidates' ability to interpret and substitute data into an elaborate formula and then evaluate it. The most common error was to write the formula with the correct substitutions but then to omit the square symbol against T. Candidates should be encouraged to consider whether their answers are reasonable before moving on to the next question. In the calculation (exemplar 6) shown here, is it possible that these stars could be four million times the mass of the Sun? The correct answer of 2.2 Sun masses seems very plausible and should give candidates confidence. Exemplar 6 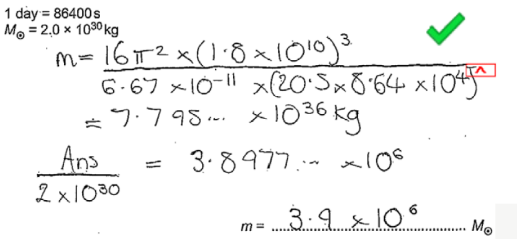 1 day = 86400 s $M_\odot = 2.0 \times 10^{30}$ kg $m = \frac{16\pi^2 \times (1.8 \times 10^{10})^3}{6.67 \times 10^{-11} \times (20.5 \times 8.64 \times 10^4)^2}$ $= 7.795\ldots \times 10^{36}$ kg $\frac{\text{Ans}}{2 \times 10^{30}} = 3.8977\ldots \times 10^6$ $m = 3.9 \times 10^6\ M_\odot$

STEMUP.CO.UK

Question			Answer/Indicative content	Marks	Guidance
		iii	$v = 2\pi R/T = 2 \times 3.14 \times 1.8 \times 10^{10} / 1.8 \times 10^{6}$ (giving $v = 6.3$ or 6.4×10^{4}) $\Delta\lambda = (v/c)\lambda = (6.3/3) \times 10^{-4} \times 656 = 0.14$ (nm)	C1 A1	**do not** penalise repeated error for R or T **ecf** for incorrect v, gives $\Delta\lambda = v \times 2.2 \times 10^{-6}$ $\Delta\lambda = 0.28$ for 2R; $\Delta\lambda = 2.9$ for 1 day and $\Delta\lambda = 5.7$ for both incorrect <u>Examiner's Comments</u> Most of the higher performing candidates completed this problem successfully. Two common errors among the remainder were to equate the formula for central force gravitational potential energy *(GMm/r)* to kinetic energy to find a value for the speed of the stars and to rewrite incorrectly metres in powers of 10 in nanometres.
			Total	7	

© OCR 2022. You may photocopy this page.

Created in ExamBuilder

STEMUP.CO.UK

Question			Answer/Indicative content	Marks	Guidance
38	a		pV = constant (or $p_1V_1 = p_2V_2$) p_{final} = 2.4 x 10^5 x 1.2/1.5 = 1.9(2) x 10^5 (Pa)	C1 C1 A1	Alternative method: $p = nRT/V$ (p must be the subject) **Allow** use of $p = NkT/V$ (with N = 7.2 x 10^{22} and k = 1.38 x 10^{-23}) Substitute p = 0.12 x 8.31 x 290 / 1.5 x 10^{-3} ECF from 1a for incorrect n and/or T p = 1.9(3) x 10^5 (Pa) Examiner's Comments Questions 1(a) and 1(b) took the ideal gas equation and applied it to an unfamiliar situation, that of a toy rocket. Most candidates answered these questions well, remembering to convert the temperature from 17°C to 290K.
	b	i	Δp = (2.4 – 1.0) - 10^5 = 1.4 x 10^5 (Pa) upwards force *(= ΔpA)* = (2.4 – 1.0) x 10^5 x 1.1 x 10^{-4} = 15 (N)	C1 C1 A0	Alternative method: Downwards force (from trapped air) = pA = 2.4 x 10^5 x 1.1 x 10^{-4} = 26.4 (N) **and** upwards force (from atmosphere) = pA = 1.0 x 10^5 x 1.1 x 10^{-4} = 11.0 (N) So total upwards force = 26.4 – 11.0 = 15.4 (N) **Ignore** any attempt to calculate weight **Special case: Allow** 1/2 for the use of Δp = 2.4 x 10^5 (Pa) giving upwards force = 26.4 (N) Examiner's Comments Most candidates realised that a difference in air pressure between the inside and outside of the bottle would force the water downwards, producing an upwards force on the bottle which could be calculated using p = F/A.

© OCR 2022. You may photocopy this page.

Created in ExamBuilder

STEMUP.CO.UK

Question			Answer/Indicative content	Marks	Guidance
		ii	m = 0.3 + 0.05 (= 0.35) (kg) (Resultant force = upwards force – W = ma) 15.4 – (0.35 x 9.81) = 0.35a **or** a = 12/0.35 a = 34 (m s^{-2})	C1 C1 A1	0.050 + (10^3 x 0.3 x 10^{-3}) <u>Alternative approach</u>: a = (15.4/m) - g ECF for incorrect value of m **No** ECF ci (since we are told that upwards force = 15(.4)(N)) Upwards force = 15 (N) gives a = 33 (m s^{-2}) <u>Examiner's Comments</u> This question, although a simple F = ma problem, challenged many candidates. Exemplar 1 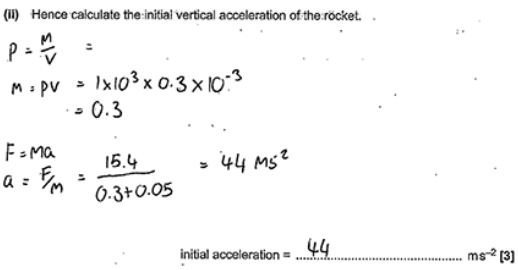 (ii) Hence calculate the initial vertical acceleration of the rocket. $\rho = \frac{m}{V}$ = $m = \rho V = 1\times10^3 \times 0.3 \times 10^{-3}$ $= 0.3$ $F = ma$ $a = F/m = \frac{15.4}{0.3+0.05} = 44\ ms^{-2}$ initial acceleration = 44 ms^{-2} [3] Exemplar 1 shows the most common incorrect response. The correct value for mass (m = 0.35kg) has been used, but the value for the upwards force (15.4N) rather than the resultant force (15.4 – mg) has been used for F.

STEMUP.CO.UK

Question			Answer/Indicative content	Marks	Guidance
	c		• (initial) upward force unchanged • (initial) downwards force/weight increases • (initial) resultant force decreases • (initial) acceleration decreases • (initial) rate of change in momentum of rocket decreases • time taken to expel water increases • valid conclusion that the maximum height depends on more than one factor	B1 x 3	**Maximum 3** marks from 7 marking points: **Ignore** comments which assume an increase in pressure **Ignore** heavier **Allow** net or unbalanced or total for resultant **Allow** fuel for water e.g. the height depends on the bottle's velocity and its height when all the water has been expelled / the height depends on both the acceleration and the time taken to expel the water Examiner's Comments This question involved several factors and a conclusion was not required; hence the word 'discuss'. Candidates who performed well on this question realised that the weight of the rocket would increase, reducing the resultant force, and m would increase in the formula F = ma. These would both give a reduced initial acceleration and imply a smaller height. However, the time taken to expel the water would increase, meaning that the rocket would accelerate for longer. One common misconception was that the larger volume of water in the bottle would increase the pressure of the trapped air. However, as a pump was used to determine the pressure before lift-off, this argument was not given credit.
			Total	11	

© OCR 2022. You may photocopy this page.

Created in ExamBuilder

STEMUP.CO.UK

Question			Answer/Indicative content	Marks	Guidance
39			B	1	Examiner's Comments Before the cone reaches terminal velocity, it is still accelerating downwards so there is still a resultant force downwards. Once the cone is at terminal velocity, the resultant force must be zero. This means that the resultant force has decreased, giving the correct answer B.
			Total	1	

© OCR 2022. You may photocopy this page.

Created in ExamBuilder

STEMUP.CO.UK

Question			Answer/Indicative content	Marks	Guidance
40	a		F (= ma = 1.2 x 10^{-2} x 1.3) = 0.016 (N)	B1	Possible ECF from (**a**) (1.2 x 10^{-2} x their answer) **Note** answer to 3 SF is 0.0156 (N)
	b		W = 1.2 x 10^{-2} x 9.81 or 0.118 (N) 0.0156 = 0.118 – drag (Any subject) drag = 0.10 (N)	C1 C1 A1	Possible ECF from (**b**) **Allow**: use of 'g' for 9.81 **Allow** 0.1 (N) <u>Examiner's Comments</u> Most candidates correctly calculated the ball's weight. They had calculated the resultant force on the ball, using F = ma. The resultant force from the previous question was checked, as error carried forward rules applied. Exemplar 3 shows an excellent way of planning out how to answer this sort of question. Exemplar 3 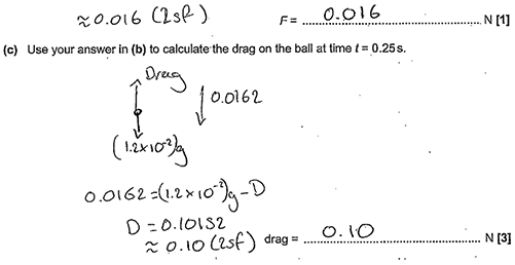 ≈0.016 (2sf) F = 0.016 N [1] (c) Use your answer in (b) to calculate the drag on the ball at time t = 0.25 s. Drag 0.0162 $(1.2\times10^{-2})g$ $0.0162 = (1.2\times10^{-2})g - D$ D = 0.10152 ≈ 0.10 (2sf) drag = 0.10 N [3] This candidate has drawn a free-body force diagram to make their intention clear. From it, they know that the resultant force must equal the weight minus the drag. From there they have found the drag force.

STEMUP.CO.UK

Question			Answer/Indicative content	Marks	Guidance
	c	i	Drag is the same (at a certain velocity) weight is greater or <u>resultant</u> force is larger)	B1 B1	**Allow** air resistance for drag <u>Examiner's Comments</u> Lots of candidates described the familiar ideas involving drag increasing with speed until the drag equals the weight's magnitude. The question was constructed to be simpler than this and asks to compare the forces on the 2 balls at a given speed. The weight of the sand-filled ball is larger. The 2 balls are identical in shape so at the same speed will have the same drag force. *Know what is coming!* Reading through to the end of the whole question is sensible. The answer candidates gave for Question 17(d)(i) would have formed part of the answer for Question 17(d)(ii), so valuable time can be saved by planning your answers for each part.
		ii	(TV requires) weight = drag **and** weight is greater Clear link to idea that greater speed gives greater drag (for same cross-sectional area)	B1 B1	<u>Examiner's Comments</u> The first mark here was for the knowing that the condition for terminal velocity was required, linked to the idea of the sand-filled ball having a larger weight. The second mark was more difficult to achieve, since a clear link between increased speed and increase drag was required.
			Total	**8**	

© OCR 2022. You may photocopy this page.

Created in ExamBuilder

STEMUP.CO.UK

Question			Answer/Indicative content	Marks	Guidance
41	a		(torque =) 350 x 0.0050 torque = 1.8 (N m)	C0 A1	Answer is 1.75 to 3 sf. **Allow**: 1.7 (N m)
	b		(Clockwise moments = anticlockwise moments) $7 \times 10^n \times F = 30 \times 10^n \times 31$ F = 130 (N) (mass $\frac{F}{g}$) mass = 14 (kg)	C1 C1 A1	**Allow** any power of 10 for distance as long as unit consistent. **Allow** R = 164 (N) found by taking moments about flat head of screw/point A **Note** F to 3SF is 133 (N)
			Total	4	

© OCR 2022. You may photocopy this page.

Created in ExamBuilder

STEMUP.CO.UK

Question			Answer/Indicative content	Marks	Guidance
42	a		(After 0.75 s) gradient decreases with time Indicating velocity is decreasing / deceleration	M1 A1	<u>Examiner's Comments</u> In part (b) some candidates were vague in their responses, for example, stating that the gradient changes rather than stating that the gradient decreases. In part (c) most candidates were able to draw a reasonable tangent. Parts (d) and (e) were harder to answer. Part (d) required the correct time interval to be applied by interpreting the braking time and not including the thinking time. In part (e), high achieving candidates applied the halving of the initial speed to the effect this had on the thinking distance, the thinking time, the braking distance and the braking time.
	b		Δtime = 1.75 – 0.75 OR 3.25 - 0.75 Using (c): $F = 950 \times \frac{20-12}{1.75-0.75}$ or Using graph: $F = 950 \times \frac{20-0}{3.25-0.75}$ or $F = \frac{950 \times 20}{3.25-0.75}$ 7600 (N)	C1 C1 A1	**Allow** use of **(c)** and **(a)** **Allow** a= 8.0 m s^{-2} for $v^2=u^2+2as$ or $s=ut+\frac{1}{2}at^2$ methods **Not** ECF for incorrect time **Ignore** sign
	c		Maximum of two from: (thinking) time is the same (braking) time is halved / 1.25 s total time is 2 s **AND** maximum of two from: (thinking) distance / displacement travelled (before braking) halved / 7.5 m (braking) distance / displacement quarters / 6.25 m total distance / displacement = 13.75 m	B1 ×3	
			Total	**8**	

STEMUP.CO.UK

Question			Answer/Indicative content	Marks	Guidance
43			C	1	
			Total	1	
44			A	1	
			Total	1	
45			B	1	
			Total	1	

© OCR 2022. You may photocopy this page.

Created in ExamBuilder

STEMUP.CO.UK

Question			Answer/Indicative content	Marks	Guidance
46	a		Arrow vertical down <u>and</u> an arrow opposite to the frictional force. Both arrows labelled correctly.	M1 A1	**Allow** weight / *mg* / W for the downward arrow <u>and</u> tension / *T* / 'force in rod' / 'force in tow bar' /'driving force' for the 'upward' arrow
	b		(W_s =) 1100 × 9.81 × sin 10° **or** 1100 × 9.81 × cos 80° (W_s = 1874 N or 1900 N)	C1 A0	**Allow** *g* instead of value
	c		force = 1900 + 300 force = 2200 (N)	A1	**Allow** 1870 + 300 = 2170 (N)
	d		(distance =) 120 / sin 10° **or** 691 (m) (work done =) 2200 × 691 work done = 1.5 × 10^6 (J)	C1 C1 A1	**Allow** ECF from **(c)** **Allow** ECF from an incorrect attempt at first mark.
	e		(A =) π × 0.006^2 **or** 1.1 × 10^{-4} (m^2) (stress =) $\frac{2200}{\pi \times 0.006^2}$ <u>and</u> $2.0 \times 10^{11} = \frac{\text{stress}}{\text{strain}}$ x = 4.8 × 10^{-5} (m)	C1 C1 A1	**Allow** ECF from **(c)** **Allow** x (=FL/EA) = $\frac{2174 \times 0.5}{2.0 \times 10^{11} \times 1.1 \times 10^{-4}}$ **Allow** 2 marks for 1.2 × 10^{-5}; 1.2 × 10^{-2} m used as radius **Allow** answer between 4.7 and 5.1 × 10^{-5} (m)

© OCR 2022. You may photocopy this page.

Created in ExamBuilder

STEMUP.CO.UK

Question			Answer/Indicative content	Marks	Guidance
			Total	10	
47		i	The upthrust (on an object in a fluid) is equal to the <u>weight</u> of fluid (it displaces)	B1	**Note** 'fluid' or 'liquid' must be mentioned at least once. **Allow** a named fluid, e.g. water
		ii	($p = h\rho g$) $1.9 \times 10^3 = 0.15 \times \rho \times 9.81$ $\rho = 1.3 \times 10^3$ (kg m^{-3})	C1 A1	
			Total	3	

STEMUP.CO.UK

Question			Answer/Indicative content	Marks	Guidance
48	a	i	$F = QE = QV / d$ or $E = 5(.0) \times 10^4$ (Vm^{-1}) $F = 9.0 \times 10^{-9} \times 4000 / 8.0 \times 10^{-2}$ (= 4.5×10^{-4} N)	C1 A1	$F = 5.0 \times 10^4 \times 9.0 \times 10^{-9}$ <u>Examiner's Comments</u> Many lower ability candidates did not appreciate the uniform nature of the electric field between the plates and attempted to use Coulomb's Law.
		ii	weight; arrow vertically downwards tension; arrow upwards in direction of string electric (force); arrow horizontally to the <u>right</u> (not along dotted line)	B1 x 2	All correct, 2 marks; 2 correct, 1 mark 1 mark maximum if more than 3 arrows are drawn **Ignore** position of arrows **Allow** W **or** 0.030(N) (**not** gravity or g) **Allow** T **Allow** F **or** E or 4.5×10^{-4}(N) or electrostatic **Ignore** repulsion or attraction **Not** electric field / electric field strength / electromagnetic <u>Examiner's Comments</u> Most candidates scored a mark for showing the weight and tension forces accurately. Only a small proportion labelled the electric force arrow correctly and drew it as clearly perpendicular to the plates. **AfL** Do not use the word 'gravity' in place of 'weight'

STEMUP.CO.UK

Question			Answer/Indicative content	Marks	Guidance
		iii	$W x = F l$ 0.03 x = 4.5 x 10^{-4} x 120 **or** = 4.5 x 10^{-4} x 1.2 x = 1.8 cm **or** x = 0.018 m	M1 M1 A0	**Allow** any valid alternative approach e.g. M1 deflection angle θ = 1° M1 x = 120sinθ 1 mark for each side of the equation <u>Examiner's Comments</u> Although most candidates knew the principle of moments, many were unable to apply it correctly in this situation. More practice at this sort of question is recommended.
	b		Electric force/field (strength) increases Ball deflected further from vertical / moves to the right / touches negative plate Ball acquires the charge of the (negative) plate when it touches (Oscillates because) constantly repelled from (oppositely) charged plate	B1 B1 B1 B1	Must be clear which force is increasing Must have the idea of a repeating cycle <u>Examiner's Comments</u> The purpose of this question was to challenge the candidates to use their knowledge of electric fields in a novel practical situation. The word 'oscillate' confused many candidates, who tried to explain why the ball would perform simple harmonic motion.
	c		$I = Qf$ **or** $Q = It$ f = 3.2 x 10^{-8}/9.0 x 10^{-9} = 3.6 (Hz)	C1 A1	
			Total	12	

© OCR 2022. You may photocopy this page.

Created in ExamBuilder

STEMUP.CO.UK

Question			Answer/Indicative content	Marks	Guidance
49	a		There is no contact force between the astronaut and the (floor of the) space station (so no method of measuring / experiencing weight)	B1	**Allow** astronaut and the space station have same acceleration (towards Earth) / floor is falling (beneath astronaut) <u>Examiner's Comments</u> Misconception Experiencing weightlessness is not the same as being in freefall There was a lack of understanding of the nature of feeling weightless. The sensation of 'weightlessness' is a lack of the physiological sensation of 'weight'. The skeletal and muscular systems are no longer in a state of stress. This sensation is caused by a lack of contact forces as a result of the ISS and the astronaut experiencing the same acceleration. Common incorrect responses included: • the astronaut is weightless because he is falling • there is no resultant force on the astronaut • gravity is too weak to have any effect on the astronaut • the ISS orbits in a vacuum where there is no gravity.

© OCR 2022. You may photocopy this page.

Created in ExamBuilder

STEMUP.CO.UK

Question			Answer/Indicative content	Marks	Guidance
	b	i	M = 5.97 x 10^{24}(kg) **or** ISS orbital radius R = 6.78 x 10^6(m) **or** $g \propto 1/r^2$ (gr^2 = constant so) g x (6.78 x $10^6)^2$ = 9.81 x (6.37 x $10^6)^2$ g = 8.66 (N kg^{-1})	C1 C1 A1	**or** g (= GM/R^2) = 6.67 x 10^{-11} x 5.97 x 10^{24} / (6.78 x $10^6)^2$ **Allow** rounding of final answer to 2 SF i.e. 8.7 (N kg^{-1}) <u>Examiner's Comments</u> The simplest method here was to use the fact that g is inversely proportional to r^2, so gr^2 = constant. If this was not used, a value for the mass of the Sun had to be calculated, which introduced a further step. Candidates who omitted this calculation and used a memorised value of the Sun's mass instead were unable to gain full marks, because they invariably knew it to 1 s.f. only, whereas 3 were required. Errors occurred when candidates used the incorrect distance in the formula for g. Common errors included: • forgetting to square the radius • using the Earth's radius rather than the orbital radius of the satellite • calculating (6.37 × 10^6 + 4.1 × 10^5) incorrectly.
		ii	$2\pi r/T = v$ **or** T = 2 × 3.14 × 6.78 × 10^6 / 7.7 × 10^3 T = 5.5 × 10^3 s (= 92 min)	M1 A1	**ECF** incorrect value of R from **b(i)**

© OCR 2022. You may photocopy this page.

Created in ExamBuilder

STEMUP.CO.UK

Question			Answer/Indicative content	Marks	Guidance
	c		$\frac{1}{2}Mc^2$ ($\frac{1}{2}N_A mc^2$) $= \frac{3}{2}RT$ = c^2 = 3 × 8.31 × 293 / 2.9 × 10^{-2} = 2.52 × 10^5 $\sqrt{c^2}$ = 500 (m s^{-1}) (= 7.7 × 10^3 / 15)	C1 C1 A1 A0	or $\frac{1}{2}mc^2 = \frac{3}{2}kT$ or $c^2 = 3kT/m$ or c^2 = 3 ×1.38 x 10^{-23} × 6.02 x 10^{23} x 293/2.9 × 10^{-2} = 2.52 × 10^5 not (7.7 × 10^3 / 15) = 510 (m s^{-1}) Examiner's Comments The success in this question depended on understanding the meaning of the term *m* in the formula $\frac{1}{2}m\overline{c^2} = \frac{3}{2}kT$ given in the Data, Formulae and Relationship booklet. A significant number of candidates took *m* to be the mass of one mole (the molar mass, *M*) whereas *m* is actually the mass of one molecule. Candidates who used the formula $\frac{1}{2}M\overline{c^2} = \frac{3}{2}RT$ were usually more successful because the molar mass had been given in the question stem.
	d		power reaching cells (= *IA*) = 1.4 × 10^3 × 2500 = 3.5 × 10^6 W power absorbed = 0.07 × 3.5 × 10^6 = 2.45 × 10^5 W cells in Sun for (92 – 35 =) 57 minutes average power = 57/92 × 2.45 × 10^5 = 1.5 × 10^5 (W)	C1 C1 C1 A1	mark given for multiplication by 0.07 at any stage of calculation (90 – 35 =) 55 minutes using *T* = 90 minutes ECF value of *T* from **b(ii)** 55/90 × 2.45 × 10^5 = 1.5 × 10^5 (W) using *T* = 90 minutes Examiner's Comments Although this question looked daunting, it was actually quite linear and many candidates who attempted it were able to gain two or three marks even if they did not eventually get to the correct response. Candidates who set out their reasoning and working clearly were more liable to gain these compensatory marks.
			Total	13	

STEMUP.CO.UK

Question			Answer/Indicative content	Marks	Guidance
50			*F x 100 or 7.0 x 16* $F = \frac{7.0\ x\ 16}{100} = 1.1$ (N)	C1 A1	Ignore POT 1.12 Not 1.067
			Total	2	

STEMUP.CO.UK