OCR A-LEVEL PHYSICS A · H556

PHYSICS

EXAM QUESTION PACK

3.1 MOTION

SCORE	PERCENTAGE
/209	%

STEMUP

These questions belong to OCR, not to us.

The examination questions, mark schemes and examiner comments in this pack were written and published by OCR. They are past assessment materials, reproduced here so that students can revise from them.

What we do not own

STEMUP is not affiliated with OCR and does not own, and makes no claim to own, any of the question, mark scheme or examiner report material in this pack. OCR has not endorsed, approved or been involved in the production of it. OCR and the qualification titles used here belong to their respective owners and appear for identification only.

Where to find the originals

OCR publishes its past papers, mark schemes and examiner reports free of charge. Always check the current specification at ocr.org.uk before you revise, because content and wording can change between series.

If you hold the rights to any material in this pack and would like it amended or removed, contact admin@stemup.co.uk and we will act on it.

1 When a sandbag is dropped from a balloon hovering 1.3 m above the ground, it hits the ground at 5.0 ms^{-1}.
On another occasion, the sandbag is released from the balloon which is rising at 7.0 ms^{-1} when 1.3 m above the ground. There is also a crosswind of 5.0 m s^{-1}.

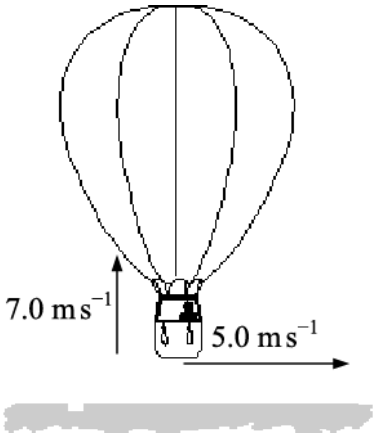

At what speed does the sandbag hit the ground?

A 2.0 ms^{-1}
B 5.4 ms^{-1}
C 10 ms^{-1}
D 13 ms^{-1}

Your answer

[1]

STEMUP.CO.UK

2(a) Two cars, **A** and **B**, are travelling clockwise at constant speeds around the track shown in **Fig. 16.1**.
The track consists of two straight parallel sections each of length 200 m, the ends being joined by semi-circular sections of diameter 80 m.
The speed of **A** is 20 ms^{-1} and that of **B** is 23 ms^{-1}.

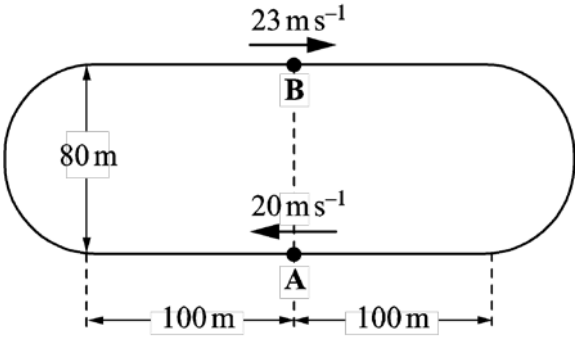

Fig. 16.1

(i) Calculate the time for **A** to complete one lap of the track.

time for one lap = _____ s **[2]**

(ii) Starting from the positions shown in **Fig. 16.1** determine the shorter of the two distances along the track between **A** and **B**, immediately after **A** has completed one lap.

STEMUP.CO.UK

distance = _____ m **[2]**

(b) Cars **A** and **B** are now on a straight road with car **A** moving at 22 ms^{-1} and car **B** at rest. As car **A** passes car **B**, car **B** accelerates from rest in the same direction at 1.5 ms^{-2} for 16 s. It then moves with constant velocity.

Fig. 16.2 shows the graph of velocity against time for car **A**. The time $t = 0$ is taken when the cars are alongside.

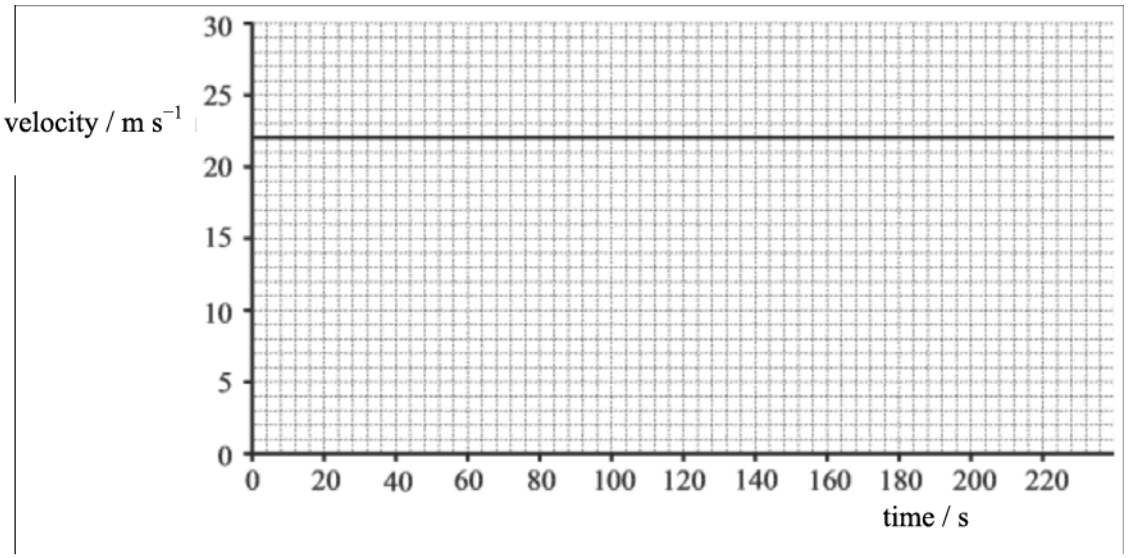

Fig. 16.2

(i) Sketch the graph of velocity against time for car **B** on **Fig. 16.2.** **[2]**

(ii) Determine the time taken for car **B** to be alongside car **A**.

STEMUP.CO.UK

time = _____ s **[3]**

3 An object is initially at rest. A constant force is applied to the object and it moves in a straight line with constant acceleration. After a time *t*, the object has displacement *s* and velocity *v.*

Which of the following will **not** produce a straight line graph?

A A graph of *v* against *t.*
B A graph of *s* against *v.*
C A graph of *s* against t^2.
D A graph of v^2 against *s.*

Your answer ☐

[1]

4 A car travels a distance 166 ± 2 m in a time 5.2 ± 0.1 s.

What is the best estimate of the speed of the car?

A 32 ± 1 m s^{-1}
B 32.0 ± 2.1 m s^{-1}
C 32.0 ± 0.2 m s^{-1}
D 32 ± 0.999 m s^{-1}

Your answer ☐

[1]

STEMUP.CO.UK

5 A ball is launched horizontally at 5 m s^{-1} from the end of a table. The ball is in flight for 0.4 s before it lands on the floor. The ball is now launched from the end of the same table with a horizontal velocity 10 m s^{-1}.

What is the new time of flight of the ball?

A 0.2 s
B 0.4 s
C 0.5 s
D 0.8 s

Your answer

[1]

STEMUP.CO.UK

6(a) Fig.16 shows typical thinking, braking and stopping distances for **cars** driven at different initial speeds. The speed is shown in miles per hour (mph).

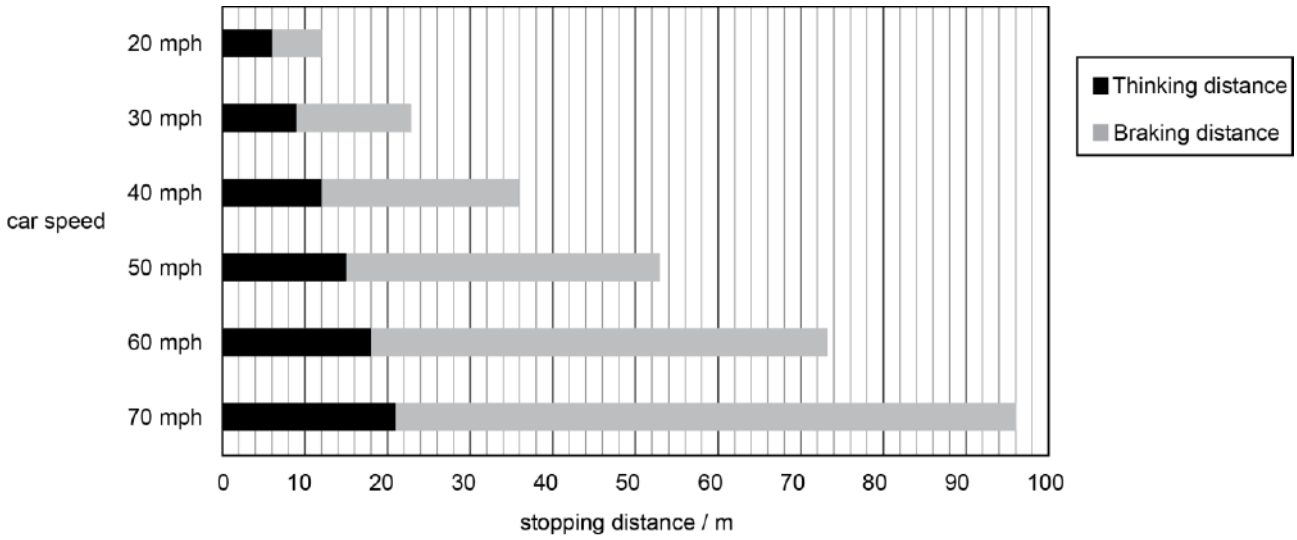

Fig. 16

State what is meant by *thinking distance* and state how it varies with initial speed of a car.

_____

_____

_____ **[2]**

(b) A **truck** of mass 2300 kg is travelling at a constant speed of 22 m s^{-1} along a dry, level road. The driver reacts to a hazard ahead and applies the brakes to stop the truck. The reaction time of the driver is 0.97 s. The brakes exert a constant braking force of 8700 N.

(i) Calculate the magnitude of the deceleration of the truck when braking.

deceleration = _____ m s^{-2} **[2]**

(ii) Show that the stopping distance of the truck is about 85 m.

STEMUP.CO.UK

[3]

(iii) Show that a speed of 22 m s^{-1} is equivalent to about 50 mph (miles per hour). 1 mile = 1600 m

[1]

(iv) Use Fig. 16 and your answer to (**ii**) to compare the stopping distance of the car and the truck at 50 mph. Suggest relevant factors that may have affected the stopping distance of the truck.

---

[4]

STEMUP.CO.UK

7(a) A cyclist moves along a horizontal road. She pushes on the pedals with a constant power of 250 W. The mass of the cyclist and bicycle is 85 kg. The total drag force is $0.4v^2$, where v is the speed of the cyclist.

The cyclist now moves up a slope at a constant speed of 6.0 ms^{-1} and continues to exert a power of 250 W on the pedals.

Fig. 17.1 represents the cyclist and bicycle as a single point **P** on the slope.

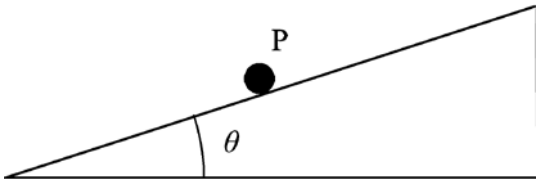

Fig. 17.1

(i) Draw arrows on **Fig. 17.1** to represent the forces acting on **P**. Label each arrow with the force it represents.

[1]

(ii) Calculate the angle θ of the slope to the horizontal.

θ = _____ ° **[2]**

STEMUP.CO.UK

(b) The cyclist continues to move up the slope at 6.0 ms^{-1} and approaches a gap of width 2.5 m as shown in **Fig. 17.2**.

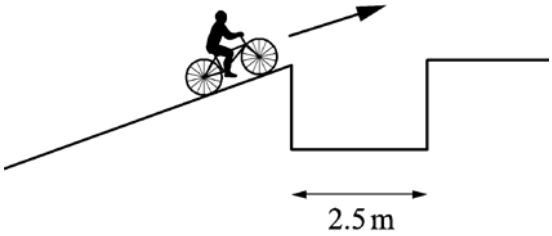

Fig. 17.2

A student has calculated that the cyclist will be able to clear the gap and land on the other side. Another student suggests that this calculation has assumed there is **no** drag and has not accounted for the effect caused by the front wheel losing contact with the slope before the rear wheel.

Without calculation, discuss how drag and the front wheel losing contact with the slope will affect the motion and explain how these might affect the size of the gap that can be crossed successfully.

---

[4]

STEMUP.CO.UK

8 While on the surface of the Moon an astronaut hits a golf ball with a club and declared that it went for ‘miles and miles’. The ball was given an initial velocity u at a fixed angle θ to the horizontal. Show that the horizontal distance travelled by the ball is directly proportional to u^2.

[3]

STEMUP.CO.UK

9 This question is about the operation of an electrically powered shower designed by an electrical firm.

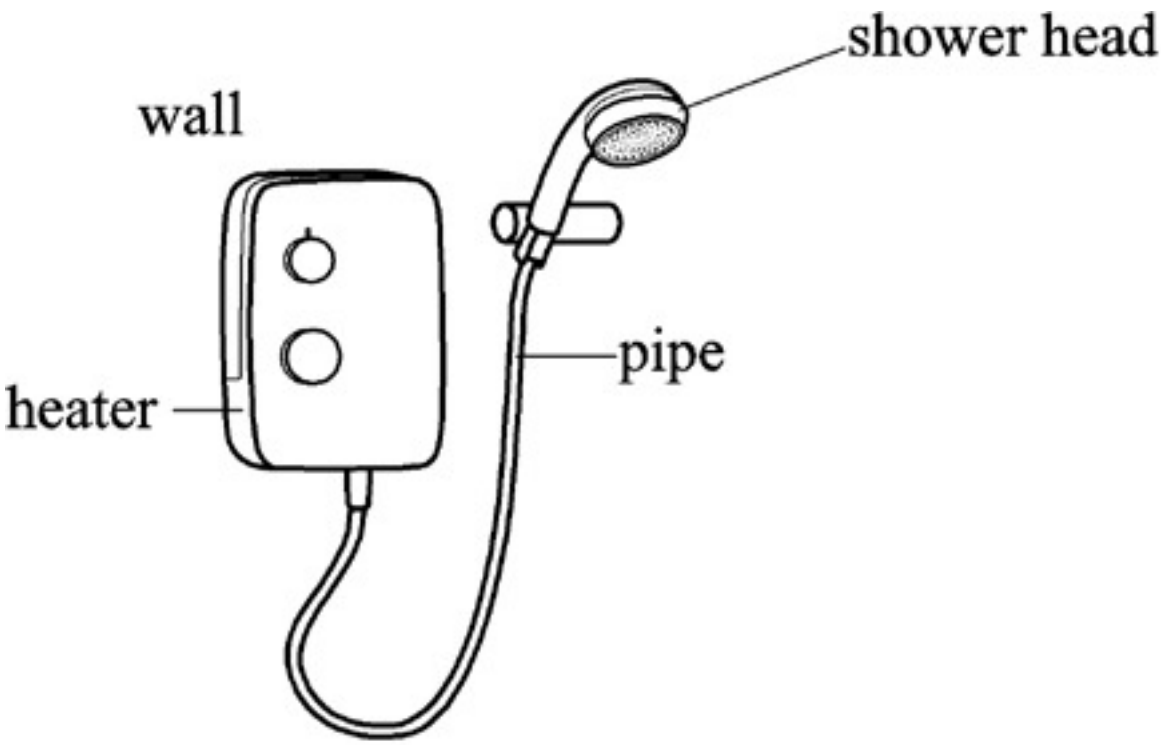

Fig.1.1

Water moves at constant speed through a pipe of cross-sectional area $7.5 \times 10^{?5}\ \mathrm{m}^2$ to a shower head shown in **Fig. 1.1.** The maximum mass of water which flows per second is 0.070 kg s^{-1}.

(i) Show that the maximum speed of the water in the pipe is about 0.9 m s^{-1}.

density of water = 1000 kg m^{-3}

[2]

(ii) The total cross-sectional area of the holes in the shower head is one quarter that of the pipe. Calculate the maximum speed of the water as it leaves the shower head.

© OCR 2022. You may photocopy this page.

Created in ExamBuilder

STEMUP.CO.UK

maximum speed = _____ m s^{-1} **[1]**

(iii) Calculate the magnitude of the force caused by the accelerating water on the shower head.

force = _____ N **[2]**

(iv) Draw on to **Fig. 1.1** the direction of the force in **(iii)**.

[1]

STEMUP.CO.UK

10(a) A motorcyclist riding on a level track is told to stop via a radio microphone in his helmet. The distance *d* travelled from this instant and the initial speed *v* are measured from a video recording.

Fig. 2.1

A student is investigating how the stopping distance of a motorcycle with high-performance brakes varies with the initial speed.

Explain why the student predicts that *v* and *d* are related by the equation

$$d = \frac{v^2}{2a} + vt$$

where *a* is the magnitude of the deceleration of the motorcycle and *t* is the thinking time of the rider.

[1]

(b) The student decides to plot a graph of $\frac{d}{v}$ on the *y-axis* against *v* on the *x*-axis.

Explain why this is a sensible decision.

---

[2]

STEMUP.CO.UK

(c) The measured values of v and d are given in the table.

v / m s^{-1}	d / m	$\frac{d}{v}$ / s
10 ± 1	13.0 ± 0.5	
15 ± 1	24.5 ± 0.5	1.63 ± 0.14
20 ± 1	39.5 ± 0.5	1.98 ± 0.12
25 ± 1	57.5 ± 0.5	2.30 ± 0.11
30 ± 1	79.0 ± 0.5	2.63 ± 0.10
35 ± 1	103.0 ± 0.5	2.94 ± 0.09

(i) Complete the missing value of $\frac{d}{v}$ in the table, including the absolute uncertainties. Use the data to complete the graph of **Fig. 2.2.** Four of the points have been plotted for you.

[2]

STEMUP.CO.UK

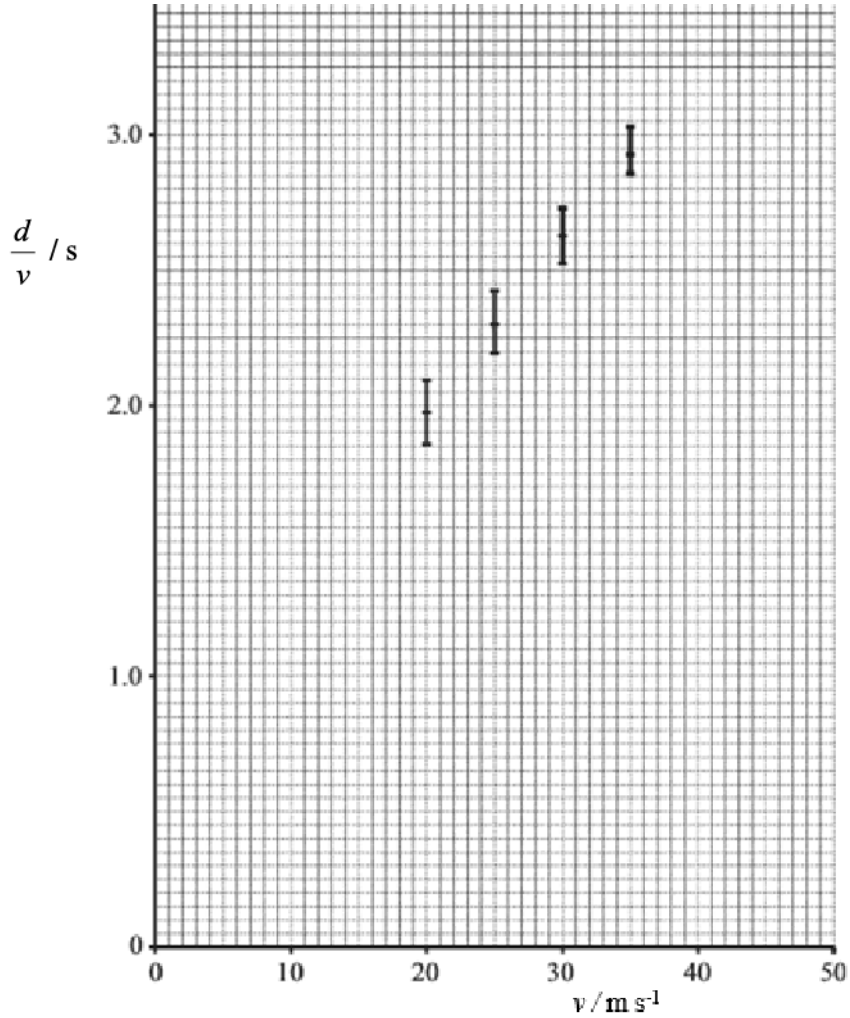

Fig. 2.2

(ii) Use **Fig. 2.2** to determine the values of *a* and *t*, including their absolute uncertainties.

a = _____ ± _____ m s^{-2}

t = _____ ± _____ s

[4]

STEMUP.CO.UK

(d) It was suspected that the method used to determine the distance *d* included a zero error. The distance recorded by the student was **larger** than it should have been.

Discuss how this would affect the actual value of *t* obtained in **(c)**.

---

[3]

11 A police speed detector gun works by firing short pulses of electromagnetic radiation, a time t_0 apart, at the front of the vehicle which is moving directly towards the gun. The reflected pulses are received at a time *t* apart. A digital readout on the top of the gun displays the speed of the vehicle.

In the space below, by considering how far the vehicle moves in time t_0, show that the speed of the vehicle is given by the expression

$$v = \frac{c(t_0 - t)}{2t_0}$$

where *c* is the speed of light.

[3]

STEMUP.CO.UK

12 Electrons in a beam are accelerated from rest by a potential difference V between two vertical plates before entering a uniform electric field of electric field strength E between two horizontal parallel plates, a distance $2d$ apart.

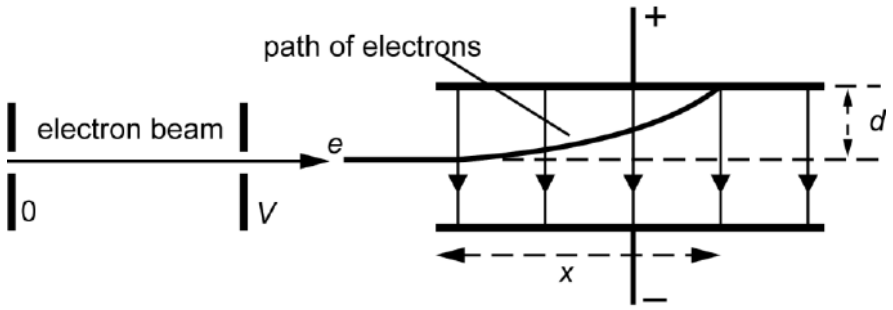

Fig. 2.1

The path of the electrons is shown in Fig. 2.1. The electron beam travels a horizontal distance x parallel to the plates before hitting the top plate. The beam has been deflected through a vertical distance d.

Show that x is related to V by the equation

$$x^2 = \frac{4\,d\,V.}{E}$$

[5]

STEMUP.CO.UK

13(a) A ball is held above level ground. It is then dropped from rest at time $t = 0$.

Fig. 1.1 shows the velocity v against time t graph for this ball bouncing vertically. Ignore the effect of air resistance.

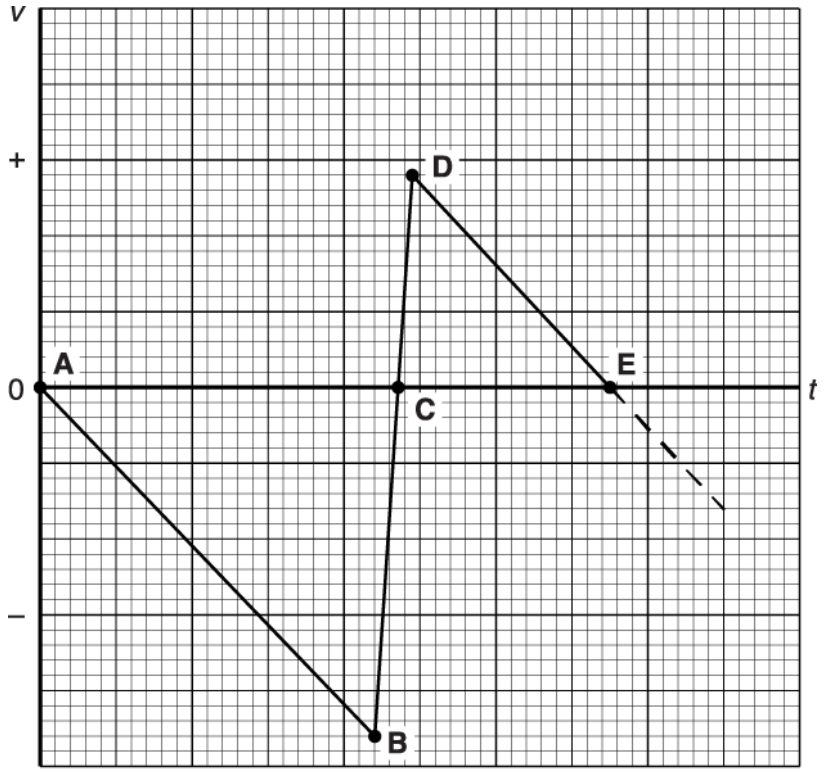

Fig. 1.1

(i) Explain why the gradient of the line **DE** is the same as the gradient of the line **AB**.

In your answer, you should use appropriate technical terms spelled correctly.

---

[1]

(ii) Explain why the area of triangle **ABC** is not the same as the area of triangle **CDE**.

---

[2]

STEMUP.CO.UK

(b) The ball, of mass 0.13 kg, was dropped from an initial height of 1.7 m. It remained in contact with the ground for 75 ms while experiencing a mean upward force of 16 N.

Calculate

(i) the speed of the ball immediately before impact with the ground

speed = _____ m s^{-1} **[1]**

(ii) the speed of the ball immediately at **D**

speed = _____ m s^{-1} **[2]**

(iii) the maximum height reached after the first bounce.

height = _____ m **[1]**

STEMUP.CO.UK

14 A ball is thrown vertically upwards with a speed of 5.0 m s^{-1}.
Ignore air resistance.

What is the maximum height reached by the ball?

A 0.3 m
B 0.8 m
C 1.3 m
D 2.5 m

Your answer

[1]

STEMUP.CO.UK

15(a) Fig. 16.1 shows an arrangement used by a group of students to determine the acceleration of free fall *g* in the laboratory.

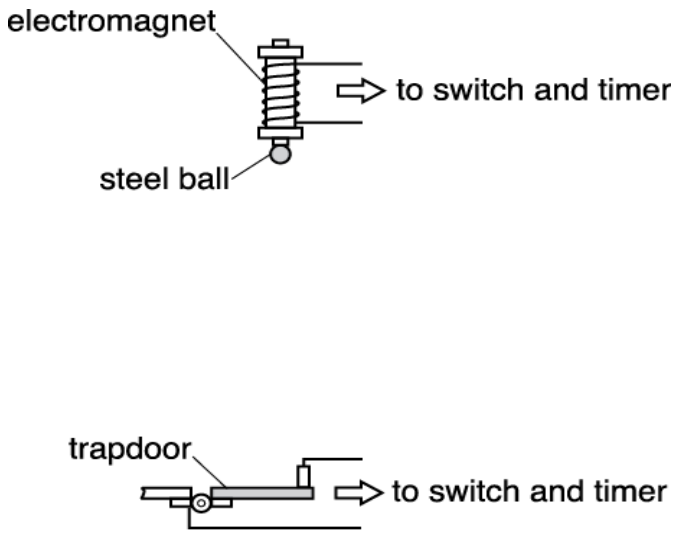

Fig. 16.1

An electromagnet is used to hold a small steel ball in position above a trapdoor. A timer starts as soon as the ball is released, and is stopped when the ball hits and opens the trapdoor. The clamp stands holding the trapdoor mechanism and the electromagnet are not shown in Fig. 16.1.

The distance between the bottom of the steel ball and the top of the trapdoor is 1.200 ± 0.001 m. The steel ball takes 0.50 ± 0.02 s to fall through this distance.

(i) Calculate a value for *g* using these results.

g = _____ m s^{-2} **[2]**

STEMUP.CO.UK

(ii) Determine the percentage uncertainty in the value for *g*.

percentage uncertainty = _____ % **[2]**

(b) State **one** source of error when timing the drop of the steel ball and describe how the percentage uncertainty in the measurement of time can be minimised.

_____

_____

_____ **[2]**

(c) *A group of students decide to determine the acceleration of free fall using the arrangement shown in Fig. 16.2.

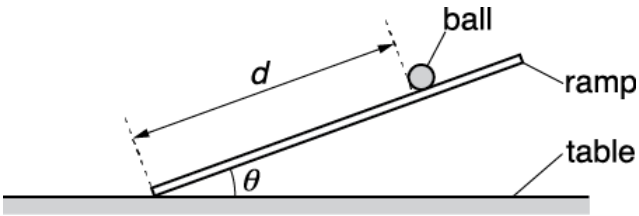

Fig. 16.2

The experiment uses a metal ball and a ramp.
The ball is at a distance *d* from the bottom of the ramp. The ramp makes an angle θ to the horizontal table. The ball is released from rest at time *t* = 0. The ball takes time *t* to travel the distance *d.*
The relationship between *d* and *t* is given by the equation

$$d = \frac{1}{2}(g\sin\theta)t^2.$$

Describe how you can conduct an experiment, and how the data can be analysed to determine the acceleration of free fall *g.*

_____

_____

_____

STEMUP.CO.UK

[6]

STEMUP.CO.UK

16(a) The ball-release mechanism of a pinball machine is shown in Fig. 17.1.

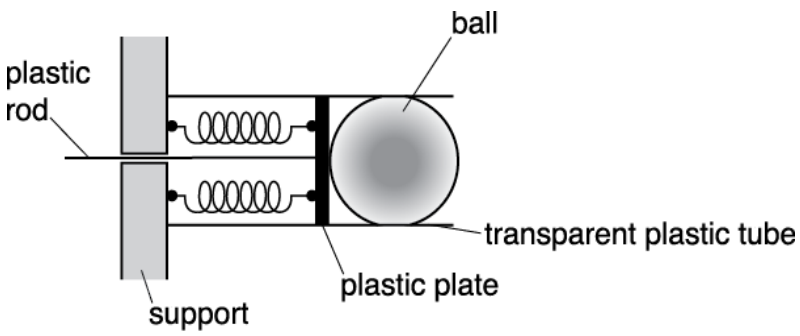

Fig. 17.1

A pair of identical compressible springs are fixed between a plastic plate and a support. The springs are in parallel. A plastic rod attached to the plate is pulled to the left to compress the springs. A ball, initially at rest, is fired when the plate is released.

A group of students are conducting an experiment to investigate the ball-release mechanism shown in Fig. 17.1. The students apply a force *F* and measure the compression *x* of the springs.
The table below shows the results.

F / N	*x* / cm
1.1 ± 0.2	2.0
2.0 ± 0.2	4.0
2.9 ± 0.2	6.0
4.0 ± 0.2	8.0
5.1 ± 0.2	10.0

Fig. 17.2 shows four data points from the table plotted on a *F* against *x* graph.

© OCR 2022. You may photocopy this page.

Created in ExamBuilder

STEMUP.CO.UK

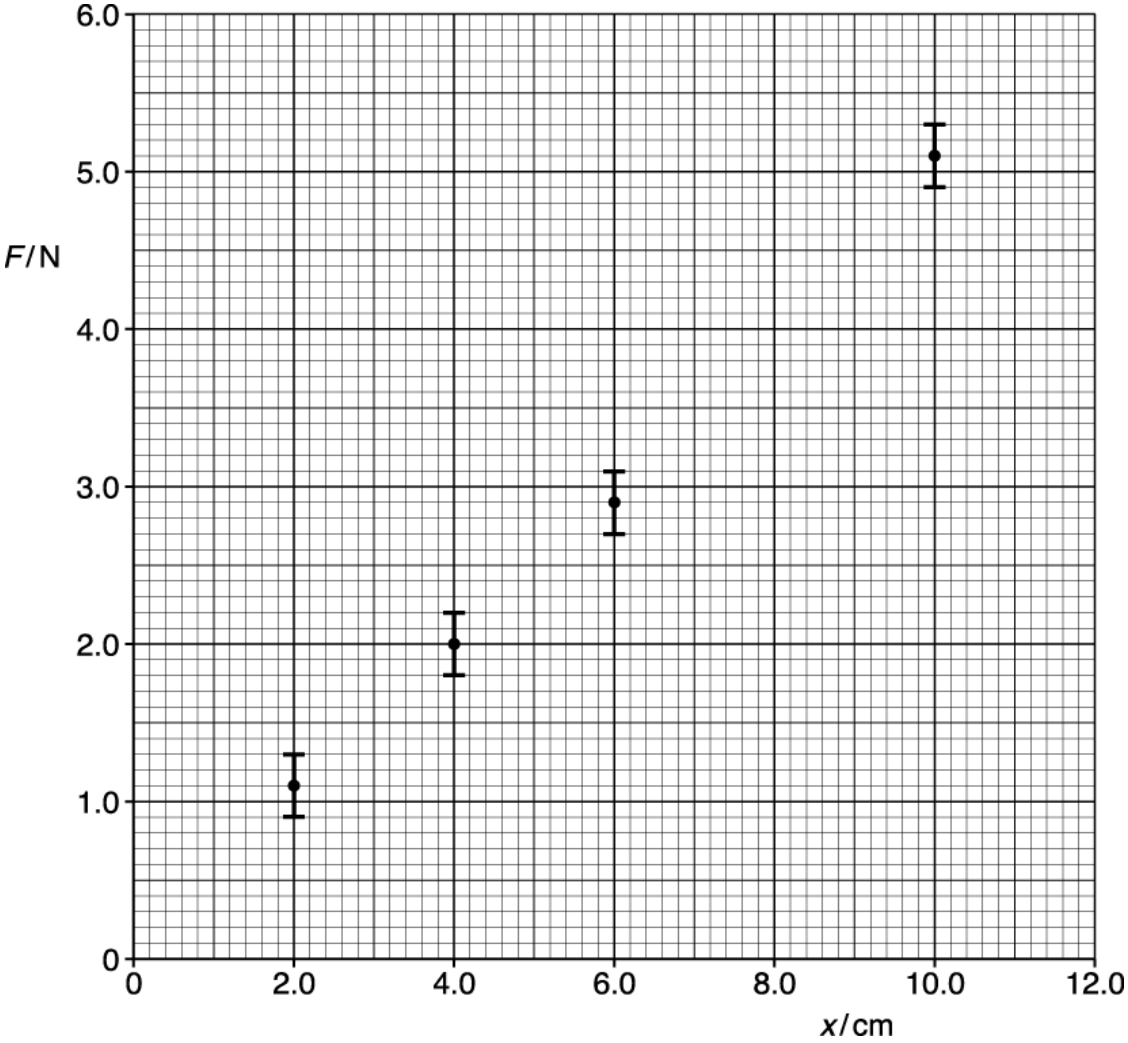

Fig. 17.2

(i) Plot the missing data point and the error bar on Fig. 17.2.

[1]

(ii) Describe how the data shown in the table may have been obtained in the laboratory.

---

[2]

(iii) Draw the best fit and the worst fit straight lines on Fig. 17.2.
Use the graph to determine the force constant k for a **single** spring and the absolute uncertainty in this value.

STEMUP.CO.UK

k = _____ ± _____ N m^{-1} **[4]**

(iv) State the feature of the graph that shows Hooke's law is obeyed by the springs.

_____

_____ **[1]**

(v) The mass of the ball is 0.39 kg.

Use your answer from **(iii)** to calculate the launch speed v of the ball when the plastic plate shown in Fig. 17.1 is pulled back 12.0 cm.

v = _____ m s^{-1} **[3]**

STEMUP.CO.UK

(b) A new arrangement for the ball-release mechanism using three identical springs is shown in Fig. 17.3.

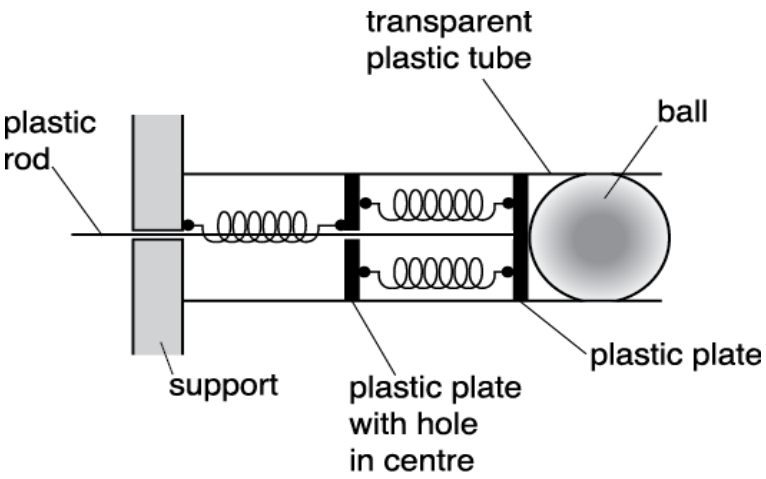

Fig. 17.3

The force constant of each spring is k.
The same ball of mass 0.39 kg is used. The plastic rod is pulled to the left by a distance of x.

Show that initial acceleration a of this ball is given by the equation

$$a = 1.7\,kx.$$

[2]

STEMUP.CO.UK

17 A **proton** travels from point **P** to point **Q** in a uniform electric field as shown in Fig. 21.2.

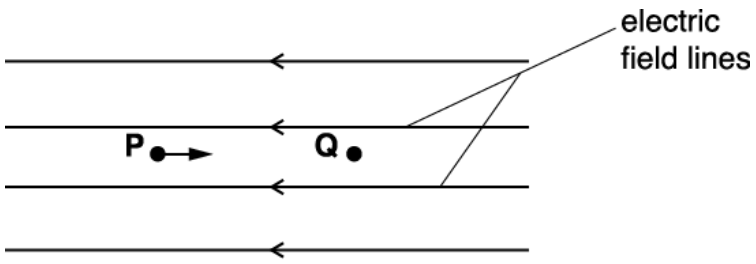

Fig. 21.2

The velocity of the proton at **P** is 7.2×10^6 m s^{-1} and the velocity at **Q** is 2.4×10^6 m s^{-1}. The distance between **P** and **Q** is 1.2 cm.

Calculate

(i) the magnitude of the deceleration of the proton

deceleration = _____ m s^{-2} **[2]**

(ii) the electric field strength *E*.

E = _____ N C^{-1} **[2]**

STEMUP.CO.UK

18 The braking distance of a car is directly proportional to its initial kinetic energy.

The braking distance of a car is 18 m when its initial speed is 10 m s^{-1}.

What is the braking distance of the car, under the same conditions, when its initial speed is 25 ms^{-1}?

A 7.2 m

B 45 m

C 113 m

D 222 m

Your answer ☐ **[1]**

STEMUP.CO.UK

19 A ball is dropped from rest above the ground. Air resistance has negligible effect on the motion of the ball.

The speed of the ball is v after it has fallen a distance h from its point of release.

Which graph is correct for this falling ball?

A

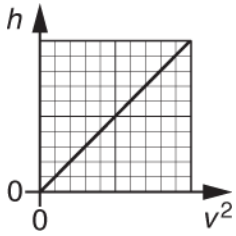

B

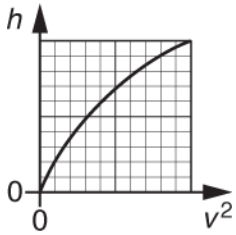

C

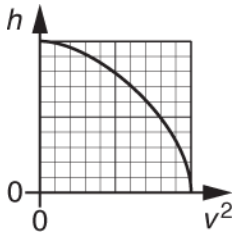

D

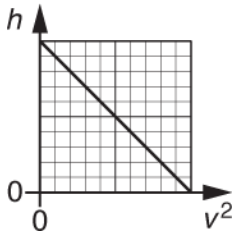

Your answer [1]

STEMUP.CO.UK

20 An object above the ground is released from rest at time $t = 0$.

Air resistance is negligible.

What is the distance travelled by the object between $t = 0.20$ s and $t = 0.30$ s?

A 0.20 m

B 0.25 m

C 0.44 m

D 0.49 m

Your answer [ ] **[1]**

STEMUP.CO.UK

21(a) This question is about the motion of a ball suspended by an elastic string above a bench. The mass of the string is negligible compared to that of the ball. Ignore air resistance.

Fig. 6.1

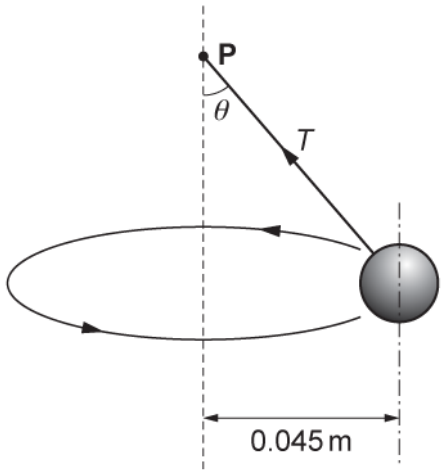

Fig. 6.2 (not to scale)

In Fig. 6.1 the ball of weight 1.2 N hangs vertically at rest from a point **P**. The extension of the string is 0.050 m. The string obeys Hooke's law.

In Fig. 6.2 the ball is moving in a horizontal circle of radius 0.045 m around a vertical axis through **P** with a period of 0.67 s. The string is at an angle θ to the vertical. The tension in the string is T.

On Fig. 6.2 draw and label one other force acting on the ball. **[1]**

STEMUP.CO.UK

(b)

(i) Resolve the tension T horizontally and vertically and show that the angle θ is 22°.

[2]

(ii) Calculate the extension x of the string shown in Fig. 6.2.

x = _____ m **[3]**

STEMUP.CO.UK

(c) Whilst rotating in the horizontal plane the ball suddenly becomes detached from the string. The bottom of the ball is 0.18 m above the bench at this instant. The ball falls as a projectile towards the bench beneath. Fig. 6.3 shows the view from above.

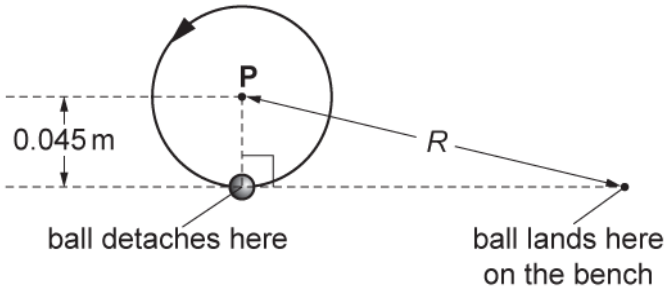

Fig. 6.3

Calculate the horizontal distance *R* from the point on the bench vertically below the point **P** to the point where the ball lands on the bench.

R = _____ m **[4]**

STEMUP.CO.UK

(d) Returning to the situation shown in Fig. 6.2, state and explain what happens when the rate of rotation of the ball is increased.

---[2]

STEMUP.CO.UK

22 A swimming pool designer investigates the depth *d* below a water surface reached by a diver when diving from a height *h* above the water surface.

The designer models the diver as a uniform wooden cylinder.

The experimental arrangement is shown in Fig. 18.1.

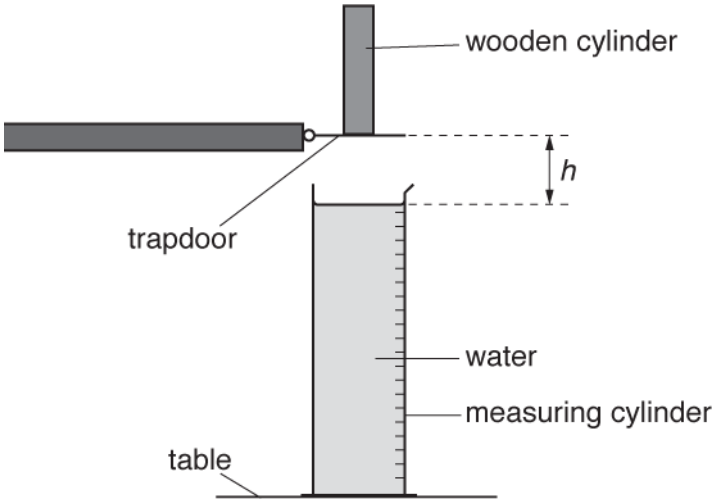

Fig. 18.1

The cylinder is released from **rest** from a trapdoor. The base of the cylinder is at a height *h* = 0.30 m above the water surface.

Calculate the speed of the cylinder just before the base hits the water. Ignore air resistance.

speed = _____ m s^{-1} **[2]**

STEMUP.CO.UK

23(a) Fig. 16 shows a hydraulic jack used to lift a car which has a mass of 1200 kg. A mechanic exerts a downwards force of 400 N on the handle of the jack, moving it 80.0 cm downwards. As he moves the handle, the car rises 2.0 cm.

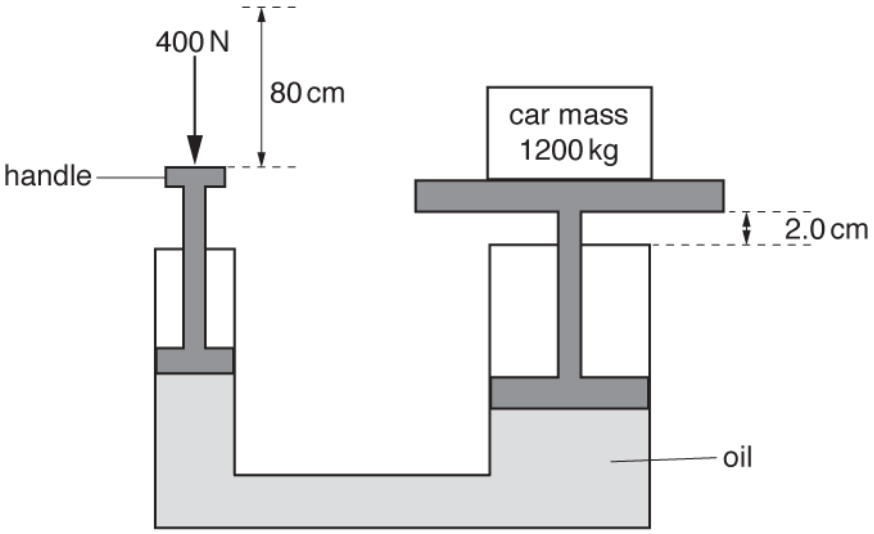

Fig. 16

Calculate the work done by the 400 N force exerted by the mechanic.

work done = _____ J [2]

STEMUP.CO.UK

(b) Calculate the ratio

$$\frac{\text{speed of handle moving down}}{\text{speed of car moving up}}.$$

ratio = _____ **[2]**

(c) Calculate the useful work done on the car and hence the percentage efficiency of the jack.

efficiency = _____ % **[2]**

STEMUP.CO.UK

24 An object is dropped from rest at time $t = 0$. It falls vertically through the air.
The variation of the velocity v with time t is shown below.

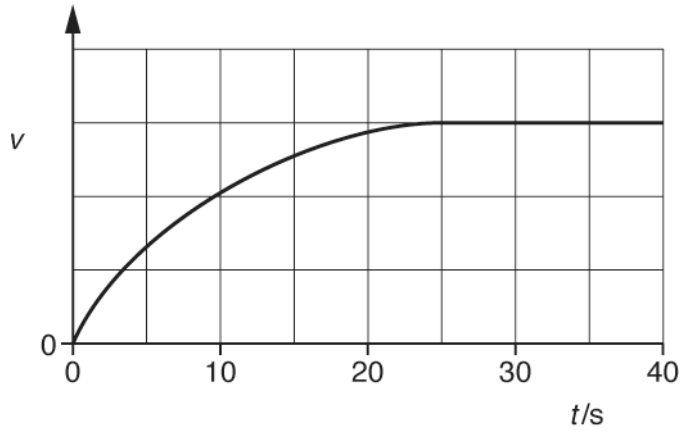

Which statement is correct about this object?

A It has constant acceleration.
B It experiences zero drag at $t = 30$ s.
C It has an acceleration of 9.81 m s^{-2} at $t = 0$ s.
D It travels the same distance in every successive 10 s.

Your answer [1]

STEMUP.CO.UK

25(a)

A tennis ball is struck with a racket.

The initial velocity v of the ball leaving the racket is 30.0 m s^{-1} and it makes an angle of 70° to the horizontal as shown in Fig. 16.

Air resistance is negligible

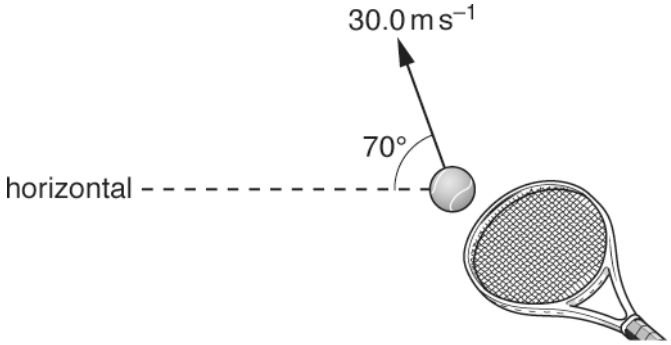

Fig. 16

(i) Calculate the vertical component of the initial velocity of the ball.

vertical component =----------m s^{-1} [1]

(ii) Use your answer in (i) to show that the ball reaches a maximum height *h* of about 40 m.

h =---------- m [2]

STEMUP.CO.UK

(iii) Explain why the kinetic energy of the ball is not zero at maximum height.

---

[1]

(iv) The mass m of the ball is 57.0 g.
Calculate the kinetic energy E_k of the ball when it is at its maximum height.

E_k = ---------- J [2]

(b) A metal ball is rolled off the edge of a horizontal laboratory bench. The initial horizontal velocity of the ball is v. The ball travels a horizontal distance x before it hits the level floor.

Use your knowledge of projectile motion to suggest the relationship between v and x. Describe how an experiment can be safely conducted to test this relationship and how the data can be analysed.

STEMUP.CO.UK

[6]

STEMUP.CO.UK

26

Fig. 20.1 shows an electric motor used to lift and lower a load.

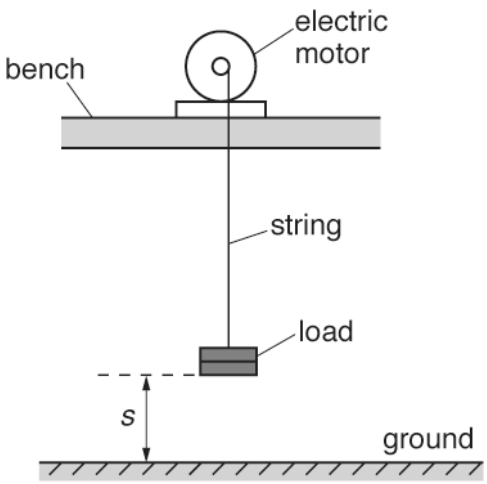

Fig. 20.1

At time $t = 0$ the load is on the ground with displacement $s = 0$.

Fig. 20.2 shows the variation of the displacement s of the load with time t.

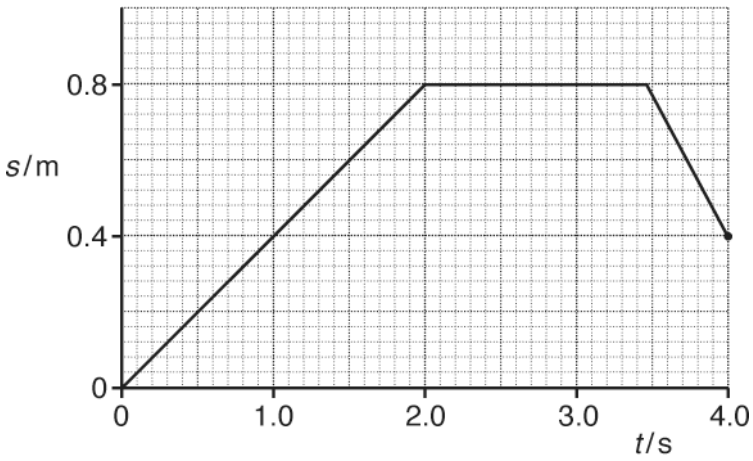

Fig. 20.2

STEMUP.CO.UK

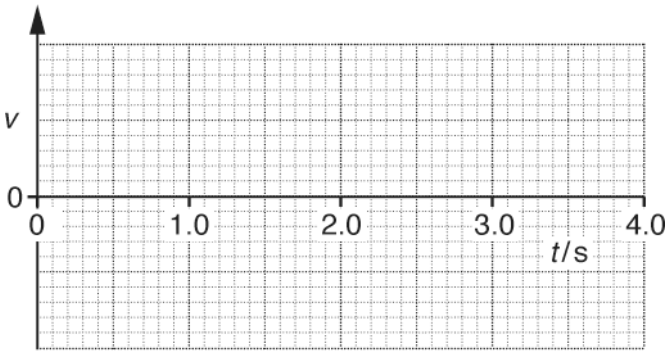

Fig. 20.3

(i) On Fig. 20.3, sketch a graph to show the variation of the velocity v of the load with time *t*.
You do not need to insert a scale on the *v* axis. **[3]**

(ii) Describe how the kinetic energy and the gravitational potential energy of the load varies from $t = 0$ to $t = 2.0$ s.

---**[2]**

(iii) During the **downward** journey of the load, the string breaks at $t = 4.0$ s. It then falls vertically towards the ground. The mass of the load is 120 g.
Air resistance is negligible.

1 Calculate the velocity *V* of the load just before it hits the ground.

V =----------ms^{-1} **[2]**

2 The load hits the ground and comes to **rest** in a time interval of 25 ms.

STEMUP.CO.UK

Calculate the average force F exerted by the ground on the load.

F = _____ N **[2]**

STEMUP.CO.UK

27(a) Fig. 4.1 shows an arrangement used by a student to determine the acceleration of free fall.

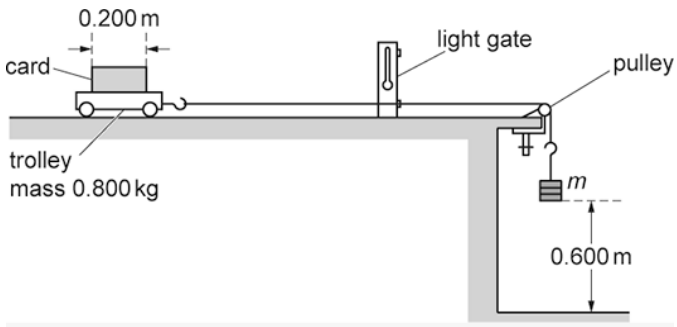

Fig. 4.1

A trolley is attached to a variable mass *m* by a string which passes over a pulley.

The mass *m* is released from rest and falls through a fixed height of 0.600 m accelerating the trolley of mass 0.800 kg. When the mass *m* hits the floor, the trolley then continues to move at a **constant** velocity *v*.

This constant velocity *v* is determined by measuring the time *t* for the card of length 0.200 m to pass fully through a light gate connected to a timer.

Frictional forces on the trolley and the falling mass *m* are negligible.

Show that the relationship between *v* and *m* is

$$v^2 = \frac{1.20mg}{(m + 0.800)}$$

where *g* is the acceleration of free fall.

[2]

STEMUP.CO.UK

STEMUP.CO.UK

(b) The student records the information from the experiment in a table. The column headings and just the last row for m = 0.600 kg from this table are shown below.

m/kg	t/10^{-3} s	$\frac{m}{(m+0.800)}$	v/m s^{-1}	v^2/m^2 s^{-2}
0.600	90 ± 2	0.429	2.22 ± 0.05	

(i) Complete the missing value of v^2 in the table including the absolute uncertainty. **[2]**

(ii) Fig. 4.2 shows some of the data points plotted by the student. Plot the missing data for m = 0.600 kg on Fig. 4.2 and draw the straight line of best fit.

[2]

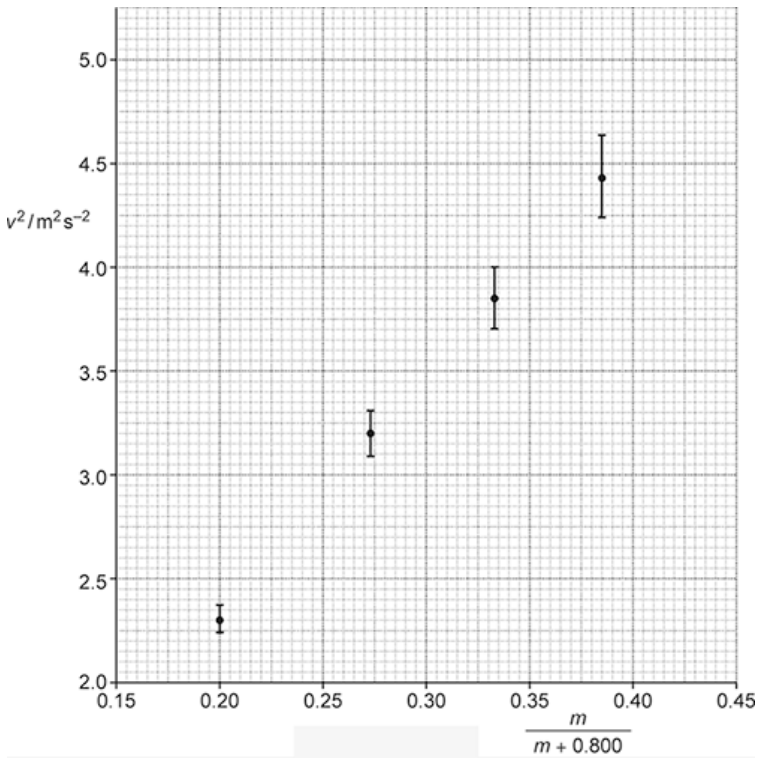

Fig. 4.2

STEMUP.CO.UK

(c)

(i) Use the equation given in **(a)** to show that the gradient of the graph of v^2 against $\frac{m}{(m+0.800)}$ is equal to 1.20 g.

[1]

(ii) Assume that the best-fit straight line through the data points gives 9.5 m s^{-2} for the experimental value of g. Draw a worst-fit line through the data points on Fig. 4.2 and determine the absolute uncertainty in the value for g.

absolute uncertainty = ±---------- ms^{-2} **[4]**

STEMUP.CO.UK

(d) It is suspected that the card on the trolley did not pass at right angles through the light beam.

Discuss, without doing any calculations, the effect this may have on the experimental value for the acceleration of free fall *g*.

---

[4]

STEMUP.CO.UK

28 A toy rocket is made from a 1.5 litre plastic bottle with fins attached for stability.

The bottle initially contains 0.30 litres of water, leaving 1.2 litres of trapped air at a temperature of 17 °C.
A pump is used to increase the pressure of the air within the plastic bottle to 2.4×10^5 Pa at the start of lift-off.

Fig. 1.1 shows the rocket at the start of lift-off.

1 litre = 10^{-3} m^3

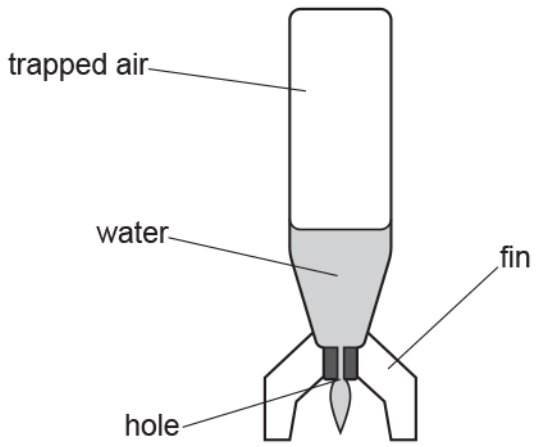

Fig. 2.1

Discuss whether adding more water initially would enable the rocket to reach a greater height.

STEMUP.CO.UK

[3]

29 A car is dripping oil at a steady rate on a straight road.
The road is divided into four sections **A**, **B**, **C**, and **D**.

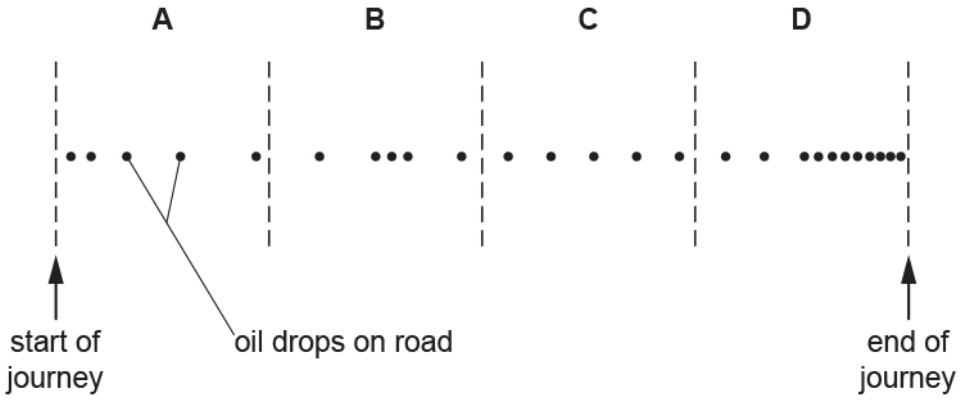

Which section of the road shows the car travelling at a constant speed?

Your answer ☐ [1]

STEMUP.CO.UK

30 A student uses a motion-sensor connected to a laptop to investigate the motion of a hollow ball of mass 1.2×10^{-2} kg falling through air.

The ball is dropped from rest. It reaches terminal velocity before it reaches the ground.

The upthrust on the ball is negligible.

Fig. 17 shows the variation with time t of the velocity v of the ball as it falls towards the ground.

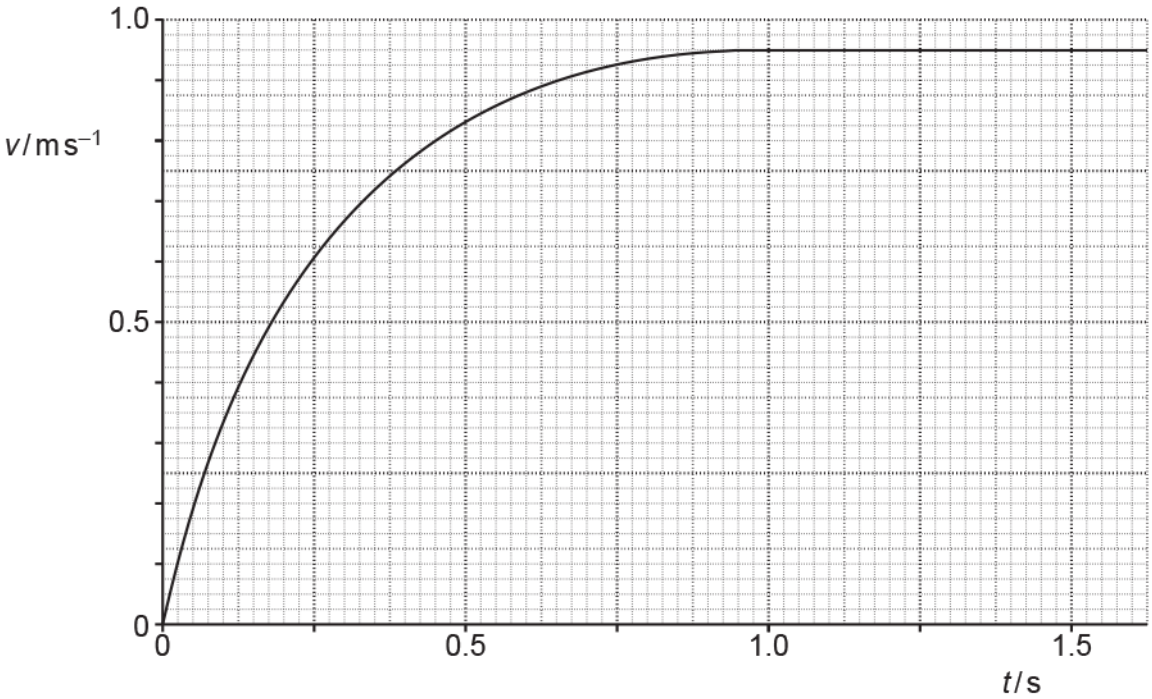

Fig. 17

Draw a tangent to the curve at $t = 0.25$ s and determine the acceleration of the ball.

acceleration = ... m s^{-2} **[3]**

STEMUP.CO.UK

31(a) A car is travelling along a straight road at 18 m s^{-1}.

The driver sees an obstacle and after 0.50 s applies the brakes.

The **stopping** distance of the car is 38 m.

Calculate the magnitude of the deceleration of the car when the brakes are applied.

deceleration = ... m s^{-2} **[3]**

(b) * A student rolls a marble at different speeds on a carpet to model the braking of a car.

The student wishes to investigate how the total distance x travelled before the marble stops (braking distance) depends on its initial speed *v*.

The speed *v* and distance *x* are related by the equation $\frac{1}{2}mv^2 = Fx$ where m is the mass of the marble and *F* is the constant frictional force acting on the marble.

- Describe how an experiment can be conducted in the laboratory to investigate the relationship between *v* and *x*.
- Explain how the data can be analysed to determine *F*.

STEMUP.CO.UK

[6]

STEMUP.CO.UK

32(a) A bicycle manufacturer carries out tests on the braking system of their new model.

A cyclist on this new bicycle travels at a constant initial speed U.

The cyclist applies the brakes at time $t = 0$ and the bicycle comes to a stop at time $t = 2.0$ s.

Fig. 20.1 shows the variation of the braking force F on the bicycle with time t.

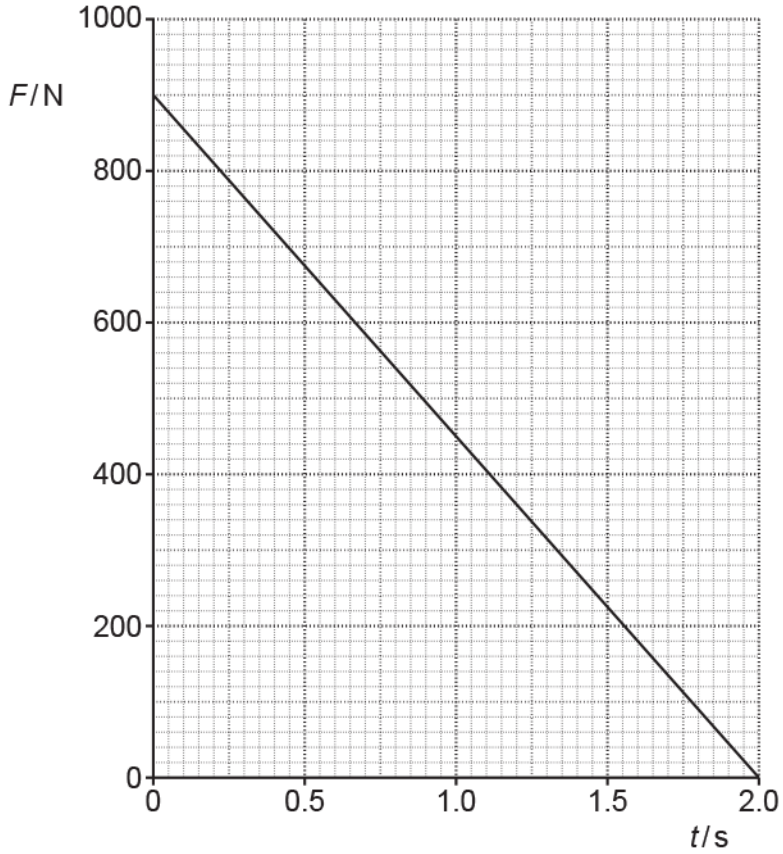

Fig. 20.1

The total mass of cyclist and bicycle is 71 kg.

Use Fig. 20.1 to calculate the initial speed U.

U = ... m s^{-1} **[2]**

STEMUP.CO.UK

(b) Complete Fig. 20.2 to show the variation of the speed of the bicycle from $t = 0$ to $t = 2.0$ s.

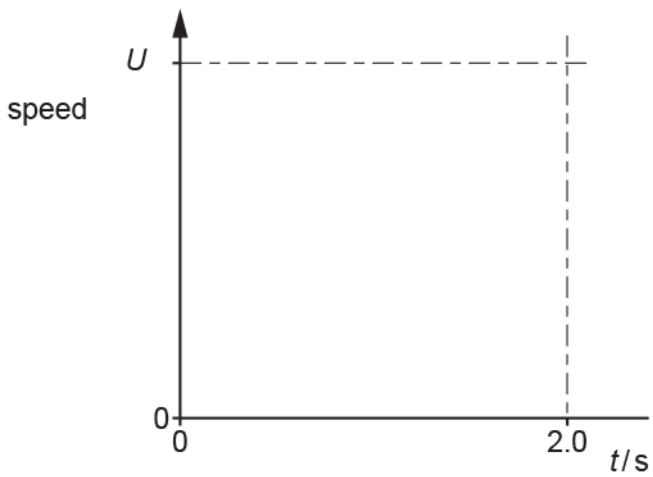

Fig. 20.2

[2]

33 A tennis ball is hit with a racket. The force applied by the racket on the ball is *F*. The ball has a vertical path through the air.

Which statement is correct when the ball is at its **maximum** height?

A The ball has a downward acceleration.
B The force acting on the ball is *F*.
C The ball experiences greatest drag.
D The weight of the ball is equal to the drag.

Your answer [1]

STEMUP.CO.UK

34 The velocity v against time t graphs for four objects **A** , **B** , **C** and **D** are shown below.

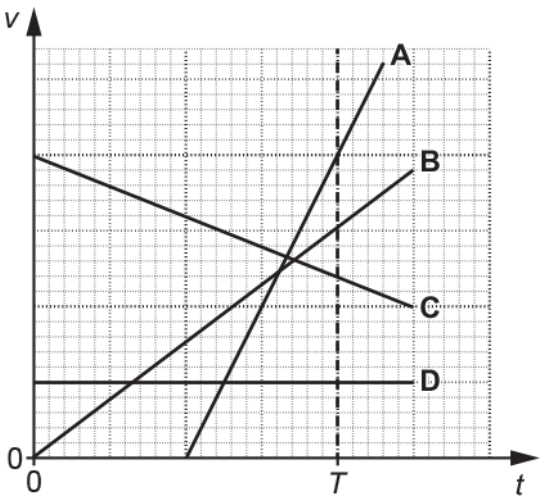

Which object travels the greatest distance between $t = 0$ and $t = T$?

Your answer ☐ **[1]**

STEMUP.CO.UK

35 * A student makes a pendulum using a length of string with a ball of adhesive putty which acts as a bob. The mass of this bob is *M*.
A similar second pendulum is constructed with the same length of string but with a bob of a smaller mass. The mass of this bob is *m*.

The arrangement of the pendulums is shown below.

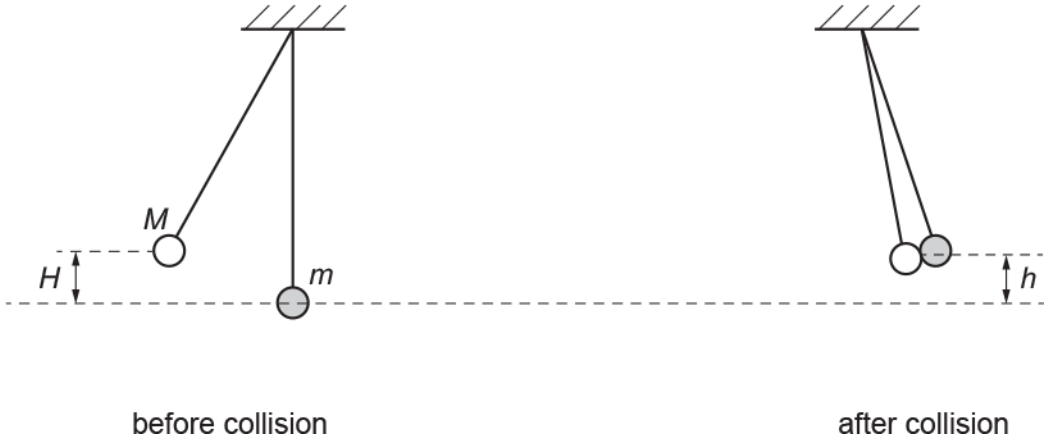

The bob of mass *M* is pulled back to a vertical height of *H* from its rest position. It is released and collides with the bob of mass *m*. The two bobs then stick together and reach a maximum vertical height *h* from the rest position.

The height *h* is given by the equation $h = \left(\frac{M}{M+m}\right)^2 H$.

Describe how to perform an experiment to test the validity of this equation and how the data can be analysed.

STEMUP.CO.UK

[6]

STEMUP.CO.UK

36(a) An archer fires an arrow towards a target as shown below.

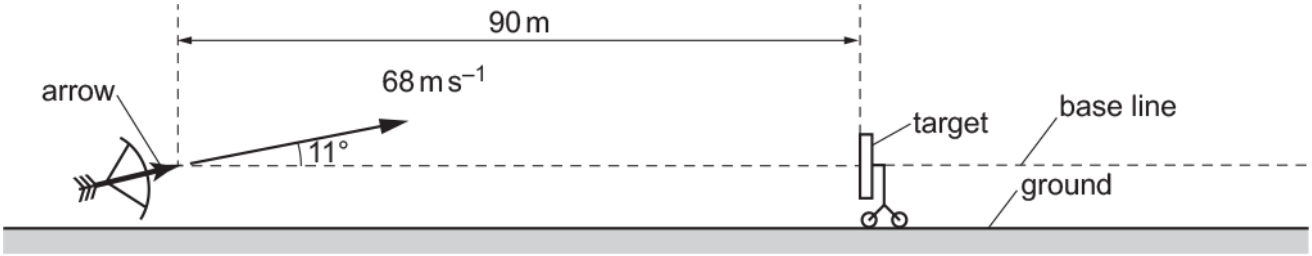

The diagram is **not** drawn to scale.

The centre of the target is at the same height as the initial position of the arrow.
The target is a distance of 90 m from the arrow.
The arrow has an initial velocity of 68 m s^{-1} and is fired at an angle of 11° to the horizontal.

Air resistance has negligible effect on the motion of the arrow.

Describe how the kinetic energy of the arrow changes during its journey from when it is fired until it reaches its maximum height.

---

[2]

(b) Show that the time taken for the arrow to reach its maximum height is about 1.3 s.

[2]

STEMUP.CO.UK

(c) The arrow misses the target.

Calculate the horizontal distance, measured along the base line, by which the arrow misses the target.

horizontal distance = ... m **[3]**

STEMUP.CO.UK

(d) The arrow is now fired horizontally at 68 m s^{-1} into the target at very close range.

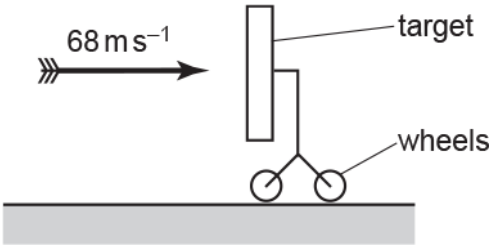

The arrow sticks into the target. The collision between the arrow and the target is inelastic.

(i) Explain what is meant by an **inelastic collision** .

---

[1]

(ii) The target is mounted on wheels. The target has a much larger mass than the mass of the arrow.

Using ideas of momentum, explain the velocity of the target immediately after the arrow sticks into the target.

---

[2]

STEMUP.CO.UK

37(a) The International Space Station (ISS) orbits the Earth at a height of 4.1×10^5 m **above** the Earth's surface.

The radius of the Earth is 6.37×10^6 m. The gravitational field strength g_0 at the Earth's surface is 9.81 N kg^{-1}.

Both the ISS and the astronauts inside it are in free fall.

Explain why this makes the astronauts feel **weightless**.

---

[1]

(b)

(i) Calculate the value of the gravitational field strength g at the height of the ISS above the Earth.

g = ... N kg^{-1} **[3]**

(ii) The speed of the ISS in its orbit is 7.7 km s^{-1}. Show that the period of the ISS in its orbit is about 90 minutes.

[2]

STEMUP.CO.UK

(c) Use the information in **(b)(ii)** and the data below to show that the root mean square (r.m.s.) speed of the air molecules inside the ISS is approximately 15 times smaller than the orbital speed of the ISS.

- molar mass of air = 2.9×10^{-2} kg mol^{-1}
- temperature of air inside the ISS = 20 °C

[3]

STEMUP.CO.UK

(d) The ISS has arrays of solar cells on its wings. These solar cells charge batteries which power the ISS. The wings always face the Sun.

Use the data below and your answer to **(b)(ii)** to calculate the **average** power delivered to the batteries.

- The total area of the cells facing the solar radiation is 2500 m^2.
- 7% of the energy of the sunlight incident on the cells is stored in the batteries.
- The intensity of solar radiation at the orbit of the ISS is 1.4 kW m^{-2} outside of the Earth's shadow and zero inside it.
- The ISS passes through the Earth's shadow for 35 minutes during each orbit.

average power = ... W **[4]**

END OF QUESTION PAPER

STEMUP.CO.UK

Question			Answer/Indicative content	Marks	Guidance
1			C	1	
			Total	1	
2	a	i	Circumference = (2 × 200) + (2π × 40) = 651.3 m	C1	
		i	Time for A to complete one lap = $\frac{651.3}{20}$ = 33 (s)	A1	accept 32.6
		ii	Distance moved by B = 23 × 32.6 = 749.8 m	C1	Accept calculation of relative speed followed by relative distance.
		ii	(B leads A by) 749.8 – 651.3 = 98.5 (m)	A1	accept 108 m for 33 s
	b	i	Constant acceleration from 0 shown correctly followed by constant velocity.	B1	
		i	Constant velocity at 24 ms^{-1} starting at t = 16 s	B1	
		ii			Alternative method of equating areas.
		ii	Distance moved by B = (1/2 × 1.5 × 16^2) + 24(t – 16)	C1	Distance moved by B = (8 × 24) + (24(t – 16))
		ii	(1/2 × 1.5 × 16^2) + 24(t – 16) = 22t	C1	22t = (8 × 24) + 24(t – 16)
		ii	t = 96 (s)	A1	t = 96
			Total	9	
3			B	1	
			Total	1	
4			A	1	
			Total	1	
5			B	1	
			Total	1	

© OCR 2022. You may photocopy this page.

Created in ExamBuilder

STEMUP.CO.UK

Question			Answer/Indicative content	Marks	Guidance
6	a		Distance travelled from the moment the driver sees a hazard until the brakes are applied	B1	
			Distance proportional to speed (for constant thinking time)	B1	
	b	i	$a = F / m$ / $a = 8700 / 2300$	C1	
		i	$a = 3.8$	A1	**Note** answer is 3.78 to 3 s.f.
		ii	$D_{thinking} = u \times t = 22 \times 0.97 = 21.3$ (m)	C1	Allow 21.34
		ii	$D_{braking} = u^2 / 2a$ or $22^2 / (2 \times 3.8) = 64.0$ (m)	C1	Allow 63.98
		ii	stopping distance = $D_{thinking} + D_{braking}$ or 21.3 + 64.0	C1	Allow ecf
		ii	stopping distance = 85.3 (m)	A0	Allow 85.32
		iii	22 × 3600 / 1600 (= 49.5 mph)	B1	
		iv	Thinking distance for truck longer than in chart	B1	
		iv	Suggested reason e.g. tired	B1	Allow any relevant factor
		iv	Braking distance for truck longer than in chart	B1	
		iv	Suggested reason e.g. truck more massive than a car, truck's brakes are poor quality	B1	Ignore reference to road conditions
			Total	12	

© OCR 2022. You may photocopy this page.

Created in ExamBuilder

STEMUP.CO.UK

Question			Answer/Indicative content	Marks	Guidance
7	a	i	weight; (tractive) force up slope; drag; (normal) reaction		
		i		B1	
		i	All forces in correct direction and correctly labelled.		
		ii	14.4 + (85 × 9.81 × sin θ) = 41.7	C1	**ecf** from **(a)(ii)**
		ii	θ = 1.9 °	A1	
	b		any three from: • drag reduces velocity **or** increases time to cross **or** some kinetic energy of cyclist goes to heat. • longer crossing time results in cyclist at lower point on other side of gap. • moment on bicycle • rotation lowers height of front wheel.	B1 × 3	Allow argument based on: • very short crossing time (< 0.43s at speed of 6 ms^{-1} up slope). • energy changed to heat insignificant compared to KE • amount of rotation very small in short time.
			Conclusion based on argument(s). The maximum gap width is smaller.	B1	conclusion based on argument(s). So no change in maximum gap width.
			Total	7	

STEMUP.CO.UK

Question			Answer/Indicative content	Marks	Guidance
8			Clear use of vertical motion with downward acceleration **and** horizontal motion at constant velocity	B1	If sin θ and cos θ are confused allow max 1/3.
			vertically $0 = (u\sin\theta)t - \frac{1}{2}g_M t^2$ $t = \frac{2u\sin\theta}{g_M}$	M1	**Allow:** use of a for g_m **Allow:** determination of time to max height using $v=u + at$ Then total time = 2 × time to max height (M1)
			horizonta $x = u\cos\theta \times \frac{(2u\sin\theta)}{g_M}$	A1	**Allow** use of 9.81 instead of g_m
			$x \propto \frac{u^2}{g_M}$	A0	Examiner's Comments This largely synoptic question seemed to cause problems for all but the more able candidates. Few realised the need to resolve the velocity of the ball into horizontal and vertical components. Of the few, who attempted to resolve, the majority applied the equation $v^2 = u^2 + 2\,as$ incorrectly. The Examiners rewarded those who indicated a need to resolve provided that it was clear that the acceleration acted only in the vertical direction. A small minority determined correctly the time to reach maximum height but forgot to double their value to obtain the total flight time. It was, however, pleasing to see some well-set out solutions from able candidates.
			Total	3	

© OCR 2022. You may photocopy this page.

Created in ExamBuilder

STEMUP.CO.UK

Question			Answer/Indicative content	Marks	Guidance
9		i	$\rho = m/V = m/Av$; so $m = A\rho v$	C1	
		i	$7.5 \times 10^{-5} \times 1000 \times v = 0.070$	A1	
		i	giving $v = 0.93$ (m s^{-1})	A0	
		ii	3.7 (m s^{-1})	A1	Accept 3.72
		iii	$F = \Delta(mv)/\Delta t = 0.070 \times (3.72 - 0.93)$	C1	ecf (ii)
		iii	$F = 0.195$ (N)	A1	accept 0.19 or 0.2(0)
		iv	arrow into the shower head perpendicular to its face.	B1	award mark for a reasonable attempt.
			Total	6	

© OCR 2022. You may photocopy this page.

Created in ExamBuilder

STEMUP.CO.UK

Question			Answer/Indicative content	Marks	Guidance
10	a		for thinking time t rider moves s = vt for (constant) deceleration from v to 0, v^2 = 2as so total s = d = $v^2/2a$ + vt	B1	
	b		using y = mx + c d/v = v/2a + t gives an equation resulting in a straight line graph as a and t are constants.	B1 B1	
	c	i	1.30 ± 0.18 entered in table two points correctly plotted on graph with error bars Line of best fit; If points are plotted correctly then lower end of line should pass between (9.5, 1.3) and (10.5, 1.3) **and** upper end of line should pass between (34.0, 2.9) and (35.5, 2.9).	B1	allow ± 0.2 to ± 0.16 **ecf** value and error bar of first point **allow ecf** from points plotted incorrectly.
		i	Worst acceptable straight line.	B1	steepest or shallowest possible line that passes through all the error bars; should pass from top of top error bar to bottom of bottom error bar **or** bottom of top error bar to top of bottom error bar.
		ii	gradient of best fit line. should be about 0.065	B1	**allow ecf** values from graph in all values below
		ii	a = 1/(2 × gradient) giving a = 7.7 (m s^{-2})	B1	allow 7.3 to 7.7
		ii	*y*-intercept of best fit line; should be about 0.65 t = *y*-intercept so should be about 0.65 (s) uncertainty in gradient; should be about 0.010 to 0.012	B1	difference in worst gradient and gradient.
		ii	giving uncertainty in a to be about ± 1.1 to ± 1.2 uncertainty in *y*-intercept and t should be about ± 0.3	B1	difference in worst *y*-intercept and *y* -intercept both uncertainties correct for final mark.
	d		actual d/v values will be lower.	M1	

STEMUP.CO.UK

Question			Answer/Indicative content	Marks	Guidance
			so the *y*-intercept will be lower. hence the actual t (= *y*-intercept) will be smaller.	M1 A1	
			Total	12	
11			in time t_o car moves vt_o path lengths travelled by the two pulses differ by $c(t_o – t)$ but this is twice the distance the car has moved as it is a reflected signal so $2vt_o = c(t_o – t)$.	B1 M1 A1 A0	 justified e.g. best solved by imagining first pulse takes time T_o and second time T and then $T_o – T = t_o$ – t and / or drawing a space diagram.
			Total	3	
12			$eV = ½mv^2$ so $v^2 = 2eV/m$ $ma = eE$ so $a = eE/m$ $x = vt$ $d = ½at^2 = ½a(x/v)^2$ $d = (eE/2m).x^2.(m/2eV) = Ex^2/4V$ $x^2 = 4(d/E)V$	B1 B1 B1 B1 B1 A0	four equations are needed and some sensible substitution, etc. shown for the fifth mark
			Total	5	

© OCR 2022. You may photocopy this page.

Created in ExamBuilder

STEMUP.CO.UK

Question			Answer/Indicative content	Marks	Guidance
13	a	i	Gradient / It is the **acceleration** which is the same (for both) (AW)	B1	**Note:** **acceleration** must be spelled correctly for this mark **Allow**: Gradient / It is the **acceleration** and **acceleration** is free fall/*g/9.8 (1)* **Examiner's Comments** This question was generally answered fairly well although a significant minority could not be awarded the mark as they did not specifically link the gradient to acceleration of the ball.
		ii	Collision is inelastic / kinetic energy is lost (on impact with the ground)	B1	
		ii	Idea that area is height (above ground) / Height (at E) is less (than height of A) (AW)	B1	**Not** heights are not the same **Allow:** displacement or distance travelled by ball for height **Examiner's Comments** Although the underlying physics was fairly well known, this became a discriminating question because a large proportion of candidates did not specifically refer to the change in kinetic energy on impact.
	b	i	u^2 = 2×9.8(1)2×1.7 (=33.32) u = 5.8 (ms^{-1})	B1	**Not** g = 10 **Note** answer to 3 sf is 5.78 ($m\ s^{-1}$) **Examiner's Comments** This synoptic question caused little difficulty to the majority of candidates
		ii	**EITHER** $F\,\Delta t$=m(v-u) **and** $F\,\Delta t$ = $16\times75\times10^{-3}$ $16\times75\times10^{-3}$=0.13×[v–(–5.78)] v = 3.5 (ms^{-1})	C1	**Allow** ECF from (i) **Allow** $v = \frac{14}{23} \times 5.78$ (from graph for C1 mark)

STEMUP.CO.UK

Question			Answer/Indicative content	Marks	Guidance
		ii	OR $a = F/m$ = 16/0.13 (a =123) (upwards positive) v = –5.78 +123 × 75 × 10^{-3} = 3.5 (m s^{-1})	A1	**Note:** answer to 3 sf is 3.46 (ms^{-1}) Using u = –5.8 leads to v = 3.4 scores 2/2 Using u = +5.78 leads to v = 15 scores 1/2 Using equation of motion with a = 9.8(1) is WP score 0/2 **Examiner's Comments** While most candidates linked this question to impulse and were able to score the first mark, it was only a minority that appreciated the vector nature of the problem and were thus able to complete the calculation correctly. Only a small minority attempted to solve the problem by using ratios from the graph or by determining the mean acceleration of the ball during impact.
		iii	$h = \frac{v^2}{2g} = \frac{3.46^2}{2 \times 9.8}$ h = 0.61 (m)	B1	**NO ECF** **Allow** graphical method using $h \propto v^2$ **Allow** answer in range 0.59 – 0.63 (m) **Examiner's Comments** A number of candidates gave answers which were larger than the initial height of release. Largely these were a result of errors in previous answers. It is always advisable to reflect on the value of answers which are dependent on earlier working.
			Total	7	
14			C	1	
			Total	1	

STEMUP.CO.UK

Question			Answer/Indicative content	Marks	Guidance
15	a	i	$g = \frac{2s}{t^2}$ / $g = \frac{2 \times 1.200}{0.50^2}$	C1	
		i	g = 9.6 (m s^{-2})	A1	
		ii	(% uncertainty in s) = 0.08 % or		
		ii	(% uncertainty in t) = 4.00 %	C1	
			% uncertainty in g = ((2 × 4.00) + 0.08)		
		ii	% uncertainty in g = 8.08 (%)	A1	**Allow** 8.1% or 8 %
	b		The steel ball not released straight away (because of the residual magnetism of the electromagnet) / The trapdoor does not open immediately. (AW)	B1	
			Increase distance of fall.	B1	

STEMUP.CO.UK

Question			Answer/Indicative content	Marks	Guidance
	c		*Level 3 (5–6 marks) Clear procedure, measurements and analysis. *There is a well-developed line of reasoning which is clear and logically structured. The information presented is relevant and substantiated.* Level 2 (3–4 marks) Some procedure, some measurements and some analysis. *There is a line of reasoning presented with some structure. The information presented is in the most-part relevant and supported by some evidence.* Level 1 (1–2 marks) Limited procedure and limited measurements or limited analysis. *The information is basic and communicated in an unstructured way. The information is supported by limited evidence and the relationship to the evidence may not be clear.* 0 marks No response or no response worthy of credit.	B1×6	Indicative scientific points may include: Procedure • Release ball and start timer. • Stop timer when ball reaches bottom of ramp. • Make distance as long as possible to reduce % uncertainty in timing. • Repeat measurement for *t* to get an average. • Mark the ramp at the set distance *d* to ensure release point is accurate. • Use a release mechanism to release ball. • Ensure the ball is not pushed when released. Measurements • Measure θ using protractor or calculate θ using trigonometry and correct distances. • Measure *t* using a stopwatch. • Measure the distance *d* using a ruler, from the leading-edge of the ball to the bottom of the ramp. Analysis • Plot a correct graph; e.g. *d* against t^2. • Gradient of best fit straight line determined. • Correct determination of *g* from the gradient.
			Total	12	

STEMUP.CO.UK

Question			Answer/Indicative content	Marks	Guidance
16	a	i	Missing data point and error bar plotted correctly.	B1	**Allow** ½ square tolerance.
		ii	Force measured by pulling back plate with a newton–meter.	B1	
		ii	Extension measured with a ruler (placed close to the transparent plastic tube).	B1	
		iii	Best fit line drawn correctly and gradient determined correctly.	B1	**Ignore** POT for this mark; gradient = 50 ± 4 (N m^{-1})
		iii	Worst fit line drawn correctly and its gradient determined correctly.	B1	**Note**: The line must have a greater/smaller gradient than the best fit line and must pass through all the error bars. **Ignore** POT for this mark.
		iii	$2k$ = 50 (N m^{-1}), therefore k = 25 (N m^{-1})	B1	Possible ECF.
		iii	Absolute uncertainty determined correctly.	B1	Possible ECF within calculation.
		iv	$F \propto x$ / straight line passing through the origin.	B1	
		v	energy stored = ½ × 50 × 0.12^2	C1	Possible ECF from **(iii)**
		v	½ × 50 × 0.12^2 = ½ × 0.39 × v^2	C1	**Allow** 1 mark for v = 0.96 m s^{-1}; used k for single spring
		v	v = 1.4 (m s^{-1})	A1	
	b		force constant of spring arrangement) = $\frac{2k}{3}$	M1	
			$\frac{2k}{3}x = ma$		
			$a = \frac{2}{3 \times 0.39}kx$	M1	
			a = 1.7 kx	A0	
			Total	**13**	

STEMUP.CO.UK

Question			Answer/Indicative content	Marks	Guidance
17		i	($v^2 = u^2 + 2as$) $(2.4 \times 10^6)^2 = (7.2 \times 10^6)^2 + 2 \times a \times 1.2 \times 10^{-2}$	C1	**Allow** other correct methods
		i	$a = (-)\ 1.9 \times 10^{15}$ (m s^{-2})	A1	**Allow** 1 mark for 1.9×10^{13}; distance left in cm **Note** answer to 3 s.f. is 1.92×10^{15} (m s^{-2}) **Ignore** sign
		ii	$E = F/Q$ and $F = ma$	C1	
		ii	$E = \frac{1.67 \times 10^{-27} \times 1.92 \times 10^{15}}{1.60 \times 10^{-19}}$	C1	Possible ECF from **(i)**
		ii	$E = 2.0 \times 10^7$ (N C^{-1})	A1	**Allow** 2 marks for 1.1×10^4; mass of electron used **Allow** 1 s.f. answer
			Total	4	
18			C	1	**Examiner's Comments** This question was slightly more challenging.
			Total	1	
19			A	1	**Examiner's Comments** This question was more challenging still. In this question, it was expected that candidates would use the idea that $v^2 = u^2 + 2aS$, hence realising that v^2 was directly proportional to the drop height, h, giving option A as the correct answer.
			Total	1	
20			B	1	**Examiner's Comments** This question proved particularly straightforward and accessible to nearly all candidates.
			Total	1	

© OCR 2022. You may photocopy this page.

Created in ExamBuilder

STEMUP.CO.UK

Question			Answer/Indicative content	Marks	Guidance
21	a		arrow down through centre of ball labeled weight **or** W **or** mg **or** 1.2 N	B1	zero if any other arrows or forces present Examiner's Comments There were some carelessly drawn arrows on the diagram but otherwise this was done well. There were some arrows labelled *centripetal force.*
	b	i	(horizontally) mv^2/r (**or** $mr\omega^2$) = T sin θ **and** (vertically) W **or** mg = T cos θ (tan θ = v^2/rg **or** rw^2/g) tan θ = 0.045 × 4 × 9.87 × 2.2 / 9.81 **or** 0.48 / 1.2 (= 0.40) θ = 22°	M1 A1 A0	**accept** figures in place of algebra, r = 0.045 m v = 0.42 m s^{-1} ω = 3π rad s^{-1}; $r\omega^2$ = 4.0 m s^{-2} ; W = 1.2 N and m = 0.12 kg and $mr\omega^2$ = 0.48 N **accept** labelled triangle of forces diagram **N.B.** this is a *show that Q* ; sufficient calculation must be present to indicate that the candidate has not worked back from the answer
		ii	k = (mg / x_0 = 1.2 / 0.050) = 24 (N m^{-1}) (T = mg / cos θ = kx giving) x = 1.2 / 24 cos 22 x = 0.054 (m)	C1 C1 A1	**or** solution by ratios Examiner's Comments About half of the candidates completed the angle calculation successfully with a slightly smaller number finding the correct extension of the string.
	c		(y = ½gt^2 =) 0.18 = 0.5 × 9.81 × t^2 giving t = 0.19 (s) (x = vt =) 0.42 × 0.19 = 0.08 (m) distance = √(r^2 + x^2) = √(0.0020 + 0.0064) = 0.092 (m)	C1 C1 C1 A1	**alt:** projectile motion: x = vt, y = ½gt^2 y = ½g(x / v)^2 **ecf (b)i** for v; x^2 = $2yv^2/g$ = 2 × 0.18 × 0.42^2/9.81 Examiner's Comments About half of the candidates found the time for the ball to fall to the bench. Most then managed to find the horizontal distance from the point of release, but half forgot that the point of reference in the question was the centre of rotation so failing to complete the calculation.

© OCR 2022. You may photocopy this page.

Created in ExamBuilder

STEMUP.CO.UK

Question			Answer/Indicative content	Marks	Guidance
	d		T increases **or** string stretches **or** angle θ increases to provide / create a larger centripetal force	M1 A1	**allow** mv^2/r **or** $mr\omega^2$ in place of *centripetal force* causality must be implied to gain the A mark **Examiner's Comments** About half of the candidates appreciated that the tension in the string increased or that the angle of the string to the vertical increased. Most answers gave the impression that the *centripetal force* was a *real* force rather than its provision being necessary for the ball to follow a circular path
			Total	12	
22			$(v^2 = 2as + u^2)$; $v = (2 \times 9.81 \times 0.30)^{½}$ (Allow any subject) speed = 2.4 (m s^{-1})	C1 A1	**Allow** ($s = ½ a t^2$) to give t = 0.247 and (v = at) gives 2.42 **Examiner's Comments** Examiners were pleased that nearly all candidates successfully employed Newton's equations of motion ideas to arrive at the correct answer. Those that did not either mis- substituted values or forgot to take a square root.
			Total	2	

© OCR 2022. You may photocopy this page.

Created in ExamBuilder

STEMUP.CO.UK

Question			Answer/Indicative content	Marks	Guidance
23	a		work done = 400 × 0.80 work done = 320 (J)	C1 A1	Examiner's Comments This was answered correctly by most candidates; a tiny number did not convert from cm to m correctly.
	b		ratio of speeds = ratio of distances (since same time) **or** ratio = 80 / 2 ratio = 40	C1 A1	**Allow** 40:1 **Allow** 2 marks for ratio 29.4 (assuming p same) **Not** 1:40 for A1 Examiner's Comments Unsuccessful candidates tried to employ 'suvat' equations, although many candidates realised that the required ratio was also the ratio of the distances travelled in the same time period. Some credit was given for those candidates that assumed constant pressure and 100% efficiency.
	c		work done = 1200 × 9.81 × 0.02 (= 235.4) efficiency = 235.4 / 320 × 100 efficiency = 74 %	C1 A1	**Note:** Using g =10 N kg^{-1} gives 75%: allow 1 mark max Possible ECF from **(a)** **Note:** 0.74 scores 1 mark **Allow** 2 marks for using 235/320 × 100 = 73% **Allow** use of 9.8 N kg^{-1} gives 73.5% for 2 marks **Allow** 1 mark for 71%, force = (1200g – 400) N used **Allow** 1 mark for 76%, force = (1200g + 400) N used Examiner's Comments The majority of candidates successfully calculated the work done on the car and hence the efficiency of the system.
			Total	6	
24			C	1	
			Total	1	

STEMUP.CO.UK

Question			Answer/Indicative content	Marks	Guidance
25	a	i	vertical component =30.0 sin(70°) or 30.0 cos(20°) vertical component = 28.2 (m s^{-1})	 A1	 Allow 2 SF answer of 28
		ii	Evidence of $v^2 = u^2 + 2as$ and $v = 0$ or $gh = {}^1/_2\, u^2$ $h = \frac{28.2^2}{2\times9.81}$ (Any subject) h = 40.5 (m)	C1 M1 A0	Allow v and u interchanged; a and g interchanged Allow use of candidate's answer for (a)(i) at this point Ignore sign Allow $h = \frac{28^2}{2\times9.81}$ or $(30 \sin(70))^2/(2 \times 9.81)$ No ECF from (a)(i) for the second mark
		iii	The ball has horizontal motion / velocity (AW)	B1	Allow idea of horizontal e.g. sideways, forwards Not: 'moving' unqualified
		iv	(horizontal velocity =) 30.0 cos 70° or 10.2…. (m s^{-1}) or 30.0 sin 20°. $E_k = {}^1/_2 \times 0.057 \times 10.26^2$ E_k = 3.0(J)	C1 A1	 Allow 1 SF answer Not 22 (J), v = 28 used Not 23 (J), v = 28.2 used Not 140 (J), v = 70 used <u>Examiner's Comments</u> Part (i) was particularly well answered by 95% of all candidates. Nine out of ten candidates scored full marks in part (a)(ii), as they remembered that the question asks to *show* that the maximum height is around 40m. Working for this type of question is essential. In part (a)(iii), three quarters of all candidates correctly talked about the ball still having a horizontal velocity (which wasn't zero) and therefore still possessing some KE. The key to this part (a)(iv), remembered by most candidates, was to use the horizontal component of velocity to find the KE at the maximum height. Some used the initial speed and others used the initial vertical velocity component found in part (a)(i).

© OCR 2022. You may photocopy this page.

Created in ExamBuilder

STEMUP.CO.UK

Question			Answer/Indicative content	Marks	Guidance

	b		Level 3 (5–6 marks)
			Clear description and analysis.
			
			There is a well–developed line of reasoning which is clear and logically structured. The information presented is relevant and substantiated.
			
			Level 2 (3–4 marks)
			Some description and some analysis.
			
			There is a line of reasoning presented with some structure. The information presented is in the most–part relevant and supported by some evidence.
			
			Level 1 (1–2 marks)
			Limited description and limited analysis
			or limited description
			or limited analysis
			
			There is an attempt at a logical structure with a line of reasoning. The information is in the most part relevant.
			
			0 marks
			No response (NR) or no response worthy of credit (0).
				B1 x 6	Indicative scientific points may include:
					Description
					
					• Ruler used to determine *x*
					• Average readings to determine *x*
					• x recorded for various *v*
					• Suitable method for consistent *v* or varying *v* e.g.
					  • Released from same point on a track
					  • Ejected from a spring device with different compressions
					• Suitable method of determining point of impact e.g.
					  • trial run to get eye in approximate correct position
					  • carbon paper so that ball makes a mark on paper
					  • scale in frame of video recording
					  • tray of sand to catch ball
					• Suitable instrument used to determine *v* (light–gate / motion sensor / video techniques) or suitable description of inference of v from other measurements such as energy released from spring of known *k* and *x*
					• Ensuring the initial velocity of ball is horizontal
					
					Analysis
					
					• Horizontal velocity is constant
					• Time of fall is independent of *v* /horizontal velocity
					• Suggested relationship: e.g. $x \propto v$,x d.p. to V^2, etc
					• Plot a graph of *x* against *v* or graph consistent with candidate's suggested relationship
					• If relationship is correct, then a **straight line** through the **origin**.
					• Suggested relationship supported by correct physics or algebra.
					• Correct relationship supported by physics.

© OCR 2022. You may photocopy this page.

Created in ExamBuilder

STEMUP.CO.UK

Question			Answer/Indicative content	Marks	Guidance
					Note: L1 is used to show 2 marks awarded and L1^ is used to show 1 mark awarded. <u>Examiner's Comments</u> Many candidates had plenty to say that was sensible. There was plenty of evidence that candidates had seen this experiment or had performed a similar one themselves. A few confused the question, instead describing how to find the time of flight or that the ball was falling vertically. Others described what they thought would happen to the vertical component of velocity when they changed the vertical distance that the ball dropped. Exemplar 2 Use your knowledge of projectile motion to suggest the relationship between *v* and *x*. Describe how an experiment can be safely conducted to test this relationship and how the data can be analysed. make sure no one in way As in a projectile the horizontal component of velocity is constant given air resistance is negligible then a equation of $x = \frac{1}{2}(u+v)t$ could become $x = vt$ where x is distance travelled v is velocity of ball and t is time of flight therefor for a constant time of flight it can be said $x \propto v$. To test this it is very hard to keep time of flight constant as this is due to its time of freefall. To test this a ball would be rolled of a table at varying speeds. To calculate this speed a light gate can be used passing through the center of the metal ball. As distance travelled is equal to the diameter of the ball, measured by a ruler, speed can be calculated using distance/time from light gate. For safety the ball should land in sand as not to shatter or land on someones foot. This also makes measuring x much easier as x is equal to the horizontal distance from the edge of the table to the center in the sand measured using a ruler. If the time taken to fall is kept constant measured by using a stop watch and controlled by raising or lowering the launch point when v is plotted against x on a graph it can be expected to be linear and pass through the origin.

STEMUP.CO.UK

Question			Answer/Indicative content	Marks	Guidance
					In the first paragraph, the candidate has made clear that the time of flight is constant and goes on to explain why towards the end of the response. This supports the prediction that $v \propto x$ In addition, the candidate takes time to explain how to obtain data for both the horizontal velocity and horizontal distance. It was pleasing to see light gates and motion sensors being employed, with the best answers explaining how to use the data provided by the sensors to calculate the velocity of projection. The exemplar response also includes the correct analysis. There is a graph of v against x and the resulting best fit straight line through the origin supports the idea that these two variables are directly proportional. Too many candidates did not mention the crucial statement about the line going through the origin, limiting their response to a high L1 or low L2.
			Total	12	

STEMUP.CO.UK

Question			Answer/Indicative content	Marks	Guidance
26		i	From t = 0 to t = 2.0 s: a non–zero horizontal line	B1	
			From t = 2.0 to t = 3.5 s: line showing v = 0	B1	
			From t = 3.5 to t = 4.0 s: non–zero horizontal line showing v is <u>opposite</u> in direction <u>and</u> magnitude larger than that of line drawn at t = 0 to t = 2.0.	B1	Judgement by eye
		ii	KE is constant.	B1	
			GPE increases linearly / proportional to t	B1	**Allow:** 'at constant rate' for 'linear' Not: unqualified 'constantly' <u>Examiner's Comments</u> Nearly four fifths of candidates completed 20a well, especially if they clearly stated the equations for momentum and kinetic energy. Those that did not generally forgot that the question required an expression with 'p' and 'm' in it. $^1/_2$ pv was a common wrong answer. 20bi was answered well, with some candidates either slightly misreading the graph when the velocity became negative or not spotting that the line was steeper for the last section of the movement than it was in the first. Most candidates spotted that the KE was constant because the velocity was constant. Rather fewer candidates explained that the GPE increased *at a constant rate*.

STEMUP.CO.UK

Question			Answer/Indicative content	Marks	Guidance
		iii	$V^2 = 0.80^2 + 2 \times 9.81 \times 0.40$ $V = 2.9$ (m s^{-1})	C1 A1	**Allow** 1 mark for $(2 \times 9.81 \times 0.40)^{1}/_{2} = 2.8$ (m s^{-1}) Examiner's Comments Many candidates selected the correct equation, although did not realise that the load was not at rest when it was released. The initial velocity was found from the graph on page 22 of the paper and was 0.80 ms^{-1}.
		iv	$F = 0.12 \times 2.9/0.025$ $F = 14$ (N)	C1 A1	Possible ECF from **(iii)1** **Note:** use of 2.8 m s^{-1} gives F = 13(.44 N) **Note:** 1.4×10^{n} (N) scores 1 mark Examiner's Comments Nearly three quarters of the candidates used the correct method for finding the average force acting on the load by considering the rate of change of momentum.
			Total	9	

© OCR 2022. You may photocopy this page.

Created in ExamBuilder

STEMUP.CO.UK

Question			Answer/Indicative content	Marks	Guidance
27	a		(change in) KE = (change in) GPE /AW $\frac{1}{2}(m + 0.8)v^2 = 0.6\ mg$ (and hence equation as shown on QP)	M1 A1	**allow** mgh = ½Mv^2 as long as it is clear that m and M are different, i.e. NOT mgh = ½mv^2 **allow** linear motion equation $v^2 = u^2 + 2as$ <u>and</u> $F = Ma$ $(W =)\ mg = (m + 0.8)a$; $u = 0$ and $s = 0.6$ <u>Examiner's Comments</u> The challenge to candidates in answering this *show that* question was to produce a convincing proof. More chose to use constant acceleration equations and $F = ma$ rather than loss of potential energy equates to gain in kinetic energy. The difficulty in the former method was justifying the statement $F = mg = (m + 0.800)\ a$. Most just quoted that $a = mg/\ (m + 0.800)$ which immediately gave the relationship shown in the question. The difficulty with the second method was that most candidates wrote $mgh = \pm\frac{1}{2}mv^2$ as the first line of their answer. In the next line one m became $(m + 0.800)$ without explanation to give the required relationship. Only candidates who gave more explanation were credited the marks. The candidate who wrote this perfect answer (exemplar 7) solved the problem in the first method of solution by introducing the tension in the string (labelled T on Fig. 4.1). Exemplar 7 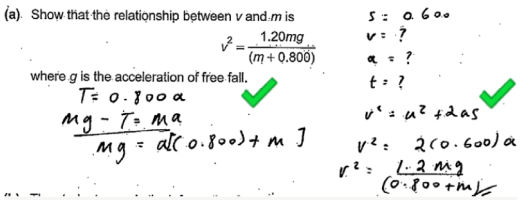 (a) Show that the relationship between v and m is $v^2 = \frac{1.20mg}{(m + 0.800)}$ where g is the acceleration of free fall. $T = 0.800a$ $mg - T = ma$ $mg = a[(0.800) + m]$ $s = 0.600$ $v = ?$ $a = ?$ $t = ?$ $v^2 = u^2 + 2as$ $v^2 = 2(0.600)a$ $v^2 = \frac{1.2mg}{(0.800+m)}$
	b	i	(v^2 =) 4.93 (±) 0.22	B1 B1	**allow** 4.9 (±) 0.2 (same number of decimal places)

STEMUP.CO.UK

Question			Answer/Indicative content	Marks	Guidance
		ii	Point (and error bar) plotted correctly Line of best-fit drawn through all points shown (use protractor tool at 49°)	B1 B1	tolerance ±½ small square; possible **ecf** from (b)**(i)** **allow ecf** from point plotted incorrectly or point omitted <u>Examiner's Comments</u> Most candidates calculated the value of v^2 to two decimal places successfully. Fewer were successful in giving the absolute uncertainty as ± 0.22. A popular distractor was ± 0.10. On the graph of Fig. 4.2 only the correct position of the point was required to gain the mark. The length of the uncertainty bar was ignored. A significant number of candidates forgot to draw the line of best fit on the graph.
	c	i	$v^2 = \frac{1.20mg}{(m + 0.800)}$ compared with $y = mx + c$	B1	**allow minimum of** gradient = v^2/[m/(m +0.8)] = 1.2 g **or expect** $y = v^2$ <u>and</u> $x = m/(m + 0.800)$ so gradient = $1.20g$ <u>Examiner's Comments</u> The common successful method employed by the majority was to compare the given equation with standard form for a straight line $y = mx + c$. A simple rearrangement of the relationship without any explanation was not considered to be adequate.

STEMUP.CO.UK

Question			Answer/Indicative content	Marks	Guidance
		ii	one acceptable worst-fit line drawn	B1	roughly between extremes of top and bottom error bars or by eye; consequential **ecfs** for rest of **(ii)**
			large triangle used to determine gradient	B1	$\Delta x > 0.13$;
			Gradient (used to determine 'worst' *g*)	B1	**expect** steepest 12.5 ± 0.2 or shallowest 10.3 ± 0.2 if point from **bii** not plotted steepest line is 12.9
			absolute uncertainty given to **one decimal place**	B1	answer from ± 0.8 to 1.1(m s^{-2}); **allow ecf** from gradient value <u>Examiner's Comments</u> To avoid the problem of various lengths of error bar, candidates were judged to have drawn an acceptable worst fit line if it passed through opposite ends of the top and bottom bars on their graphs. Almost all gained the mark for using a triangle to determine the gradient of the line which spanned more than 0.13 on the *x* – scale. Most candidates were able to gain credit for finding the gradient of their graph correctly. The determination of the absolute uncertainty to one decimal place then proved to be too difficult a challenge for the majority.

© OCR 2022. You may photocopy this page.

Created in ExamBuilder

STEMUP.CO.UK

Question			Answer/Indicative content	Marks	Guidance
	d		card appears shorter or time measured shorter calculated speed of trolley larger gradient of graph steeper **or** v^2 α g /AW **so** calculated *g* is greater	B1 B1 B1 B1	**N.B.** each B mark is consequential on the previous statement; e.g. **ecf max** of 3 marks for correct consequences of stating card appears longer **or** time longer <u>Examiner's Comments</u> Candidates gave full and usually clear answers to this part. There were four consequential marking points in this answer. Each candidate was given credit for every point that followed logically from the previous one, even when that previous one was incorrect. In the example (exemplar 8) shown here the candidate stated that the card appeared longer, which is incorrect. There were still three marks available for stating that the speed would appear lower and deducing that g would appear smaller. By this method most candidates were credited with at least half of the available marks. Exemplar 8 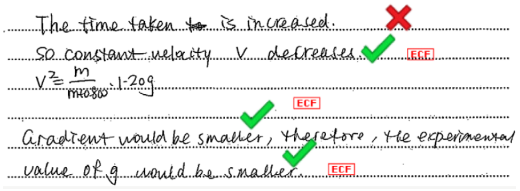 The time taken ~~to~~ is increased. so constant velocity v decreases. ECF $v^2 = \frac{m}{m+0.80} \cdot 1.20g$ ECF Gradient would be smaller, therefore, the experimental value of g would be smaller. ECF
			Total	15	

STEMUP.CO.UK

Question			Answer/Indicative content	Marks	Guidance
28			• (initial) upward force unchanged • (initial) downwards force/weight increases • (initial) resultant force decreases • (initial) acceleration decreases • (initial) rate of change in momentum of rocket decreases • time taken to expel water increases • valid conclusion that the maximum height depends on more than one factor	B1 x 3	**Maximum 3** marks from 7 marking points: **Ignore** comments which assume an increase in pressure **Ignore** heavier **Allow** net or unbalanced or total for resultant **Allow** fuel for water e.g. the height depends on the bottle's velocity and its height when all the water has been expelled / the height depends on both the acceleration and the time taken to expel the water Examiner's Comments This question involved several factors and a conclusion was not required; hence the word 'discuss'. Candidates who performed well on this question realised that the weight of the rocket would increase, reducing the resultant force, and m would increase in the formula F = ma. These would both give a reduced initial acceleration and imply a smaller height. However, the time taken to expel the water would increase, meaning that the rocket would accelerate for longer. One common misconception was that the larger volume of water in the bottle would increase the pressure of the trapped air. However, as a pump was used to determine the pressure before lift-off, this argument was not given credit.
			Total	3	
29			C	1	
			Total	1	

© OCR 2022. You may photocopy this page.

Created in ExamBuilder

STEMUP.CO.UK

Question			Answer/Indicative content	Marks	Guidance
30			Tangent drawn correctly by eye	B1	
			Attempt made to determine the gradient of tangent	C1	
			acceleration = 1.3 (m s^{-2})	A1	**Allow** answer in range 1.2 to 1.4 (m s^{-2})
			Total	3	

© OCR 2022. You may photocopy this page.

Created in ExamBuilder

STEMUP.CO.UK

Question			Answer/Indicative content	Marks	Guidance
31	a		18 x 0.5 or 9(.0) m (Any subject) $(a = \frac{v^2-u^2}{2s})$; $(a = \frac{v^2-u^2}{2s})$; Deceleration = 5.6 (m s^{-2})	C1 C1 A1	**Allow** 1 mark max for 4.26 or 4.3; (38 m used instead of 29 m) **Allow** 1 mark max for 3.4 or 3.45; (47 m used instead of 29 m) **Ignore** minus sign <u>Examiner's Comments</u> Many candidates use the stopping distance for the braking distance of the car, giving a deceleration that was too low and scoring 1 mark only. More successful candidates remembered to calculate the thinking distance involved (9 m) and subtract this from the stopping distance to give a braking distance of 29 m. Algebraic rearrangement, substitution and evaluation from then on was excellent.

STEMUP.CO.UK

Question			Answer/Indicative content	Marks	Guidance

	b		Level 3 (5–6 marks)
			Clear description of experiment **and** clear analysis.
			
			There is a well-developed line of reasoning which is clear and logically structured. The information presented is relevant and substantiated.
			
			Level 2 (3–4 marks)
			Some description of experiment and some analysis.
			
			There is a line of reasoning presented with some structure. The information presented is in the most-part relevant and supported by some evidence.
			
			Level 1 (1–2 marks)
			Limited description of experiment or limited analysis
			
			There is an attempt at a logical structure with a line of reasoning. The information is in the most part relevant.
			
			0 marks
			No response or no response worthy of credit.
				B1x6	Use level of response annotation in RM Assessor, e.g. L2 for 4 marks, L2^ for 3 marks etc.
					Indicative scientific points may include:
					Description
					
					• Ruler used to determine *x*
					• Balance used to determine mass of marble
					• x recorded for various *v*
					• Average readings to determine *x*
					• Suitable instrument used to determine *v* (light-gate / motion sensor / video techniques) or suitable description of inference of *v* from other measurements such as energy released from spring of known *k* and *x*, double average speed
					
					• Suitable method for consistent *v* or varying *v* e.g.
					  ◦ Released from same point on a track or ramp
					  ◦ Ejected from a spring with different compressions
					
					Analysis
					
					• Plot a graph of *x* against v^2 or graph consistent with suggested relationship e.g. v^2 against *x*; *v* against $\sqrt{x}$; $\frac{1}{2} mv^2$ against *x*
					• If relationship is correct, then a **straight line** through the origin.
					• Determination of gradient
					• F determined by F = m/2 divided by (gradient of *x* against v^2 graph) or other relationship with F as the subject consistent with candidate's proposed graph.
					
					<u>Examiner's Comments</u>
					
					Most candidates made excellent attempts at describing this investigation. The analysis section was particularly well completed compared with previous sessions. Many of these investigations would have been successful had they been

STEMUP.CO.UK

Question			Answer/Indicative content	Marks	Guidance
					given as instructions to year 12 students as shown by Exemplar 6. The higher ability candidates distinguished themselves by being clear about how they were going to measure or calculate the speed of the marble and do that in a predictable way. This is shown best by exemplar 7. Exemplar 6 • Describe how an experiment can be conducted in the laboratory to investigate the relationship between *v* and *x*. • Explain how the data can be analysed to determine *F*. [6] Using a light gate on a rough surface, measure initial speed of each different speeds (6 different). Measure 'x' distance before stopping with a metre ruler or tape measure and measure from point it leaves light gate to the point where it stops. Record all 6 readings in a table and plot a graph of v^2 against x drawing a line of best fit which may go through the origin if relationship v^2 against x is true. $\frac{1}{2}mv^2 = Fx$ gradient $= \frac{2F}{m}$ $mv^2 = 2Fx$ $v^2 = \frac{2F}{m}x$ $y = mx$ to find gradient of of line of best fit draw a large triangle To find the mass of the marble use a scale then the ~~Frictional force = gradient of line of best fit x mass~~ Frictional force = gradient of line of best fit x mass of marble 2 This response is a very good attempt. They have employed a light gate to measure the speed, without much explanation of how that device would calculate the speed itself. The analysis is sound, with a clear indication of what they would do with the data and how the relationship in the question matched up to a straight line of best fit. The candidate has made sure that they have explained how to calculate *F* from the gradient, rather than leaving it to the reader to work it out for themselves. This response scored Level 2.

STEMUP.CO.UK

Question			Answer/Indicative content	Marks	Guidance
					Exemplar 7 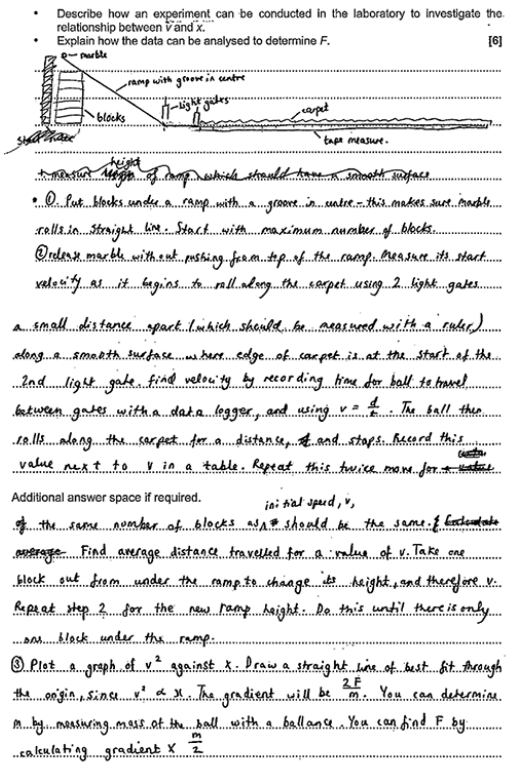 • Describe how an experiment can be conducted in the laboratory to investigate the relationship between v and x. • Explain how the data can be analysed to determine F. [6] ~~t measure height of ramp which should have a smooth surface~~ • ① Put blocks under a ramp with a groove in centre – this makes sure marble rolls in straight line. Start with maximum number of blocks. ② release marble without pushing from top of the ramp. Measure its start velocity as it begins to roll along the carpet using 2 light gates a small distance apart (which should be measured with a ruler) along a smooth surface where edge of carpet is at the start of the 2nd light gate. find velocity by recording time for ball to travel between gates with a data logger, and using $v = \frac{d}{t}$. The ball then rolls along the carpet for a distance, ~~d~~ and stops. Record this value next to v in a table. Repeat this twice more for ~~a value~~ Additional answer space if required. initial speed, v, of the same number of blocks as should be the same. ~~Calculate average~~ Find average distance travelled for a value of v. Take one block out from under the ramp to change its height, and therefore v. Repeat step 2 for the new ramp height. Do this until there is only one block under the ramp. ③ Plot a graph of v^2 against x. Draw a straight line of best fit through the origin, since $v^2 \propto x$. The gradient will be $\frac{2F}{m}$. You can determine m by measuring mass of the ball with a ballance. You can find F by calculating gradient x $\frac{m}{2}$ This response is similar in many ways to the previous exemplar. The difference is that the candidate has explained carefully how they will achieve different speeds and equally, how 2 light gates connected to a datalogger will measure the time of transit between the gates. The calculation of the speed *v* is easy to spot as the distance between the light gates divided by the time between them. Furthermore, there is reference to repeat readings for given *v* and an average distance for *x*. The analysis to find *F* is not quite as explicit as that in the previous exemplar, yet it is easily sufficient for a Level 3 response.
			Total	9	

STEMUP.CO.UK

Question			Answer/Indicative content	Marks	Guidance
32	a		area under graph = 0.5 x 2.0 x 900 = 900 (N s) (mU = 900) U = 13 (m s^{-1})	C1 A1	**Not**: (initial force/mass) <u>Examiner's Comments</u> It was good to see that most candidates understood that Newton's second law of motion is more than the statement that *F=ma*. Many had successful attempts with some candidates missing that it is the rate of change of momentum, rather than the change of momentum that is required. About two-thirds of candidates also correctly indicated that the area under the graph represents the impulse or the change in momentum. In Question 20(b), some candidates assumed, incorrectly, that the maximum force multiplied by the time taken would give the change in momentum and so scored zero marks. Rather more simply divided the maximum force by the mass, which gave the right answer yet with incorrect physics. This approach also scored zero. In fact, more successful responses made it clear that the area of the triangle on the graph was the impulse and that that area gave a change in momentum of 900 Ns.

© OCR 2022. You may photocopy this page.

Created in ExamBuilder

STEMUP.CO.UK

Question			Answer/Indicative content	Marks	Guidance
	b		The graph showing a (smooth) **curve** of continuously/always decreasing magnitude of gradient (with respect to time). **Curve** starts at (0,*U*) and stops at (2.0,0)	M1 A1	**Note:** curve must not be asymptotic at either end of the curve. <u>Examiner's Comments</u> Successful candidates spotted that the resultant force, the acceleration and hence the gradient of this speed- time graph decreased in magnitude with time. A constant gradient, ie a straight line between (0,U) and (2.0,0), can only be achieved by a constant decelerating resultant force. This gives a curve that starts off (0,U) with a steep negative gradient and finishes with a small negative gradient at (2.0,0).
			Total	4	
33			A	1	
			Total	1	
34			C	1	
			Total	1	

© OCR 2022. You may photocopy this page.

Created in ExamBuilder

STEMUP.CO.UK

Question			Answer/Indicative content	Marks	Guidance
35			**Level 3 (5–6 marks)** Clear description of experiment **and** measurements **and** clear analysis. *There is a well-developed line of reasoning which is clear and logically structured. The information presented is relevant and substantiated.* **Level 2 (3–4 marks)** Some description of experiment **and** some measurements **and** some analysis. *There is a line of reasoning presented with some structure. The information presented is in the most-part relevant and supported by some evidence.* **Level 1 (1–2 marks)** Limited description of experiment **or** Limited measurements **or** Limited analysis *The information is basic and communicated in an unstructured way. The information is supported by limited evidence and the relationship to the evidence may not be clear.* **0 marks** No response or no response worthy of credit.	B1×6	**Indicative scientific points may include:** **Description** • Release method • Ensure bob is not pushed • Repeat experiment for same *H* • Repeat for different H • Centre of mass of single bob and joined bob considered • Keep bob string taught **Measurements** • Measure heights *h* and *H* with ruler • Use centre of mass of bob or another suitable method • Use video camera to record motion • Use of datalogger and appropriate sensor to measure *H* and *h* • Measure mass with (top pan) **balance** **Analysis** • Construct a table of *h* and *H* • Plot graph of *h* against *H* • LoBF should pass through origin. • Determine gradient or calculate *h*/*H* ***repeatedly*** • gradient $= \left(\frac{M}{M+m}\right)^2$(gradient must be consistent with the plot) • Masses substituted into above expression and checked against experimental gradient
			Total	**6**	

STEMUP.CO.UK

Question			Answer/Indicative content	Marks	Guidance
36	a		(Kinetic energy) reduces (with height) At maximum height, KE is minimum / non-zero	B1 B1	**Allow** idea that KE is transferred to GPE / KE store reduces and GPE store increases **Not** references to KE being a vector / having components for second mark
	b		(u =) 68 sin 11° **or** 13.0 (m s^{-1}) t = 13.0 / 9.81 <u>and</u> t correctly evaluated t = 1.3(2) (s)	C1 C1 A0	**Not** t=90/(68cos(11)) =1.35 for zero marks. **Allow** any subject
	c		(t =) 2 × 1.3 **or** 2.6 (s) (x =) 68 cos11° × 2.6 or 174 (m) horizontal distance = 174 – 90 horizontal distance = 84 (m)	C1 C1 A1	**Note** answer is 86 (m) if 1.32 s is used **Note** answer is 87 (m) if 1.3226… s is used **Allow** 1.3 × 68 cos11° for 1 mark **Allow** 3 or –3 m for 2 marks
	d	i	A collision in which kinetic energy is lost	B1	**Allow** KE is not conserved
		ii	Conservation of momentum Idea that velocity is to the right **and** velocity is very small / much smaller than 68 (m s^{-1})	B1 B1	**Not** 'goes backwards'
			Total	10	

STEMUP.CO.UK

Question			Answer/Indicative content	Marks	Guidance
37	a		There is no contact force between the astronaut and the (floor of the) space station (so no method of measuring / experiencing weight)	B1	**Allow** astronaut and the space station have same acceleration (towards Earth) / floor is falling (beneath astronaut) <u>Examiner's Comments</u> Misconception Experiencing weightlessness is not the same as being in freefall There was a lack of understanding of the nature of feeling weightless. The sensation of 'weightlessness' is a lack of the physiological sensation of 'weight'. The skeletal and muscular systems are no longer in a state of stress. This sensation is caused by a lack of contact forces as a result of the ISS and the astronaut experiencing the same acceleration. Common incorrect responses included: • the astronaut is weightless because he is falling • there is no resultant force on the astronaut • gravity is too weak to have any effect on the astronaut • the ISS orbits in a vacuum where there is no gravity.

© OCR 2022. You may photocopy this page.

Created in ExamBuilder

STEMUP.CO.UK

Question			Answer/Indicative content	Marks	Guidance
	b	i	M = 5.97 x 10^{24}(kg) **or** ISS orbital radius R = 6.78 x 10^6(m) **or** $g \propto 1/r^2$ (gr^2 = constant so) g x (6.78 x $10^6)^2$ = 9.81 x (6.37 x $10^6)^2$ g = 8.66 (N kg^{-1})	C1 C1 A1	**or** g (= GM/R^2) = 6.67 x 10^{-11} x 5.97 x 10^{24} / (6.78 x $10^6)^2$ **Allow** rounding of final answer to 2 SF i.e. 8.7 (N kg^{-1}) <u>Examiner's Comments</u> The simplest method here was to use the fact that g is inversely proportional to r^2, so gr^2 = constant. If this was not used, a value for the mass of the Sun had to be calculated, which introduced a further step. Candidates who omitted this calculation and used a memorised value of the Sun's mass instead were unable to gain full marks, because they invariably knew it to 1 s.f. only, whereas 3 were required. Errors occurred when candidates used the incorrect distance in the formula for g. Common errors included: • forgetting to square the radius • using the Earth's radius rather than the orbital radius of the satellite • calculating (6.37 × 10^6 + 4.1 × 10^5) incorrectly.
		ii	$2\pi r/T = v$ **or** T = 2 × 3.14 × 6.78 × 10^6 / 7.7 × 10^3 T = 5.5 × 10^3 s (= 92 min)	M1 A1	**ECF** incorrect value of R from **b(i)**

STEMUP.CO.UK

Question			Answer/Indicative content	Marks	Guidance
	c		$\frac{1}{2}Mc^2$ ($\frac{1}{2}N_A mc^2$) $= \frac{3}{2}RT$ = c^2 = 3 × 8.31 × 293 / 2.9 × 10^{-2} = 2.52 × 10^5 $\sqrt{c^2}$ = 500 (m s^{-1}) (= 7.7 × 10^3 / 15)	C1 C1 A1 A0	or $\frac{1}{2}mc^2 = \frac{3}{2}kT$ or $c^2 = 3kT/m$ or c^2 = 3 ×1.38 x 10^{-23} × 6.02 x 10^{23} x 293/2.9 × 10^{-2} = 2.52 × 10^5 not (7.7 × 10^3 / 15) = 510 (m s^{-1}) Examiner's Comments The success in this question depended on understanding the meaning of the term *m* in the formula $\frac{1}{2}m\overline{c^2} = \frac{3}{2}kT$ given in the Data, Formulae and Relationship booklet. A significant number of candidates took *m* to be the mass of one mole (the molar mass, *M*) whereas *m* is actually the mass of one molecule. Candidates who used the formula $\frac{1}{2}M\overline{c^2} = \frac{3}{2}RT$ were usually more successful because the molar mass had been given in the question stem.
	d		power reaching cells (= *IA*) = 1.4 × 10^3 × 2500 = 3.5 × 10^6 W power absorbed = 0.07 × 3.5 × 10^6 = 2.45 × 10^5 W cells in Sun for (92 – 35 =) 57 minutes average power = 57/92 × 2.45 × 10^5 = 1.5 × 10^5 (W)	C1 C1 C1 A1	mark given for multiplication by 0.07 at any stage of calculation (90 – 35 =) 55 minutes using *T* = 90 minutes ECF value of *T* from **b(ii)** 55/90 × 2.45 × 10^5 = 1.5 × 10^5 (W) using *T* = 90 minutes Examiner's Comments Although this question looked daunting, it was actually quite linear and many candidates who attempted it were able to gain two or three marks even if they did not eventually get to the correct response. Candidates who set out their reasoning and working clearly were more liable to gain these compensatory marks.
			Total	13	

© OCR 2022. You may photocopy this page.

Created in ExamBuilder

STEMUP.CO.UK