Oxford Cambridge and RSA

Friday 20 June 2025 – Morning

A Level Chemistry B (Salters)

H433/03 Practical skills in chemistry

Time allowed: 1 hour 30 minutes

You must have:
- the Practical Insert (inside this document)
- the Data Sheet for Chemistry B

You can use:
- a scientific or graphical calculator
- an HB pencil

Please write clearly in black ink. **Do not write in the barcodes.**

Centre number | | | | | | Candidate number | | | | |

First name(s) _____

Last name _____

INSTRUCTIONS
- Use black ink. You can use an HB pencil, but only for graphs and diagrams.
- Write your answer to each question in the space provided. If you need extra space use the lined page at the end of this booklet. The question numbers must be clearly shown.
- Answer **all** the questions.
- Where appropriate, your answer should be supported with working. Marks might be given for using a correct method, even if your answer is wrong.

INFORMATION
- The total mark for this paper is **60**.
- The marks for each question are shown in brackets **[ ]**.
- Quality of extended response will be assessed in questions marked with an asterisk (*).
- This document has **16** pages.

ADVICE
- Read each question carefully before you start your answer.

© OCR 2025 [601/5371/4]
DC (PQ/CT) 344775/3
OCR is an exempt Charity

1 This question is about the properties of some Group 2 alkaline earth metals and their compounds.

(a)
(i) The term 'alkaline' refers to oxides and hydroxides of the Group 2 elements.

Explain why calcium oxide is described as alkaline.

Include an appropriate equation.

Explanation: .....

.....

Equation:

[2]

(ii) Explain why the Group 2 elements are known as **s block** elements.

.....

..... **[1]**

(b) Strontium sulfate is used in fireworks. Strontium gives a red colour when ignited.

A frequency of red light from the strontium spectrum is 4.62×10^{14} Hz.

Calculate the energy per mole of photons of this frequency in $kJ\,mol^{-1}$.

Give your answer to an **appropriate** number of significant figures.

Energy = ... $kJ\,mol^{-1}$ **[3]**

© OCR 2025

(c) Barium sulfate is very insoluble in water.

(i) Solutions containing sulfate ions give a white precipitate with barium chloride solution.

Write an **ionic** equation for the formation of this white precipitate.

Include state symbols.

[1]

(ii) A solution has $[SO_4^{2-}] = 0.10\,mol\,dm^{-3}$.

Calculate the smallest $[Ba^{2+}]$ in the solution which will just give a white precipitate.

For barium sulfate, $K_{sp} = 1.0 \times 10^{-10}\,mol^2\,dm^{-6}$.

$[Ba^{2+}]$ = ... $mol\,dm^{-3}$ **[2]**

(d) Calcium and potassium are in the same period of the periodic table.

Explain why calcium has the higher melting point.

.....

.....

.....

..... **[2]**

© OCR 2025

(e)* A group of students use the apparatus below to show the trend in thermal stability of the Group 2 carbonates.

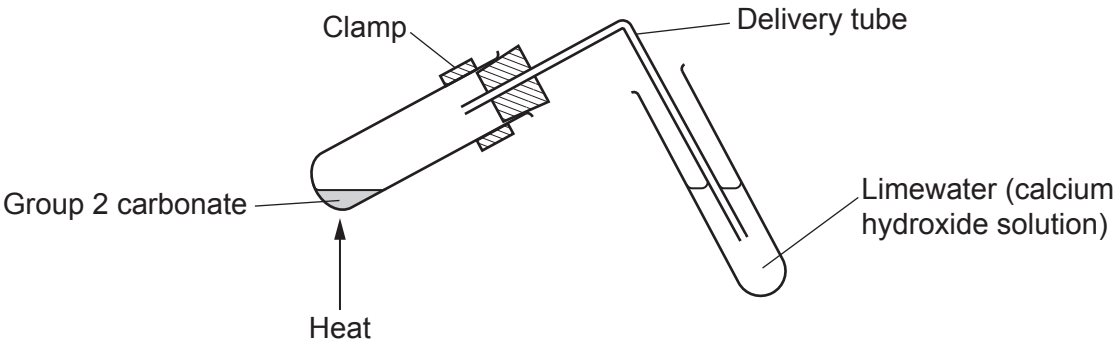

Describe how the students should use this apparatus **safely** to show the trend.

Describe the observations that the students should obtain and explain the theory behind these observations.

.....

.....

.....

.....

.....

.....

.....

.....

.....

.....

.....

.....

.....

..... **[6]**

© OCR 2025

Extra answer space if required.

.....

.....

.....

.....

.....

.....

© OCR 2025

2 This question is about two useful polymers, nylon and polystyrene.

(a) There are several different nylon structures.

One type of nylon can be made in the laboratory by the polymerisation reaction of the two monomers, 1,6-diaminohexane and 'sebacoyl chloride'.

The repeat unit of the nylon formed is shown:

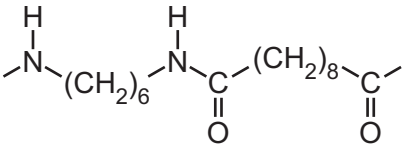

nylon repeat unit

(i) Name the nylon shown in this repeat unit.

..... **[1]**

(ii) The monomer sebacoyl chloride is an acyl chloride.

Draw a **skeletal** formula for sebacoyl chloride.
Use the nylon repeat unit above to help you.

[2]

(b) The monomer styrene is shown:

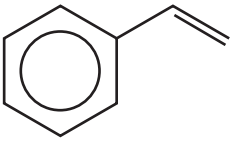

styrene

Styrene polymerises to polystyrene.
This type of polymerisation differs from the type of polymerisation that forms nylon.

Name the **types** of polymerisation that form polystyrene and nylon.
Explain how these types of polymerisation differ.

.....

.....

.....

.....

.....

.....

..... **[4]**

© OCR 2025

(c) The aromatic ring in styrene can be represented by either of the two structures below.

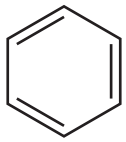

structure A

structure B

(i) Explain, in terms of bond lengths, why **structure A** is a **less** accurate representation than **structure B**.

.....

.....

.....

..... **[2]**

(ii) The aromatic rings in styrene are stabilised by delocalisation.

Explain what **delocalisation** means.

.....

.....

.....

..... **[2]**

© OCR 2025

(d) Styrene can be oxidised to benzoic acid.

Compound **X** can be made from benzoic acid as shown:

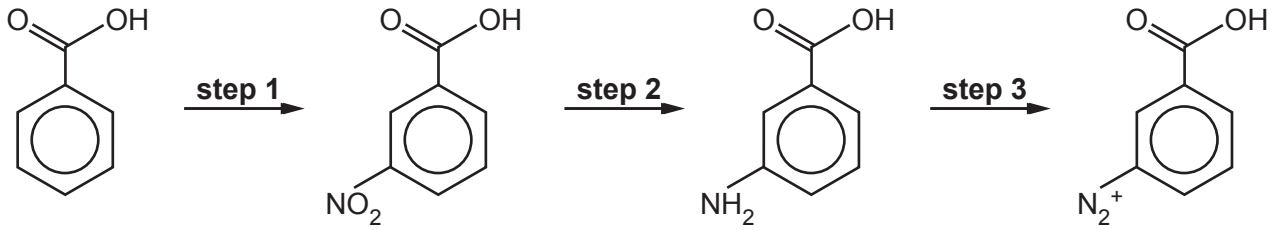

benzoic acid **3-nitrobenzoic acid** **3-aminobenzoic acid** **compound X**

(i) Give the reagents for **steps 1**, **2** and **3**.

(Use the Data Sheet if necessary.)

step 1 .....

step 2 .....

step 3 .....
[3]

(ii) Name the functional group shown at the bottom left in compound **X**.

..... **[1]**

(iii) Suggest a type of useful compound that can be made using compound **X**.

..... **[1]**

© OCR 2025

BLANK PAGE

DO NOT WRITE ON THIS PAGE

Turn over for the next question

© OCR 2025

3 Methanol, CH_3OH, is produced by the chemical industry as a building block for many everyday products.

(a) Methanol can be made industrially from methane by a two-step process.

The **first step** involves the steam reforming of the methane:

$CH_4(g) + H_2O(g) \rightleftharpoons CO(g) + 3H_2(g)$ $\Delta H = +206\,kJ\,mol^{-1}$ **Equation 3.1**

(i) For the forward reaction in **Equation 3.1**, $\Delta_{sys}S = +216\,J\,mol^{-1}\,K^{-1}$.

Explain how **Equation 3.1** shows that the value of $\Delta_{sys}S$ will be positive.

.....

..... **[1]**

(ii) A student says that the forward reaction in **Equation 3.1** is feasible at all temperatures.

Comment on the student's statement, giving the correct chemistry where necessary.

.....

.....

.....

.....

.....

..... **[3]**

© OCR 2025

(b) The **second step** in the manufacture of methanol involves the reaction:

$CO(g) + 2H_2(g) \rightleftharpoons CH_3OH(g)$ $\Delta H = -90\,kJ\,mol^{-1}$ **Equation 3.2**

The process operates at a pressure of 5 MPa and a temperature of 700 K in the presence of a copper-based catalyst.

(i) A mixture containing 3.20 mol of carbon monoxide and 2.50 mol of hydrogen is allowed to reach equilibrium in a container of volume 2.00 dm^3 under the above conditions.
0.488 mol of methanol is formed.

Calculate the value of the equilibrium constant, K_c, for **Equation 3.2** under these conditions.

Give the units.

K_c = ... units .....**[5]**

(ii) Explain, using **Equation 3.2**, why the equilibrium yield of methanol increases with increasing pressure, and suggest why an even higher pressure is **not** used.

.....

.....

.....

.....

.....

..... **[3]**

Question 3(b)(iii) starts on Page 12

© OCR 2025

(iii) A copper-based catalyst is used in the reaction.
Catalysts speed up reactions.

Explain why catalysts only affect the **rate** at which equilibrium is set up and **not** the equilibrium yield.

.....

.....

.....

..... **[2]**

© OCR 2025

BLANK PAGE

DO NOT WRITE ON THIS PAGE

Question 4 starts on Page 14

© OCR 2025

4 This question refers to the **Practical Insert** that is provided with this paper.

(a) In the paperclip solution, IO_4^- ions oxidise Mn^{2+} ions to MnO_4^-, being reduced themselves to IO_3^- ions.

The oxidation and reduction half equations for this reaction are:

$IO_4^- + 2H^+ + 2e^- \rightarrow IO_3^- + H_2O$

$Mn^{2+} + 4H_2O \rightarrow MnO_4^- + 8H^+ + 5e^-$

Write the full ionic equation for the reaction.

[2]

(b)* At the end of **Part 1** of their method, the students have a solution of MnO_4^- in a beaker.

They need to make the solution up to 100.0 cm^3.

How should they do this accurately?

.....

.....

.....

.....

.....

.....

.....

.....

.....

.....

.....

.....

..... **[6]**

© OCR 2025

Extra space if needed.

.....

.....

.....

.....

.....

.....

.....

(c) Explain why a green filter is used in the colorimeter.

.....

.....

.....

..... **[2]**

(d) Use the students' results to calculate the percentage by mass of manganese in a paperclip.

Percentage by mass = ... % **[3]**

END OF QUESTION PAPER

© OCR 2025

EXTRA ANSWER SPACE

If you need extra space use this lined page. You must write the question numbers clearly in the margin.

OCR
Oxford Cambridge and RSA

Copyright Information

OCR is committed to seeking permission to reproduce all third-party content that it uses in its assessment materials. OCR has attempted to identify and contact all copyright holders whose work is used in this paper. To avoid the issue of disclosure of answer-related information to candidates, all copyright acknowledgements are reproduced in the OCR Copyright Acknowledgements Booklet. This is produced for each series of examinations and is freely available to download from our public website (www.ocr.org.uk) after the live examination series.

If OCR has unwittingly failed to correctly acknowledge or clear any third-party content in this assessment material, OCR will be happy to correct its mistake at the earliest possible opportunity.

For queries or further information please contact The OCR Copyright Team, The Triangle Building, Shaftesbury Road, Cambridge CB2 8EA.

OCR is part of Cambridge University Press & Assessment, which is itself a department of the University of Cambridge.

© OCR 2025