Oxford Cambridge and RSA

Monday 12 June 2023 – Morning

A Level Chemistry B (Salters)

H433/01 Fundamentals of Chemistry

Time allowed: 2 hours 15 minutes

You must have:
- the Data Sheet for Chemistry B

You can use:
- a scientific or graphical calculator
- an HB pencil

Please write clearly in black ink. **Do not write in the barcodes.**

Centre number | | | | | | Candidate number | | | | |

First name(s) _____

Last name _____

INSTRUCTIONS
- Use black ink. You can use an HB pencil, but only for graphs and diagrams.
- Write your answer to each question in the space provided. If you need extra space use the lined pages at the end of this booklet. The question numbers must be clearly shown.
- Answer **all** the questions.
- Where appropriate, your answer should be supported with working. Marks might be given for using a correct method, even if your answer is wrong.

INFORMATION
- The total mark for this paper is **110**.
- The marks for each question are shown in brackets **[ ]**.
- Quality of extended response will be assessed in questions marked with an asterisk (*).
- This document has **36** pages.

ADVICE
- Read each question carefully before you start your answer.

© OCR 2023 [601/5371/4]
DC (ST/SG) 317976/4
OCR is an exempt Charity

Section A

You should spend a **maximum** of **40 minutes** on this section.

Write your answer to each question in the box provided.

1 Which row is correct for the properties of substances with the bonding types shown?

	Bonding type	Melting point	Electrical conductivity	
			Solid	Molten
A	covalent network	low	poor	poor
B	ionic	high	good	good
C	metallic	high	poor	good
D	simple molecular	low	poor	poor

Your answer ☐ **[1]**

2 Helium-4 is formed by a nuclear fusion reaction.

$2\,^{3}_{2}He \rightarrow \,^{4}_{2}He$ + ...

What is needed to complete the equation?

A 1 electron

B 1 neutron

C 1 proton

D 2 protons

Your answer ☐ **[1]**

© OCR 2023

3 Which molecule is the most polar?

A CCl_4

B CF_4

C CHF_3

D $CHCl_2F$

Your answer ☐ **[1]**

4 One of the principles of green chemistry in industrial processes involves the use of a selective catalyst.

Which of the following makes a **selective** catalyst 'green'?

A It speeds up the process.

B It improves the atom economy.

C It minimises the use of organic solvents.

D It reduces energy usage and minimises waste product.

Your answer ☐ **[1]**

5 Sodium phosphate(V) has the formula Na_3PO_4.

What is the formula of calcium phosphate(V)?

A $CaPO_4$

B $Ca_2(PO_4)_3$

C Ca_3PO_4

D $Ca_3(PO_4)_2$

Your answer ☐ **[1]**

© OCR 2023

6 A colorimeter is used to measure the concentration of a blue solution of copper(II) sulfate(VI).

Which of the following is correct?

A A blue filter is used.

B A calibration curve is plotted with known concentrations of Cu^{2+}.

C The amount of light transmitted is proportional to the Cu^{2+} concentration.

D The measured absorbance decreases with increasing Cu^{2+} concentration.

Your answer ☐ **[1]**

7 A student studies a reaction that 'goes to completion'.

The student estimates the numerical value of K_c for the reaction.

What is a valid estimate for K_c for this reaction?

A 0

B 1×10^{-10}

C 1

D 1×10^{10}

Your answer ☐ **[1]**

8 Which of the following is correct for gas-liquid chromatography?

A A reactive carrier gas is used.

B The column consists of a volatile liquid on a porous support.

C The emerging compounds can be detected by mass spectrometry.

D The largest molecules usually have the shortest retention times.

Your answer ☐ **[1]**

© OCR 2023

9 Which of the following molecules is linear?

A HCN

B H_2S

C NO_2

D SO_2

Your answer ☐ **[1]**

10 Sodium nitrate(V) is warmed with Devarda's alloy and NaOH(aq).

Which gas is released?

A ammonia

B nitrogen

C nitrogen dioxide

D nitrogen monoxide

Your answer ☐ **[1]**

11 Which row shows the number of sigma (σ) and pi (π) bonds in one molecule of buta-1,3-diene, $CH_2{=}CHCH{=}CH_2$?

	Sigma (σ) bonds	**Pi (π) bonds**
A	7	2
B	7	4
C	9	2
D	9	4

Your answer ☐ **[1]**

© OCR 2023

12 Which combination of organic molecules can be formed during the cracking of octane?

A propane + pentane

B propene + pentane

C propene + pent-1-ene

D 2 molecules of butane

Your answer ☐ **[1]**

13 Which of the following compounds can display *E*/*Z* isomerism?

A $CH_2BrCH{=}CHCH_2Br$

B $(CH_3CH_2)_2C{=}CBr_2$

C $(CH_2Br)_2C{=}CH_2$

D $CH_2BrCH_2BrCH{=}CH_2$

Your answer ☐ **[1]**

14 Which row is possible for a transition metal complex?

	Shape	**Bond angle**	**Co-ordination number**
A	octahedral	90°	8
B	octahedral	120°	6
C	square planar	90°	4
D	tetrahedral	120°	4

Your answer ☐ **[1]**

© OCR 2023

15 What is the correct order of boiling points for CH_3CH_2OH, CH_3CHO and CH_3COOH?

A CH_3CHO > CH_3CH_2OH > CH_3COOH

B CH_3COOH > CH_3CH_2OH > CH_3CHO

C CH_3CH_2OH > CH_3COOH > CH_3CHO

D CH_3CH_2OH > CH_3CHO > CH_3COOH

Your answer ☐ **[1]**

16 Which compound can undergo an elimination reaction to produce an alkene?

A $(CH_3)_3CH$

B C_6H_5OH

C $C_6H_5CH_2OH$

D $CH_3CH(CH_3)CH_2OH$

Your answer ☐ **[1]**

17 An organic liquid is being purified. The liquid does not mix with water and contains a small aqueous acidic impurity.

What is the correct order for the following stages in the purification?

	shake with $Na_2CO_3(aq)$	**dry with $Na_2SO_4(s)$**	**distil**
A	1st	2nd	3rd
B	2nd	3rd	1st
C	3rd	1st	2nd
D	3rd	2nd	1st

Your answer ☐ **[1]**

© OCR 2023

18 10 cm^3 of pentane gas is burned in 100 cm^3 of oxygen at constant pressure and 390 K.

$C_5H_{12} + 8O_2 \rightarrow 5CO_2 + 6H_2O$

What volume of gas is present when all the pentane has burned under these conditions?

A 50 cm^3

B 110 cm^3

C 130 cm^3

D 138 cm^3

Your answer ☐ **[1]**

19 Which statement is correct for the Group 1 chlorides, going down the group?

A The charge density of the anion becomes smaller.

B The charge density of the cation becomes greater.

C The hydration energy of the cation becomes less exothermic.

D The lattice enthalpy becomes more exothermic.

Your answer ☐ **[1]**

20 10 cm^3 of 0.30 mol dm^{-3} $AgNO_3$ is mixed with 20 cm^3 of 0.10 mol dm^{-3} NaC*l*.

What is the maximum mass (in grams) of silver chloride (M_r = 143) that could be formed?

A 0.13

B 0.29

C 0.43

D 0.71

Your answer ☐ **[1]**

© OCR 2023

21 The following equations represent reactions for making hydrogen from water.

Which reaction produces hydrogen with the greatest atom economy?

A $C + H_2O \rightarrow H_2 + CO$

B $CO + H_2O \rightarrow H_2 + CO_2$

C $CH_4 + H_2O \rightarrow 3H_2 + CO$

D $CH_4 + 2H_2O \rightarrow 4H_2 + CO_2$

Your answer ☐ **[1]**

22 A student plots a graph of $\ln k$ (y-axis) against $1/T$ for a reaction. The student draws the straight line of best fit.

The Arrhenius equation is $\ln k = -E_a/RT + \ln A$

Which statement is correct?

A The graph shows that $\ln k$ is proportional to T.

B The intercept of the line on the y-axis is $\ln A$.

C The slope of the line is E_a/RT.

D When $T = 0$, $\ln k = \ln A$.

Your answer ☐ **[1]**

23 What is correct about the structure of DNA?

A Guanine is paired with Adenine.

B The repeating units in the backbone are deoxyribose-phosphate-deoxyribose-phosphate.

C The bases are joined by condensation to phosphate groups.

D The bases involved are represented as A C G and U.

Your answer ☐ **[1]**

© OCR 2023

24 The data below is for the dissolving of $MgCl_2$ in water.

	kJ mol^{-1}
Lattice enthalpy of $MgCl_2(s)$	–2526
Enthalpy change of hydration of $Mg^{2+}(g)$	–1926
Enthalpy change of hydration of $Cl^-(g)$	–378

What is the enthalpy change of solution of $MgCl_2$ in kJ mol^{-1}?

A –222

B –156

C +156

D +222

Your answer ☐ **[1]**

25 A student records the following readings for a titration:

	Trial	**1**	**2**	**3**
2nd burette reading / cm^3	20.45	40.80	40.45	20.50
1st burette reading / cm^3	0.20	20.50	20.40	0.35
Volume / cm^3	20.25	20.30	20.05	20.15

What should the student record as the result of the titration?

A 20.10 cm^3

B 20.17 cm^3

C 20.19 cm^3

D 20.28 cm^3

Your answer ☐ **[1]**

© OCR 2023

26 What is the amount (in moles) of a gas that occupies 23 dm^3 at 1.0×10^5 Pa and 293 K?

A 0.94 mol

B 1.4 mol

C 14 mol

D 94 mol

Your answer ☐ **[1]**

27 The solubility product of silver carbonate, Ag_2CO_3, is p $mol^3 dm^{-9}$ at 298 K.

The solubility of silver carbonate is s mol dm^{-3} at 298 K.

Which equation is correct?

A $p = 3s$

B $p = 2s^2$

C $p = 2s^3$

D $p = 4s^3$

Your answer ☐ **[1]**

28 Which of these would cause an increased greenhouse effect?

1 an increased concentration of CO_2 in the troposphere

2 less UV from the Sun reaching the Earth

3 the Earth radiating less IR

A 1, 2 and 3

B Only 1 and 2

C Only 2 and 3

D Only 1

Your answer ☐ **[1]**

© OCR 2023

29 Which statement(s) is/are correct for a Friedel-Crafts alkylation reaction?

1 An alkyl group bonds with a benzene ring by an addition reaction.

2 $AlCl_3$ is used as a catalyst.

3 A chloroalkane forms a carbocation during the reaction.

A 1, 2 and 3

B Only 1 and 2

C Only 2 and 3

D Only 1

Your answer ☐ **[1]**

30 Iodine is soluble in hexane.

Which of the following is/are reason(s) that it dissolves?

1 Instantaneous dipole – induced dipole bonds of similar strength are broken and made.

2 The I – I covalent bond is weak.

3 Iodine and hexane both have permanent dipole – permanent dipole bonds.

A 1, 2 and 3

B Only 1 and 2

C Only 2 and 3

D Only 1

Your answer ☐ **[1]**

© OCR 2023

BLANK PAGE

DO NOT WRITE ON THIS PAGE

Turn over for Section B

© OCR 2023

Section B

31 This question is about Group 2 elements and their compounds.

(a) Strontium is one of the elements in Group 2. Compounds of strontium are used in fireworks to give a crimson colour.

Analysis of the mass spectrum of a sample of strontium gives the data shown below.

Relative isotopic mass	Relative abundance / %
84	0.56
86	9.86
87	7.00
88	82.58

Use this data to calculate the relative atomic mass, A_r, of this sample of strontium.

Give your answer to **2** decimal places.

A_r of strontium = ... **[2]**

© OCR 2023

(b) The atomic emission spectrum of strontium shows a series of coloured lines against a black background.

The diagram shows the line of shortest frequency in the spectrum and the electron energy change causing it.

Complete the diagram to show the relationship between the next **two** lines in the spectrum and the corresponding energy changes.

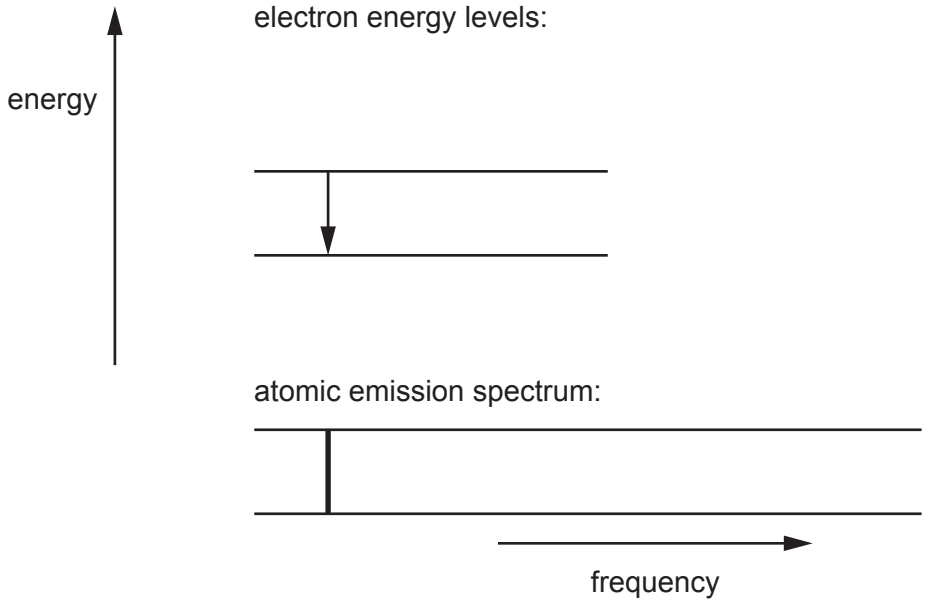

[3]

(c) A student has three test tubes, each containing the same volume and concentration of a different solution.

- One test tube contains aqueous calcium nitrate.
- One test tube contains aqueous strontium nitrate.
- One test tube contains aqueous barium nitrate.

The student adds an equal volume of aqueous sodium hydroxide to each test tube. A white precipitate forms rapidly in the test tube containing calcium nitrate.

Describe and explain the **trend** in what the student would observe in the other **two** test tubes.

.....

.....

.....

..... **[2]**

© OCR 2023

(d) Another student uses a roaring Bunsen flame to heat a small sample of calcium carbonate in a test tube. The gas given off is bubbled through lime water.

After about 1 minute the lime water is white and cloudy.

(i) Write an equation for the reaction that occurs when the calcium carbonate is heated.

Include state symbols.

[1]

(ii) Carbonates of metals below calcium in Group 2 are heated under the same conditions. The lime water becomes cloudy after different amounts of time.

Describe and explain the **trend** in thermal stabilities of the Group 2 carbonates.

.....

.....

.....

.....

.....

..... **[3]**

(e) Barium chloride solution is used as a test for the sulfate ion.

Write an ionic equation for the reaction that occurs when this test is done.

Include state symbols.

[2]

© OCR 2023

32 The impact of climate change is driving the development of replacements for fossil fuels. Crude oil currently remains a source of hydrocarbons, some of which can be used as fuels.

(a) Octane, C_8H_{18}, is one of the alkane hydrocarbons present in petrol.

For maximum fuel efficiency, petrol should burn completely. However, some incomplete combustion usually takes place.

Write an equation for the incomplete combustion of octane that forms carbon monoxide as the only carbon compound.

[1]

(b) 2,2,3-trimethylpentane is a structural isomer of octane.

Draw the **skeletal** formula for 2,2,3-trimethylpentane.

[1]

© OCR 2023

(c) Ethanol is often added to petrol to improve combustion.

A student wishes to measure the enthalpy change of combustion of ethanol.

The student carries out a simple method.

Step 1 Some water is measured into a copper can.
Step 2 The initial temperature of the water in the can is measured.
Step 3 The initial mass of a spirit burner containing ethanol is measured.
Step 4 The spirit burner is placed under the can which is held above it using a clamp.
Step 5 The wick of the spirit burner is lit.
Step 6 After heating the water in the can, the flame is blown out.
Step 7 The final temperature of the water is measured.
Step 8 The final mass of the spirit burner is measured.

The results are recorded in **Table 32.1**.

Table 32.1

Mass of water used / g	250
Mass of ethanol burned / g	2.73
Initial temperature of water / °C	16.5
Final temperature of water / °C	52.0

(i) Use the results in **Table 32.1** to calculate a value for the enthalpy change of combustion, $\Delta_c H$, of ethanol, C_2H_5OH, in $kJ\,mol^{-1}$.

$\Delta_c H$ of ethanol = ... $kJ\,mol^{-1}$ **[3]**

© OCR 2023

(ii) The student found that the value of $\Delta_c H$ obtained using this method was considerably less exothermic than that in a data book.

State **two** sources of error in the student's method.

Describe a correction for each.

Error 1 .....

.....

Correction 1 .....

.....

Error 2 .....

.....

Correction 2 .....

.....

[4]

© OCR 2023

(d) A value for the enthalpy change of combustion of ethanol can also be calculated using the average bond enthalpy values given in **Table 32.2**.

Table 32.2

Bond	Average bond enthalpy / kJ mol^{-1}
C–C	+347
C–O	+358
C–H	
O–H	+464
C=O	+805
O=O	+498

(i) Why are the bond enthalpies in **Table 32.2** described as average values?

.....

..... **[1]**

(ii) The larger bond enthalpy of C=O compared with C–O implies that the C=O bond is shorter.

Explain why double bonds are shorter than single bonds between the same atoms.

.....

.....

.....

..... **[2]**

© OCR 2023

(iii) The equation for the combustion of ethanol is shown below:

$C_2H_5OH + 3O_2 \rightarrow 2CO_2 + 3H_2O \quad \Delta_c H = -1367\,kJ\,mol^{-1}$ **Equation 32.1**

Use the data in **Table 32.2** and the value of $\Delta_c H$ from **Equation 32.1**, to calculate a value for the average bond enthalpy for the C–H bond in $kJ\,mol^{-1}$.

average bond enthalpy for C–H bond = ... $kJ\,mol^{-1}$ **[3]**

(e) The ethanol that is mixed with fossil fuels in petrol can be made by fermentation of crops.

A student says that this ethanol is carbon neutral in petrol.

Discuss this statement.

.....

.....

.....

.....

.....

..... **[3]**

© OCR 2023

33 Citric acid is a weak acid that is present in many fruits. The addition of citrate salts to fruit-based products such as jams forms buffer solutions in the products.

(a) A student uses citric acid, $C_3H_5O(COOH)_3$, to prepare a sample of sodium citrate, $C_3H_5O(COONa)_3$ as shown in **Equation 33.1**.

$C_3H_5O(COOH)_3 + 3NaOH \rightarrow C_3H_5O(COONa)_3 + 3H_2O$ **Equation 33.1**

The M_r of citric acid is 192.

The student uses 4.80 g of citric acid and obtains 5.18 g of sodium citrate.

(i) Calculate the percentage yield in this salt preparation.

percentage yield = ... % **[2]**

(ii) The pH of the sodium hydroxide solution used in this salt preparation is 13.46 at 25 °C.

Calculate the concentration of the sodium hydroxide solution.

concentration of sodium hydroxide = ... mol dm^{-3} **[2]**

(b) Buffer solutions are also important in living systems. For example, human blood needs to be maintained at a pH between 7.35 and 7.45.

The buffering action in blood involves the equilibrium as represented by **Equation 33.2**.

$H_2CO_3(aq) \rightleftharpoons H^+(aq) + HCO_3^-(aq)$ **Equation 33.2**

(i) Identify the Brønsted-Lowry acid and conjugate base in **Equation 33.2**.

Brønsted-Lowry acid .....

Conjugate base .....

[1]

© OCR 2023

(ii) Using **Equation 33.2**, explain how this buffer solution maintains its pH when small amounts of acid and alkali are added.

.....

.....

.....

.....

.....

.....

.....

..... **[4]**

(iii) At body temperature, healthy blood at a pH of 7.40 has a concentration ratio

$$\frac{HCO_3^-}{H_2CO_3} = 11.3$$

If the pH falls below 7.35, a condition known as acidosis may develop which can cause shortness of breath and, in extreme cases, death.

Calculate the concentration ratio of $\frac{HCO_3^-}{H_2CO_3}$ in a patient with a blood pH of 7.20.

concentration ratio of $\frac{HCO_3^-}{H_2CO_3}$ = ... **[4]**

© OCR 2023

34 Electrode potentials are used to investigate redox reactions.

Standard electrode potentials for a range of redox half-cells are shown in **Table 34.1**.

Table 34.1

redox half-cell	half-equation	$E^{\ominus}$/V
1	$Zn^{2+}(aq) + 2e^- \rightleftharpoons Zn(s)$	–0.76
2	$Fe^{2+}(aq) + 2e^- \rightleftharpoons Fe(s)$	–0.44
3	$Sn^{2+}(aq) + 2e^- \rightleftharpoons Sn(s)$	–0.14
4	$2H^+(aq) + 2e^- \rightleftharpoons H_2(g)$	0.00
5	$\frac{1}{2}O_2(g) + H_2O(l) + 2e^- \rightleftharpoons 2OH^-(aq)$	+0.40
6	$Fe^{3+}(aq) + e^- \rightleftharpoons Fe^{2+}(aq)$	+0.77
7	$Cr_2O_7^{2-}(aq) + 14H^+(aq) + 6e^- \rightleftharpoons 2Cr^{3+}(aq) + 7H_2O(l)$	+1.33
8	$Cl_2(aq) + 2e^- \rightleftharpoons 2Cl^-(aq)$	+1.36
9	$MnO_4^-(aq) + 8H^+(aq) + 5e^- \rightleftharpoons Mn^{2+}(aq) + 4H_2O(l)$	+1.51

(a) A student sets up an electrochemical cell in the laboratory based on redox half-cells **1** and **6**.

(i) Complete the labelled diagram to show the student's cell.

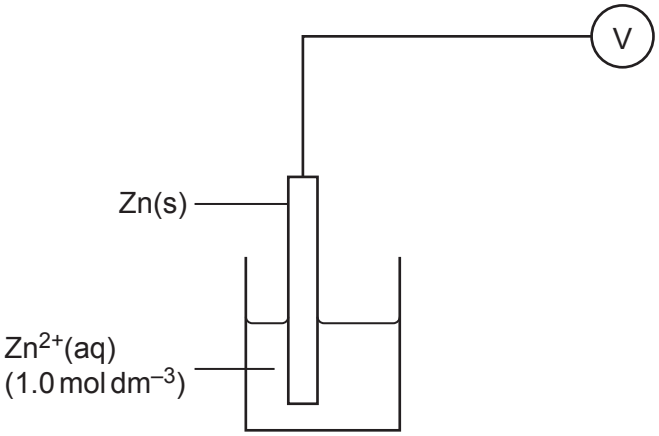

[3]

© OCR 2023

(ii) Use the data in **Table 34.1** to calculate $E^{\ominus}_{cell}$ for the student's electrochemical cell.

$E^{\ominus}_{cell}$ = ... V **[1]**

(iii) State the **types** of particle that cause the transfer of charge through the wire and the solutions.

The wire .....

The solutions .....
[2]

(b) Standard electrode potentials can be used to explain how some metals protect iron from rusting.

A thin coating of zinc on the surface of iron will provide protection from rusting even when the zinc coating becomes scratched. However, a scratched thin coating of tin will not protect the surface.

Use the data in **Table 34.1** to explain these observations.

.....

.....

.....

.....

.....

..... **[3]**

© OCR 2023

(c)* The analysis of iron(II) compounds can be carried out using manganate(VII) redox titrations.

$MnO_4^-(aq) + 5Fe^{2+}(aq) + 8H^+(aq) \rightarrow Mn^{2+}(aq) + Fe^{3+}(aq) + 4H_2O(l)$

- 5.88 g of an alloy containing iron are dissolved in dilute sulfuric acid.
- The resulting Fe^{2+} solution is completely transferred into a 0.250 dm^3 volumetric flask and made up to the mark.
- 25.0 cm^3 of the Fe^{2+} solution requires a mean titre of 20.80 cm^3 of 0.0200 mol dm^{-3} potassium manganate(VII).

Describe, giving practical details, how the titration is carried out and use the information to calculate the percentage by mass of iron in the alloy, giving your answer to an **appropriate** number of significant figures.

.....

.....

.....

.....

.....

.....

.....

.....

.....

.....

.....

.....

.....

.....

.....

..... **[6]**

Additional answer space if required

.....

.....

.....

.....

© OCR 2023

Table 34.1 is repeated below:

Table 34.1

redox half-cell	half-equation	$E°$/V
1	$Zn^{2+}(aq) + 2e^- \rightleftharpoons Zn(s)$	–0.76
2	$Fe^{2+}(aq) + 2e^- \rightleftharpoons Fe(s)$	–0.44
3	$Sn^{2+}(aq) + 2e^- \rightleftharpoons Sn(s)$	–0.14
4	$2H^+(aq) + 2e^- \rightleftharpoons H_2(g)$	0.00
5	$\frac{1}{2}O_2(g) + H_2O(l) + 2e^- \rightleftharpoons 2OH^-(aq)$	+0.40
6	$Fe^{3+}(aq) + e^- \rightleftharpoons Fe^{2+}(aq)$	+0.77
7	$Cr_2O_7^{2-}(aq) + 14H^+(aq) + 6e^- \rightleftharpoons 2Cr^{3+}(aq) + 7H_2O(l)$	+1.33
8	$Cl_2(aq) + 2e^- \rightleftharpoons 2Cl^-(aq)$	+1.36
9	$MnO_4^-(aq) + 8H^+(aq) + 5e^- \rightleftharpoons Mn^{2+}(aq) + 4H_2O(l)$	+1.51

(d) A student carries out the analysis described in **part (c)** but uses hydrochloric acid instead of sulfuric acid to dissolve the sample of the alloy.

Using the data in **Table 34.1**, predict and explain the effect of this change of acid on the titre of potassium manganate(VII).

.....

.....

.....

..... **[2]**

© OCR 2023

35 When developing vaccines against viruses, scientists need to understand the chemistry of the virus spike protein. One type of vaccine contains the messenger RNA so that cells can produce the spike proteins themselves and develop immune reactions to them.

(a) One section of mRNA contains the sequence .....GGUGCC.... that codes for glycine and alanine.

Explain how this mRNA sequence enables these two amino acids to form the correct primary structure in a protein.

.....

.....

.....

..... **[2]**

(b) All amino acids apart from glycine, H_2NCH_2COOH, show optical isomerism.

(i) Describe the feature of the amino acid structure that allows optical isomerism to occur.

.....

..... **[1]**

(ii) Draw two diagrams that show the 3-D relationship between the optical isomers of alanine, $H_2NCH(CH_3)COOH$.

mirror

[2]

© OCR 2023

(c) The primary structure of a protein is the order in which the amino acid residues are bonded together.

Draw a structural formula to show a dipeptide that can be formed when alanine, $H_2NCH(CH_3)COOH$, and serine, $H_2NCH(CH_2OH)COOH$, bond together.

Draw a circle around the peptide link.

[2]

(d) A student dissolves some solid alanine in distilled water and finds the pH is 6.0.

The student then divides this solution into two separate beakers.

To one beaker the student adds ten drops of dilute hydrochloric acid, and to the other beaker ten drops of dilute sodium hydroxide.

The student finds that the pH of both solutions remains at 6.0.

(i) The formula of the species present in the aqueous solution of alanine is $H_3N^+CH(CH_3)COO^-$.

Name this type of species.

..... **[1]**

(ii) Write equations for the reactions that occur in the two beakers.

Equation for reaction with acid (H_3O^+).

Equation for reaction with alkali (OH^-).

[2]

© OCR 2023

(e) The secondary structure of a protein is held together by hydrogen bonds.

Fig. 35.1, shows hydrogen bonding between neighbouring peptide chains in a sheet-type secondary structure.

Fig. 35.1

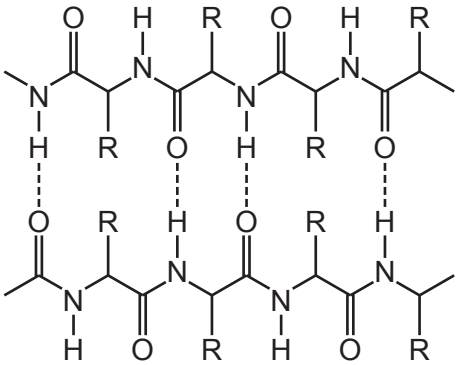

Describe and explain how a hydrogen bond forms in **Fig. 35.1**.

.....

.....

.....

.....

.....

..... **[3]**

© OCR 2023

(f)* Enzymes are proteins that catalyse certain reactions. They can be used by viruses to infect cells.

The rates of enzyme-catalysed reactions typically vary with substrate concentration as shown in the graph in **Fig. 35.2**.

Fig. 35.2

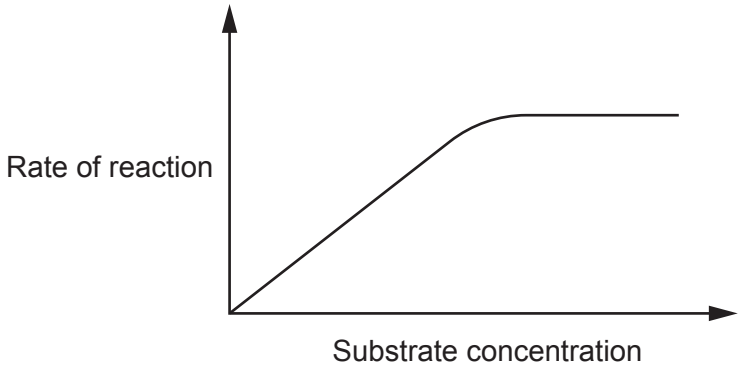

The mechanism of an enzyme-catalysed reaction can be written:

$E + S \rightarrow ES \rightarrow EP \rightarrow E + P$

State the meaning of the symbols used in the mechanism and explain how this mechanism accounts for the shape of the curve in **Fig. 35.2**. **[6]**

.....

.....

.....

.....

.....

.....

.....

.....

.....

.....

.....

.....

© OCR 2023

.....

.....

.....

Additional answer space if required

.....

.....

.....

.....

.....

.....

END OF QUESTION PAPER

© OCR 2023

ADDITIONAL ANSWER SPACE

If additional space is required, you should use the following lined page(s). The question number(s) must be clearly shown in the margin(s).

© OCR 2023

© OCR 2023

© OCR 2023

OCR
Oxford Cambridge and RSA

Copyright Information

OCR is committed to seeking permission to reproduce all third-party content that it uses in its assessment materials. OCR has attempted to identify and contact all copyright holders whose work is used in this paper. To avoid the issue of disclosure of answer-related information to candidates, all copyright acknowledgements are reproduced in the OCR Copyright Acknowledgements Booklet. This is produced for each series of examinations and is freely available to download from our public website (www.ocr.org.uk) after the live examination series.

If OCR has unwittingly failed to correctly acknowledge or clear any third-party content in this assessment material, OCR will be happy to correct its mistake at the earliest possible opportunity.

For queries or further information please contact The OCR Copyright Team, The Triangle Building, Shaftesbury Road, Cambridge CB2 8EA.

OCR is part of Cambridge University Press & Assessment, which is itself a department of the University of Cambridge.

© OCR 2023