Oxford Cambridge and RSA

Friday 16 October 2020 – Morning

A Level Biology B (Advancing Biology)

H422/02 Scientific literacy in biology

Time allowed: 2 hours 15 minutes

You must have:
- the Insert
- a clean copy of the Advance Notice (inside this document)

You can use:
- a scientific or graphical calculator
- a ruler (cm/mm)

Please write clearly in black ink. **Do not write in the barcodes.**

Centre number | | | | | | Candidate number | | | | |

First name(s) _____

Last name _____

INSTRUCTIONS
- Use black ink. You may use an HB pencil for graphs and diagrams.
- Write your answer to each question in the space provided. If you need extra space use the lined pages at the end of this booklet. The question numbers must be clearly shown.
- Answer **all** the questions.
- Where appropriate, your answer should be supported with working. Marks might be given for using a correct method, even if your answer is wrong.

INFORMATION
- The total mark for this paper is **100**.
- The marks for each question are shown in brackets **[ ]**.
- Quality of extended response will be assessed in questions marked with an asterisk (*).
- This document has **20** pages.

ADVICE
- Read each question carefully before you start your answer.

© OCR 2020 [601/4720/9]
DC (ST/CT) 190612/5
OCR is an exempt Charity

Answer **all** the questions.

1 This question is based on the Advance Notice article **'Mitochondrial DNA and Mitochondrial Disease'**, on the **Insert**.

(a) Mitochondrial DNA (mtDNA) is much smaller than nuclear DNA and is similar to prokaryotic DNA.

(i) Give **two** ways, apart from size, in which mtDNA differs from nuclear DNA.

1. .....

.....

2. .....

.....

[2]

(ii) Complete the following table of comparisons between mtDNA, RNA and ATP. Put a tick (✓) in each box where that component is present.

The first line has been completed for you.

Component	mtDNA	RNA	ATP
adenine	✓	✓	✓
ribose			
uracil			
pyrimidine			

[3]

(iii) The mitochondrial genome contains 37 genes. Of these, only 13 code for proteins.

Suggest what the remaining genes encode.

..... **[1]**

© OCR 2020

(b) Like replication of nuclear DNA, replication of mtDNA is semi-conservative.

(i) Explain what is meant by the term semi-conservative replication.

.....

.....

.....

.....

..... **[2]**

(ii) Explain how mutations in the catalytic and exonuclease regions of the *POLG* gene could have different effects on the replication of mtDNA.

.....

.....

.....

.....

..... **[2]**

(c) Sequencing the mitochondrial genome has helped our understanding of the function of mitochondria and the basis of mitochondrial disease.

PCR is used to amplify the mtDNA in a sample before sequencing.

(i) In PCR, the DNA is placed in a buffered solution in a thermocycler.

State the **three** other components that are placed in the buffered solution in PCR.

1. .....

2. .....

3. .....

[3]

(ii) A sample contained 1500 molecules of mtDNA.

Calculate the number of mtDNA molecules you would expect after 15 cycles of PCR.

Express your answer as a $\log_{10}$ value.

number of molecules = ... **[2]**

© OCR 2020

(iii) Place the events, **A** to **G**, in the correct order in the boxes below to describe the process of gel electrophoresis. The first one is done for you.

A DNA fragments are placed in wells by the cathode

B when the current is stopped, shorter fragments will finish nearer the anode

C UV light can be used to visualise banding patterns

D a current is applied

E the gel plate is covered in buffer solution

F DNA fragments can be extracted for further analysis

G the DNA fragments begin moving towards the anode

E						

[4]

(d) The Advance Notice article describes the causes and symptoms of mitochondrial disease.

Explain why raised concentrations of lactate confirm diagnosis of mitochondrial disease.

.....

.....

.....

.....

..... **[2]**

© OCR 2020

2 **(a)** Type 1 and type 2 diabetes have different treatments.

(i) Compare the treatments for type 1 and type 2 diabetes.

.....

.....

.....

.....

.....

.....

..... **[3]**

(ii) Explain why measurement of the concentration of glycosylated haemoglobin is used to evaluate how well a patient's blood glucose concentration has been controlled.

.....

.....

.....

.....

..... **[2]**

© OCR 2020

(b) Diabetes can lead to the development of a disease called retinopathy, which involves damage to the retina.

Some doctors have suggested that hypertension increases the risk of retinopathy in patients with type 1 diabetes.

A clinical trial was carried out to investigate the effect of blood pressure on the risk of developing retinopathy.

Two groups of patients with type 1 diabetes were selected and treated as follows:

- the test group of 231 patients received lisinopril, a drug that reduces hypertension
- the control group of 228 patients received a placebo

Both groups were monitored for a period of 24 months. Their blood pressure and glycosylated haemoglobin concentrations were measured regularly.

The results of the trial are shown in the table.

	Number of patients who developed retinopathy or whose retinopathy worsened	**Number of patients whose retinopathy improved**	**Mean blood pressure at start of trial**	**Mean blood pressure at end of trial**
Test group (lisinopril)	21	33	$\frac{123}{81}$	$\frac{120}{80}$
Control group (placebo)	39	28	$\frac{123}{81}$	$\frac{123}{81}$

(i) Name an instrument used to measure blood pressure.

..... **[1]**

(ii) Calculate the percentage decrease in the systolic blood pressure in the test group over the course of the trial.

percentage decrease = ... % **[2]**

© OCR 2020

(iii)* The doctors running the clinical trial concluded that lisinopril had beneficial effects on retinopathy caused by type 1 diabetes.

Evaluate this conclusion.

In your answer, suggest what additional information the doctors would need to be more confident in their conclusion.

.....

.....

.....

.....

.....

.....

.....

.....

.....

.....

.....

.....

.....

.....

..... **[6]**

Additional answer space if required.

.....

.....

.....

.....

.....

© OCR 2020

(c) One factor that contributes to damage to the retina is macular oedema, which is swelling in the eye.

Use your knowledge of tissue fluid formation to explain how hypertension could increase the incidence of oedema.

.....

.....

.....

.....

.....

.....

.....

..... **[3]**

(d) A researcher collected data for the incidence of hypertension and type 2 diabetes in a population.

(i) Describe how the researcher could test for correlation between hypertension and type 2 diabetes.

.....

.....

.....

.....

..... **[2]**

(ii) The researcher found that there was a positive correlation between hypertension and type 2 diabetes.

As a result, they concluded that type 2 diabetes was caused by hypertension.

Explain why the researcher's conclusion may not have been correct.

.....

.....

.....

.....

..... **[2]**

© OCR 2020

3 **(a)** Fig. 3.1 outlines the two stages of photosynthesis.

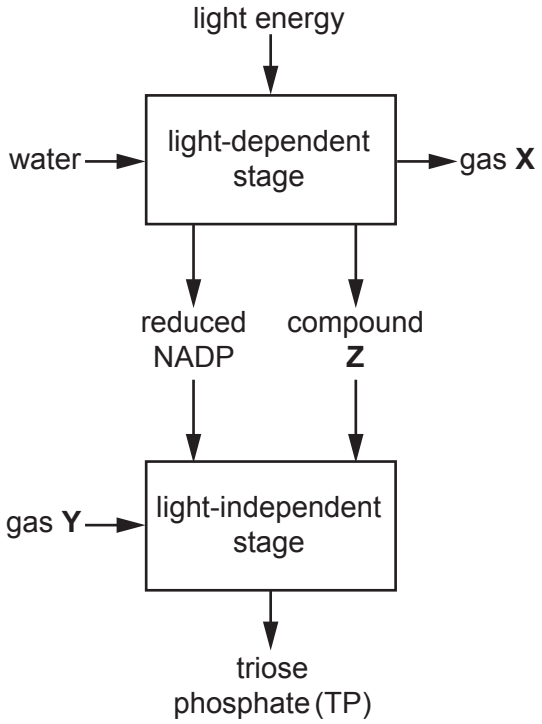

Fig. 3.1

(i) Identify the following from Fig. 3.1:

gas **X** .....

gas **Y** .....

compound **Z** .....

[2]

(ii) Name the structure in the chloroplast in which the light-dependent stage of photosynthesis takes place.

..... **[1]**

(iii) Describe **two** ways in which the structure you named in **(ii)** is adapted to its function.

.....

.....

.....

.....

..... **[2]**

© OCR 2020

(b) A student used paper chromatography to analyse a mixture of photosynthetic pigments.

Fig. 3.2 shows the chromatogram produced. The student numbered each spot and marked the position of the centre of each spot with a pencil mark to help with measurement.

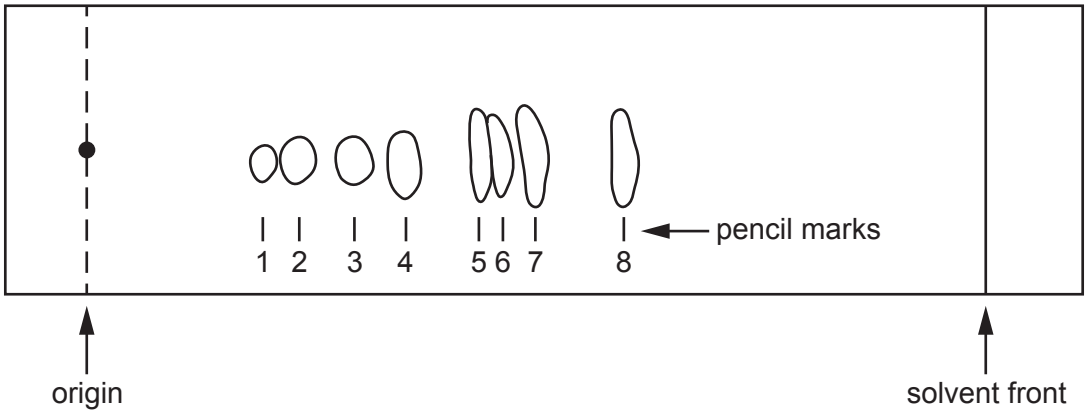

Fig. 3.2

(i) Explain why the student did not allow the solvent to reach the end of the paper.

.....

.....

..... **[1]**

(ii) Calculate the R_f value for spot 5.

Give your answer to **two** significant figures.

R_f = ... **[2]**

(iii) The student had a table of R_f values. However, these values were determined using a different solvent mixture than the one used by the student.

Explain why using this table of values might lead to incorrect identification of the pigments.

.....

.....

.....

.....

..... **[2]**

© OCR 2020

(c) When light energy is absorbed by photosynthetic pigments it causes electrons to be excited to a higher energy level.

(i) Explain how energy from the excited electrons is transferred to ATP.

.....

.....

.....

.....

.....

.....

.....

.....

.....

..... **[4]**

(ii) Suggest **two** reasons why the transfer of energy from excited electrons to ATP is not 100% efficient.

1. .....

.....

2. .....

.....
[2]

© OCR 2020

4 **(a)** Fig. 4, **on the Insert**, shows a photomicrograph of a blood smear.

(i) Identify the three different types of leucocytes labelled **A**, **B** and **C** on Fig. 4.

A .....

B .....

C .....
[3]

(ii) State one structural feature of the cell labelled **D** in Fig. 4 that is different to other eukaryotic cells.

..... **[1]**

(b) A sample of blood was diluted by taking 0.001 cm^3 of blood and making up to a total volume of 1.5 cm^3.

The number of erythrocytes in the diluted sample was counted using a haemocytometer of depth 0.1 mm.

There were 15 cells in a 0.2 mm square.

(i) Suggest **one** thing you would do when diluting the blood sample to ensure that the number of erythrocytes is calculated accurately.

.....

..... **[1]**

(ii) Calculate the total concentration of erythrocytes in the undiluted blood sample.

Give your answer as cells cm^{-3} in standard form.

concentration = ... cells cm^{-3} **[4]**

© OCR 2020

5 **(a)** Fig. 5.1, **on the Insert**, shows an image of a culture of bacteria growing on agar in a petri dish.

(i) A student concluded that there were two different species of bacteria in the culture.

Evaluate the student's conclusion.

.....

.....

.....

.....

.....

.....

.....

..... **[3]**

© OCR 2020

(ii)* Outline a practical procedure to obtain pure cultures of the bacterial species growing on the plate in Fig. 5.1.

In your answer you should include the steps you would take to avoid contamination and confirm the purity of the cultures produced.

.....

.....

.....

.....

.....

.....

.....

.....

.....

.....

.....

.....

.....

.....

..... **[6]**

Additional answer space if required.

.....

.....

.....

.....

.....

© OCR 2020

(b) Fig. 5.2, **on the Insert**, shows a photomicrograph of bacteria that have been stained with Gram stain.

(i) Explain what can be concluded about the types of bacteria present in this culture.

.....

.....

.....

.....

..... **[2]**

(ii) Describe how Gram stain changes the colour of bacterial cells.

.....

.....

.....

.....

..... **[2]**

© OCR 2020

(c) A student investigated the effect of different antibiotics on the growth of bacteria.

They prepared two agar plates:
- Plate 1 was inoculated with a non-pathogenic strain of *E. coli* (a Gram-negative bacterium).
- Plate 2 was inoculated with a non-pathogenic strain of *S. aureus* (a Gram-positive bacterium).

Discs of filter paper were soaked in either an antibiotic solution or distilled water. The discs were then placed on the surface of each plate.

The plates were incubated for 48 hours and the zone of inhibition around each disc was measured.

The results are shown in the table.

Solution on filter paper	**Zone of inhibition (mm)**	
	Plate 1 (*E. coli*)	**Plate 2 (*S. aureus*)**
Water	0	0
Penicillin	2	16
Polymyxin B	15	1
Tetracycline	15	14

The student made the following conclusions:

1. Penicillin and Polymyxin B are both narrow-spectrum antibiotics.
2. Tetracycline is a broad-spectrum antibiotic.
3. Penicillin is active only against Gram-positive bacteria.
4. Polymyxin B is active only against Gram-negative bacteria.
5. Tetracycline is a bacteriostatic antibiotic whereas penicillin and polymyxin B are both bactericidal antibiotics.

(i) Evaluate the student's conclusions.

.....

.....

.....

.....

.....

.....

.....

..... **[3]**

© OCR 2020

(ii) Describe **two** improvements that could be made to the student's method to increase the accuracy of their results.

1. .....

.....

.....

2. .....

.....

.....
[2]

(iii) Suggest the mechanism of action of penicillin.

.....

.....

..... **[1]**

(iv) Suggest how the mechanism of action of polymyxin B differs from that of penicillin.

.....

.....

..... **[1]**

(v) Outline an experiment to distinguish between a bactericidal antibiotic and a bacteriostatic antibiotic.

.....

.....

.....

.....

.....

.....

.....

..... **[3]**

© OCR 2020

6 **(a)** Fig. 6 shows the reactions of one stage of respiration.

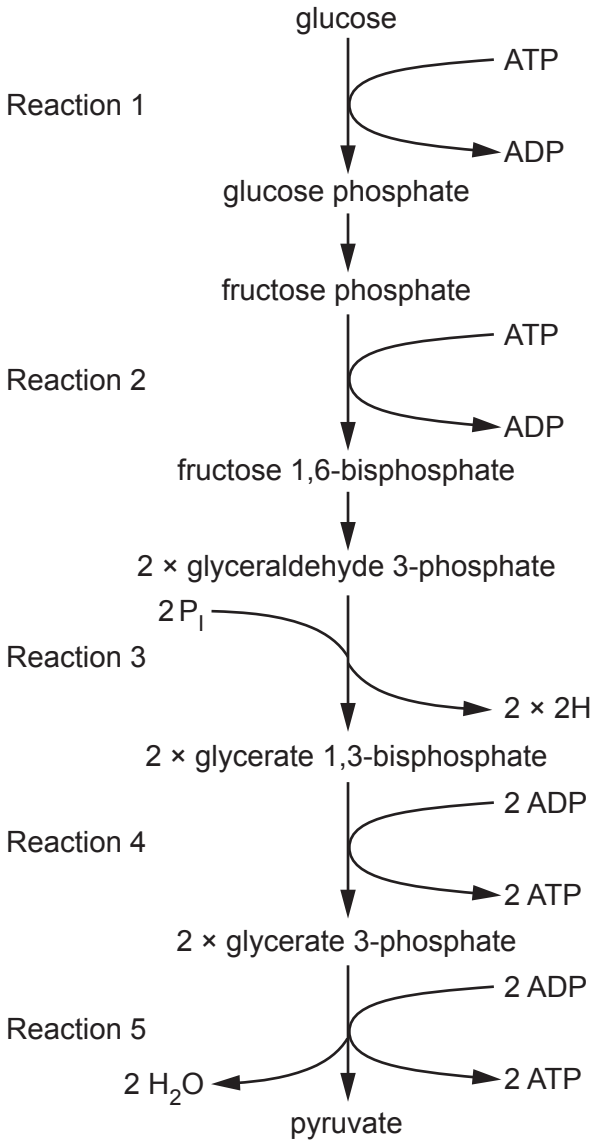

Fig. 6

(i) Name the stage of respiration shown in Fig. 6.

..... **[1]**

(ii) State the location in the cell where the reactions in Fig. 6 occur.

..... **[1]**

© OCR 2020

(iii) Complete the following table by placing a tick (✓) in the appropriate boxes to show which reactions include substrate level phosphorylation, hydrolysis or a dehydrogenase enzyme.

Reaction	Substrate level phosphorylation occurs	Hydrolysis reaction occurs	Dehydrogenase enzyme is used
1			
2			
3			
4			
5			

[3]

(iv) Reactions 1 and 2 in Fig. 6 illustrate how ATP is used to phosphorylate molecules.

Phosphorylation of glucose prevents it from being able to diffuse out of the cell.

Suggest **one** other effect of glucose phosphorylation that is important in the process shown in Fig. 6.

.....

..... **[1]**

(b) Complete the following passage using the correct words or terms.

In the link reaction, coenzyme A accepts two carbons from .....

to form acetyl coenzyme A. At the same time ..... and

..... are formed. This is an example of oxidative

decarboxylation. Acetyl coenzyme A enters the Krebs cycle and reacts with oxaloacetate to

form ..... which is then converted back to oxaloacetate.

[4]

END OF QUESTION PAPER

© OCR 2020

ADDITIONAL ANSWER SPACE

If additional space is required, you should use the following lined page(s). The question number(s) must be clearly shown in the margin(s).

OCR
Oxford Cambridge and RSA

Copyright Information

OCR is committed to seeking permission to reproduce all third-party content that it uses in its assessment materials. OCR has attempted to identify and contact all copyright holders whose work is used in this paper. To avoid the issue of disclosure of answer-related information to candidates, all copyright acknowledgements are reproduced in the OCR Copyright Acknowledgements Booklet. This is produced for each series of examinations and is freely available to download from our public website (www.ocr.org.uk) after the live examination series.

If OCR has unwittingly failed to correctly acknowledge or clear any third-party content in this assessment material, OCR will be happy to correct its mistake at the earliest possible opportunity.

For queries or further information please contact The OCR Copyright Team, The Triangle Building, Shaftesbury Road, Cambridge CB2 8EA.

OCR is part of the Cambridge Assessment Group; Cambridge Assessment is the brand name of University of Cambridge Local Examinations Syndicate (UCLES), which is itself a department of the University of Cambridge.

© OCR 2020