Please check the examination details below before entering your candidate information

Candidate surname	Other names

Pearson Edexcel Level 1/Level 2 GCSE (9–1)

Centre Number | Candidate Number

Time 1 hour 45 minutes

Paper reference **1PH0/2H**

Physics

PAPER 2

Higher Tier

You must have:
Calculator, ruler, protractor

Total Marks

Instructions

- Use **black** ink or ball-point pen.
- **Fill in the boxes** at the top of this page with your name, centre number and candidate number.
- Answer **all** questions.
- Answer the questions in the spaces provided – *there may be more space than you need.*
- Calculators may be used.
- Any diagrams may NOT be accurately drawn, unless otherwise indicated.
- You must **show all your working out** with **your answer clearly identified** at the **end of your solution**.

Information

- The total mark for this paper is 100.
- The marks for **each** question are shown in brackets – *use this as a guide as to how much time to spend on each question.*
- In questions marked with an **asterisk (*)**, marks will be awarded for your ability to structure your answer logically, showing how the points that you make are related or follow on from each other where appropriate.
- A list of equations is included at the end of this exam paper.

Advice

- Read each question carefully before you start to answer it.
- Try to answer every question.
- Check your answers if you have time at the end.
- Good luck with your examination.

Turn over

©2021 Pearson Education Ltd.

Pearson

Answer ALL questions. Write your answers in the spaces provided.

Some questions must be answered with a cross in a box ☒.
If you change your mind about an answer, put a line through the box ☒ and then mark your new answer with a cross ☒.

1 (a) A student gives a plastic strip an overall electric charge.

(i) Describe **one** way that the student can give the plastic strip an overall electric charge.

(1)

.....

.....

(ii) Figure 1 shows a gold leaf electroscope that can be used to investigate static electricity.

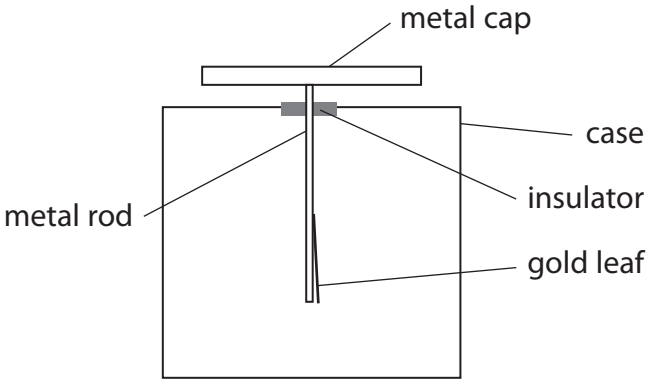

Figure 1

The electroscope has no overall charge.

The gold leaf has a very small mass and can bend very easily.

The student brings a negatively charged plastic strip near to the cap of the electroscope.

The gold leaf bends away from the metal rod.

Which diagram shows the way that electric charge is now distributed?

(1)

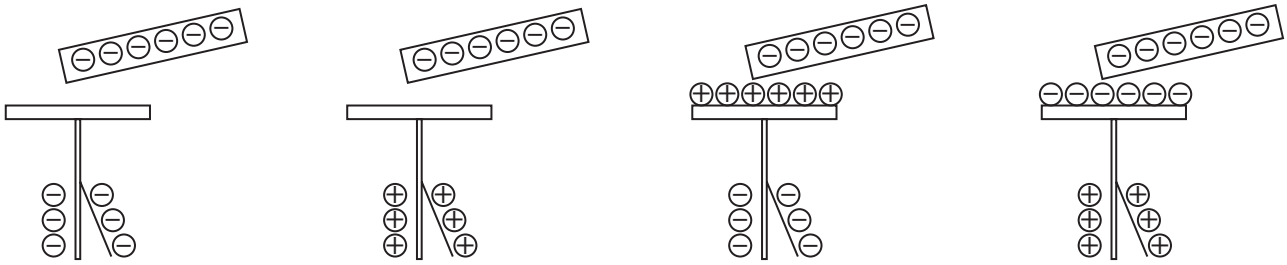

☒ **A** ☒ **B** ☒ **C** ☒ **D**

DO NOT WRITE IN THIS AREA
DO NOT WRITE IN THIS AREA
DO NOT WRITE IN THIS AREA

(b) Figure 2a shows another gold leaf electroscope that has been given an overall negative charge.

A student connects the metal cap of the charged electroscope to earth with a piece of wire as shown in Figure 2b.

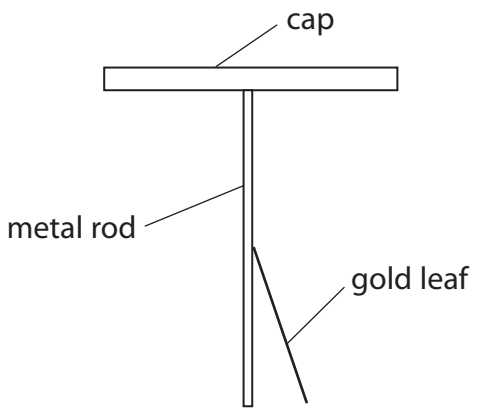

Figure 2a

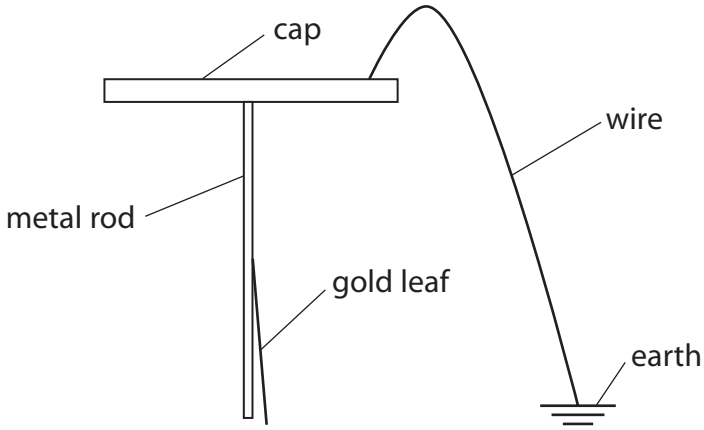

Figure 2b

Explain why the gold leaf has moved.

(2)

.....

.....

.....

.....

DO NOT WRITE IN THIS AREA
DO NOT WRITE IN THIS AREA
DO NOT WRITE IN THIS AREA

(c) Two small objects, P and Q, are each given an electric charge.

Figure 3 represents the electric fields around the objects, P and Q.

Figure 3

(i) Use information from Figure 3 to give **two** differences between the charge on P and the charge on Q.

(2)

1 .....

.....

2 .....

.....

(ii) Object P and object Q are held near to each other so that their electric fields interact with each other.

State the effect that the electric field of object Q has on object P.

(1)

.....

.....

(Total for Question 1 = 7 marks)

DO NOT WRITE IN THIS AREA
DO NOT WRITE IN THIS AREA
DO NOT WRITE IN THIS AREA

DO NOT WRITE IN THIS AREA
DO NOT WRITE IN THIS AREA
DO NOT WRITE IN THIS AREA

BLANK PAGE

2 (a) Figure 4 shows the results from an experiment where the potential difference (voltage) across a filament lamp was varied.

The current and voltage were measured.

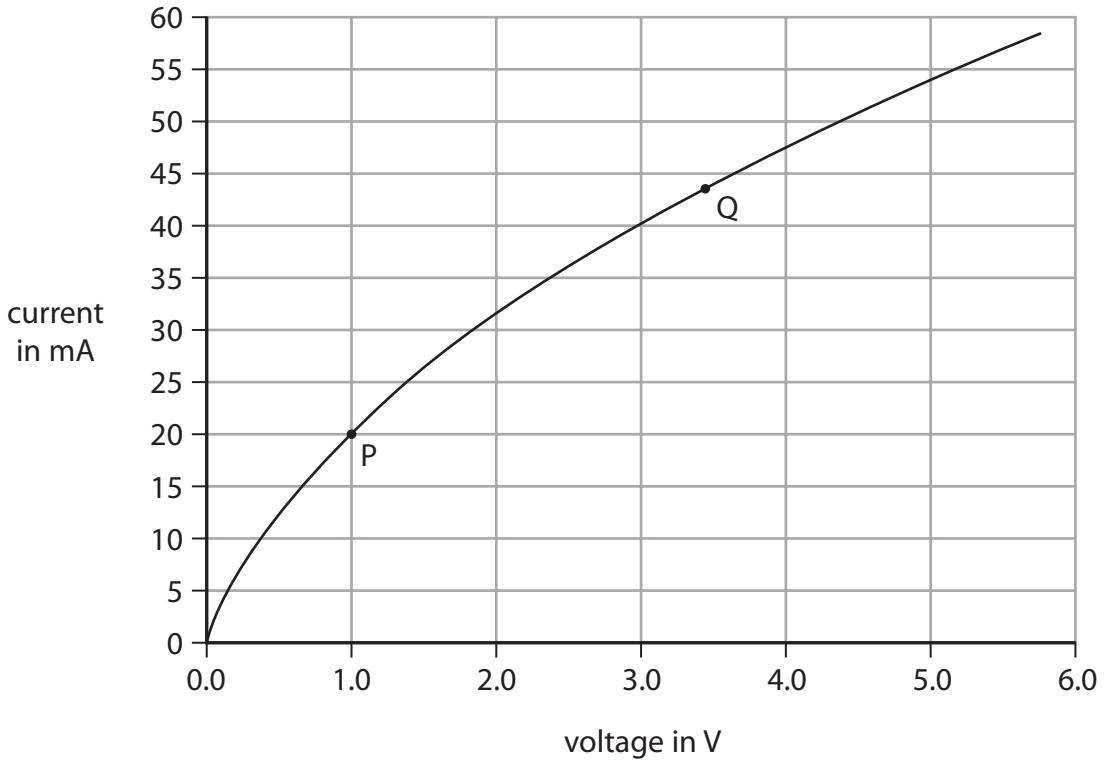

Figure 4

(i) Describe the relationship between the current and the voltage as shown in the graph in Figure 4.

(2)

.....

.....

.....

.....

DO NOT WRITE IN THIS AREA
DO NOT WRITE IN THIS AREA
DO NOT WRITE IN THIS AREA

(ii) Use the values of the voltage and current at point P and at point Q on the graph in Figure 4 to complete the table in Figure 5.

(2)

	voltage in V	**current in mA**
point P		
point Q		

Figure 5

(iii) Calculate the resistance of the filament lamp when the voltage is 4.5 V and the current is 51 mA.

Use the equation

$$R = \frac{V}{I}$$

(2)

resistance = ... Ω

(iv) Explain why the resistance of the filament lamp changes as the voltage across it increases.

(3)

.....

.....

.....

.....

.....

.....

(Total for Question 2 = 9 marks)

DO NOT WRITE IN THIS AREA
DO NOT WRITE IN THIS AREA
DO NOT WRITE IN THIS AREA

3 (a) Describe, in terms of particles, **two** differences between a solid and a liquid of the same substance.

(2)

1 .....

.....

2 .....

.....

(b) Figure 6 shows the dimensions of a solid block of concrete.

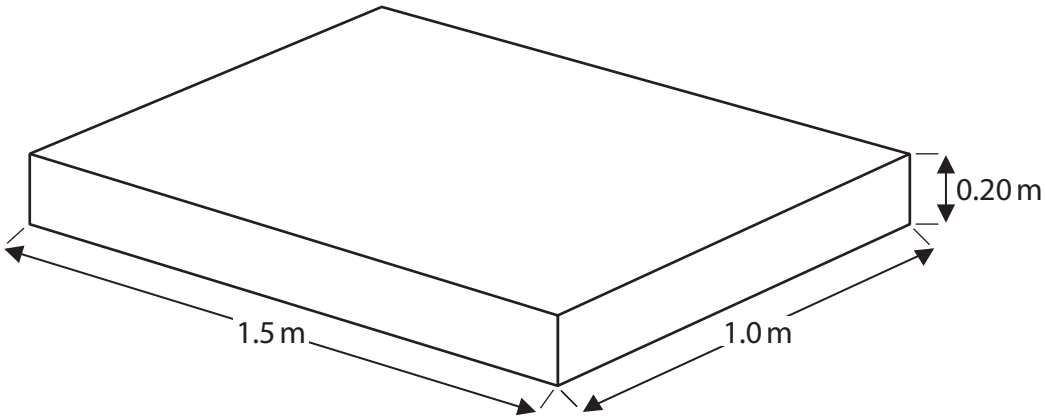

Figure 6

Density of concrete, ρ, = 2100 kg / m^3.

Calculate the mass of the concrete block.

Use the equation

$$m = \rho \times V$$

(3)

mass of concrete block = ... kg

DO NOT WRITE IN THIS AREA
DO NOT WRITE IN THIS AREA
DO NOT WRITE IN THIS AREA

(c) Figure 7 shows a shed made mostly of concrete blocks.

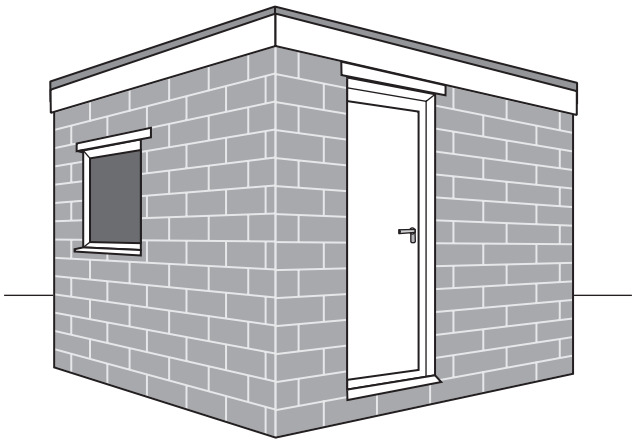

Figure 7

State **two** practical ways to reduce heat loss from this shed.

(2)

1 .....

.....

2 .....

.....

(d) On a very cold day, the temperature of the air is –4 °C.

Calculate the value of this temperature on the kelvin scale.

(1)

temperature = ... K

(Total for Question 3 = 8 marks)

DO NOT WRITE IN THIS AREA
DO NOT WRITE IN THIS AREA
DO NOT WRITE IN THIS AREA

4 (a) Figure 8 shows some water in a tank.

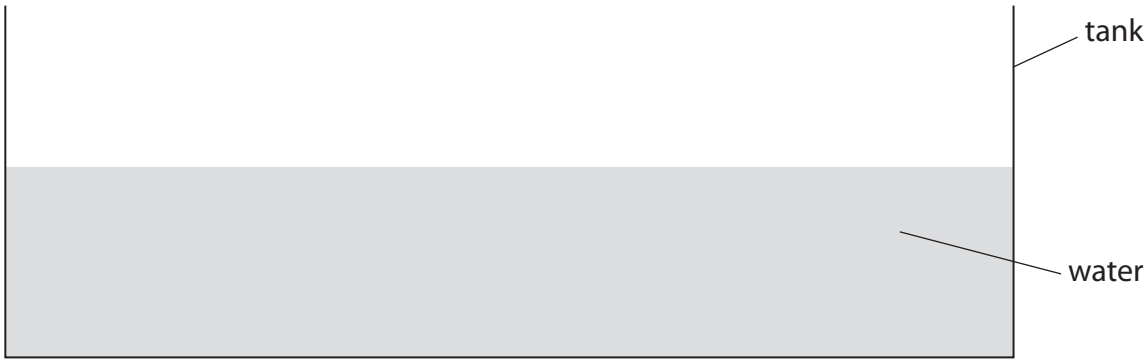

Figure 8

(i) The bottom of the tank has an area of 0.80 m^2.

The force on the bottom of the tank, due to the water, is 2400 N.

Calculate the pressure, due to the water, on the bottom of the tank.

(3)

pressure = ... Pa

(ii) More water is added to the tank.

Explain how the pressure on the bottom of the tank changes when more water is added to the tank.

(2)

.....

.....

.....

.....

DO NOT WRITE IN THIS AREA
DO NOT WRITE IN THIS AREA
DO NOT WRITE IN THIS AREA

(iii) Figure 9 shows an object on the bottom of the tank of water.

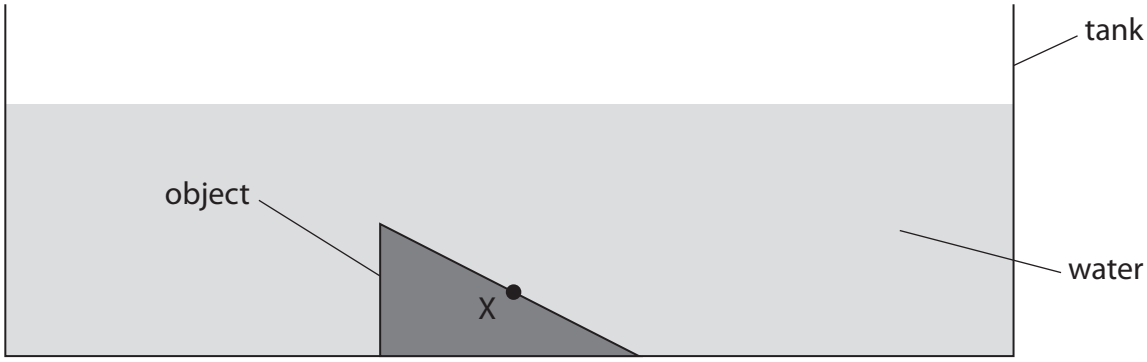

Figure 9

Draw an arrow on Figure 9 to show the direction of the force exerted by the water on the surface of the object at point X.

(1)

DO NOT WRITE IN THIS AREA
DO NOT WRITE IN THIS AREA
DO NOT WRITE IN THIS AREA

(b) Figure 10 is a graph showing how the atmospheric pressure changes with the height above sea level on the Earth's surface.

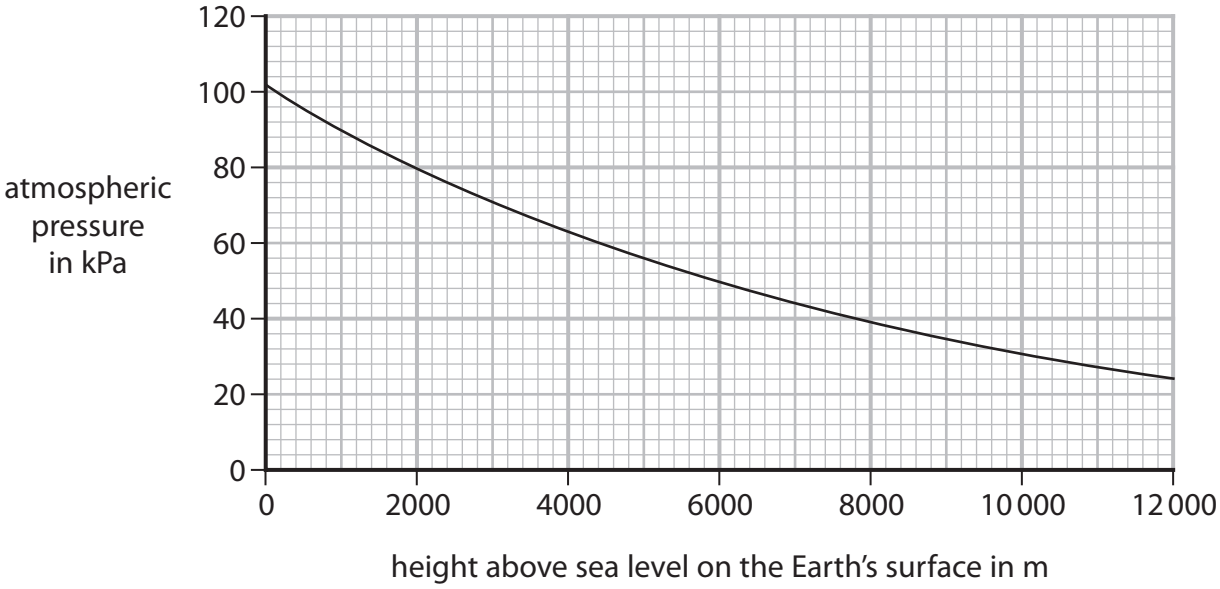

Figure 10

(i) An aeroplane descends from 6000 m to 2000 m.

Use the graph to find the change in atmospheric pressure as the aeroplane descends.

(2)

change in pressure = ... kPa

(ii) Suggest **one** reason why the atmospheric pressure is greater at 2000 m than at 6000 m.

(1)

.....

.....

DO NOT WRITE IN THIS AREA
DO NOT WRITE IN THIS AREA
DO NOT WRITE IN THIS AREA

(c) Figure 11 shows two drawings of the same person on a bed.

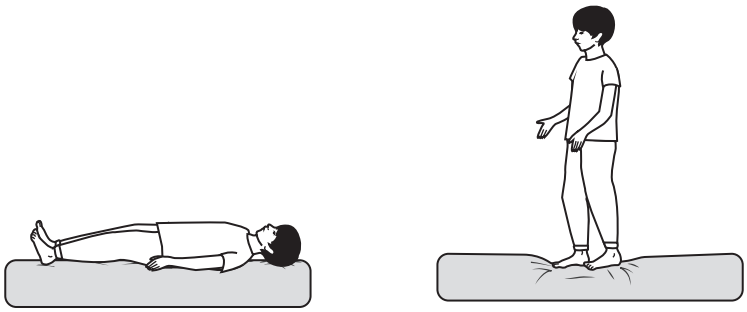

Figure 11

Explain why the person exerts a different pressure on the bed when standing up than when lying down.

(2)

.....

.....

.....

.....

(Total for Question 4 = 11 marks)

DO NOT WRITE IN THIS AREA
DO NOT WRITE IN THIS AREA
DO NOT WRITE IN THIS AREA

5 (a) A student uses plotting compasses to investigate the magnetic field between the poles of two bar magnets.

Figure 12 shows **one** of the plotting compasses and **one** of the bar magnets.

Figure 12

The student places the two magnets on a piece of paper with a pole of one magnet a few centimetres away from a pole of the other magnet.

The student places 20 plotting compasses on the paper near the magnets.

Figure 13 shows the direction in which each of the plotting compasses points.

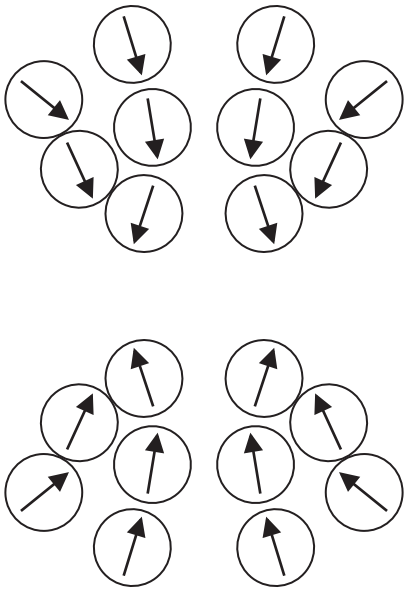

Figure 13

(i) Draw two rectangles on Figure 13 to show the positions of the two bar magnets.

Label the N-pole and the S-pole of each magnet.

(2)

DO NOT WRITE IN THIS AREA
DO NOT WRITE IN THIS AREA
DO NOT WRITE IN THIS AREA

(ii) The student wants to determine the shape of the magnetic field for a larger area around the magnets.

Describe how the student should continue the investigation using just one plotting compass.

(3)

.....

.....

.....

.....

.....

.....

DO NOT WRITE IN THIS AREA
DO NOT WRITE IN THIS AREA
DO NOT WRITE IN THIS AREA

(b) Two long, thin magnets are held with their N-poles facing each other.
The force, F, between the magnets can be calculated using the equation

$$F = \frac{K}{d^2}$$

where
K is a constant value
d is the distance between the magnets.

(i) The magnets are 4.0 cm apart.

The force between the magnets is 1.2 N.

Calculate the value of K.

State the unit.

(3)

K = ... unit .....

(ii) The magnets are held the same distance apart but with the N-pole of one magnet now facing the S-pole of the other magnet.

The value of K does not change.

State how the force would compare with the force in part (i).

(1)

.....

.....

(Total for Question 5 = 9 marks)

DO NOT WRITE IN THIS AREA
DO NOT WRITE IN THIS AREA
DO NOT WRITE IN THIS AREA

DO NOT WRITE IN THIS AREA
DO NOT WRITE IN THIS AREA
DO NOT WRITE IN THIS AREA

6 A student investigates moments of forces.

Figure 14 shows the apparatus used.

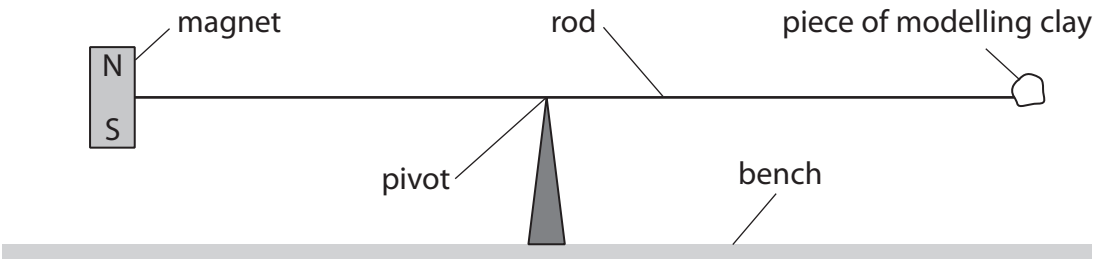

Figure 14

The pivot is under the centre of the rod.

A magnet is fixed to one end of the rod.

A piece of modelling clay is fixed to the other end of the rod.

The system is in equilibrium.

(a) State the relationship between the moment of the weight of the magnet and the moment of the weight of the piece of modelling clay about the pivot.

(1)

.....

.....

(b) The student fixes a coil to the bench under the magnet as shown in Figure 15.

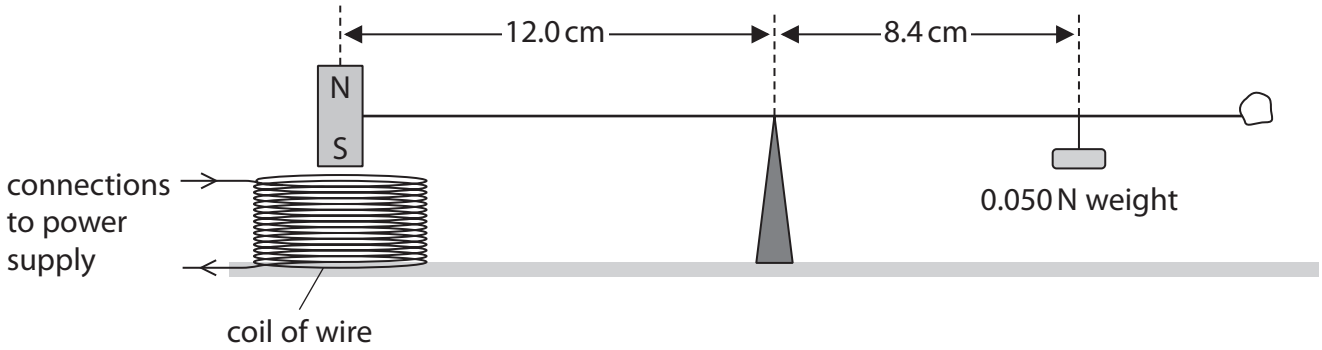

Figure 15

The coil of wire is connected to a d.c. power supply so that there is a current in the coil.

To bring the system back into equilibrium, the student hangs a 0.050 N weight on the rod, 8.4 cm away from the pivot, as shown in Figure 15.

Calculate the size of the force between the magnet and the coil.

(3)

force = ... N

(c) Describe how the student could develop the investigation to determine if the size of the force between the magnet and the coil is directly proportional to the size of the current in the coil.

(4)

.....

.....

.....

.....

.....

.....

.....

.....

DO NOT WRITE IN THIS AREA
DO NOT WRITE IN THIS AREA
DO NOT WRITE IN THIS AREA

(d) The student reverses the direction of the current in the coil.
Describe how the student can bring the system back into equilibrium without making any changes to the magnet.

(2)

.....

.....

.....

.....

(Total for Question 6 = 10 marks)

DO NOT WRITE IN THIS AREA
DO NOT WRITE IN THIS AREA
DO NOT WRITE IN THIS AREA

7 (a) Two cyclists ride on a hilly road and go through points P, Q, R and S.

The diagram in Figure 16 shows how the vertical height of the road changes during the journey from P to S.

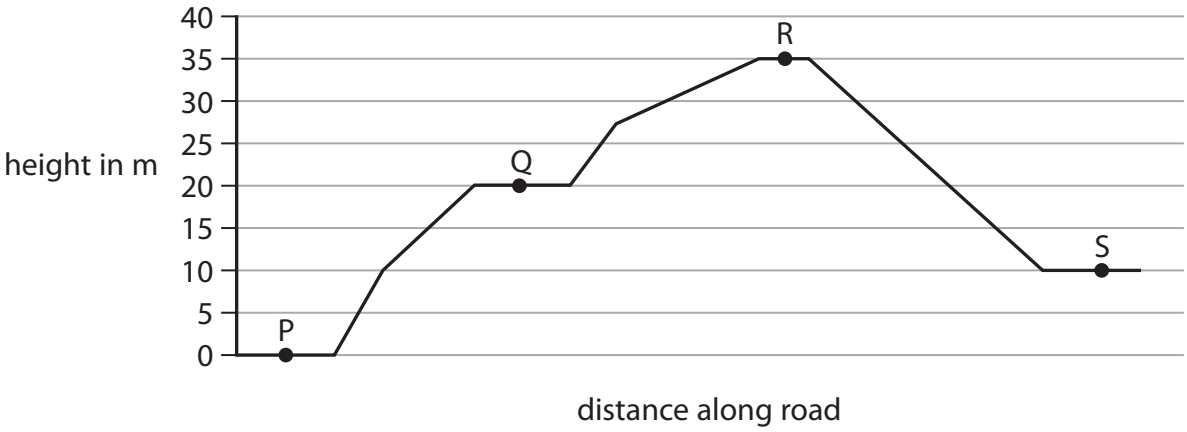

Figure 16

(i) The greatest overall change in gravitational potential energy for each cyclist is between which two points on the journey?

(1)

☒ **A** P and Q

☒ **B** Q and R

☒ **C** P and S

☒ **D** R and S

(ii) The total weight of one cyclist and bicycle is 700 N.

Calculate the total amount of work done against gravity when the cyclist travels from point P to point Q in the journey.

(2)

work done = ... J

DO NOT WRITE IN THIS AREA
DO NOT WRITE IN THIS AREA
DO NOT WRITE IN THIS AREA

(iii) The gravitational potential energy of the other cyclist changes by 11 250 J when travelling from point Q to point R.

Calculate the mass of this cyclist.

Gravitational field strength = 10 N / kg

Use the equation

$$\Delta GPE = m \times g \times \Delta h$$

(2)

mass = ... kg

(iv) Explain why the total amount of work done by a cyclist between points Q and R is different from the change in gravitational potential energy of the cyclist between points Q and R.

(2)

.....

.....

.....

.....

(v) The cyclists lubricated the chains and the wheel bearings of their bicycles before setting off.

Lubricating the chains and wheel bearings helps to

(1)

☒ **A** decrease the amount of work done against gravity

☒ **B** decrease the efficiency of the cyclist and bicycle

☒ **C** increase the efficiency of the cyclist and bicycle

☒ **D** increase the overall amount of energy transferred by the cyclist

DO NOT WRITE IN THIS AREA
DO NOT WRITE IN THIS AREA
DO NOT WRITE IN THIS AREA

(b) The kinetic energy of another cyclist is 2800 J.

The mass of the cyclist is 85 kg.

Calculate the velocity of this cyclist.

Use the equation

$$KE = \frac{1}{2} \times m \times v^2$$

(3)

velocity = ... m / s

(Total for Question 7 = 11 marks)

DO NOT WRITE IN THIS AREA
DO NOT WRITE IN THIS AREA
DO NOT WRITE IN THIS AREA

DO NOT WRITE IN THIS AREA
DO NOT WRITE IN THIS AREA
DO NOT WRITE IN THIS AREA

8 A technician investigates different electrical devices that are used in a car.

The technician connects a device to the 12 V car battery.

The technician measures the current in the circuit and the potential difference (voltage) across the device.

Figure 17 shows the car battery and the device that is being tested.

Figure 17

(a) (i) Draw on Figure 17 to show how the circuit should be completed so that the current in the circuit and voltage across the device can be measured.

(2)

(ii) The technician tests a headlamp.

The current in the headlamp is 4.8 A when connected to the 12 V battery.

Calculate the power supplied to the headlamp.

(2)

power = ... W

(iii) The technician tests an interior light.

The current in the interior light is 600 mA when connected to the 12 V battery.

Calculate the energy transferred to the interior light in 7 minutes.

Use an equation selected from the list of equations at the end of the paper.

(2)

energy transferred = ... J

(b) The technician connects four devices to the car battery.

Each device is connected to its own switch and its own fuse.

Figure 18 shows how the four devices, fuses and switches are connected.

The current in each device is shown next to the device.

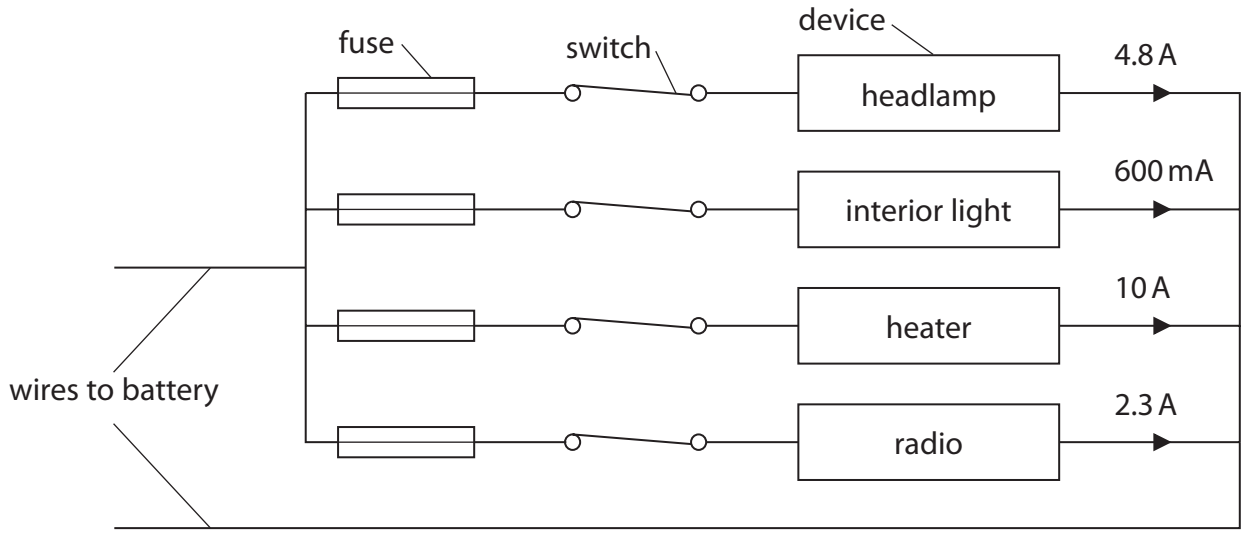

Figure 18

DO NOT WRITE IN THIS AREA
DO NOT WRITE IN THIS AREA
DO NOT WRITE IN THIS AREA

(i) Calculate the current in the wires to the battery when all the devices are switched on.

(1)

current = ... A

(ii) State how the overall resistance of the circuit changes when any one of the devices is switched off.

(1)

.....

.....

(iii) There is a current of 2.3 A in the radio when the radio is working correctly.

Which of these should the technician choose to protect the radio circuit?

(1)

☒ **A** 2 A fuse

☒ **B** 5 A fuse

☒ **C** 10 A fuse

☒ **D** 13 A fuse

(iv) Explain why the wires to the battery in a car are thicker than the wires that connect each device to its switch and its fuse.

(2)

.....

.....

.....

.....

(Total for Question 8 = 11 marks)

DO NOT WRITE IN THIS AREA
DO NOT WRITE IN THIS AREA
DO NOT WRITE IN THIS AREA

9 (a) There is an alternating current of 3 A in the primary coil of a transformer.

There is an alternating current of 6 A in the secondary coil of the transformer.

The transformer is 100% efficient.

(i) The size of the potential difference (voltage) across the secondary coil is

(1)

☒ **A** twice the size of the current in the primary coil

☒ **B** half the size of the current in the primary coil

☒ **C** twice the size of the voltage across the primary coil

☒ **D** half the size of the voltage across the primary coil

(ii) Explain how an alternating current in the primary coil causes an alternating current in the secondary coil of the transformer.

(3)

.....

.....

.....

.....

.....

.....

DO NOT WRITE IN THIS AREA DO NOT WRITE IN THIS AREA DO NOT WRITE IN THIS AREA

(b) The primary coil of a different transformer is connected to the 230 V mains supply.

The voltage across the secondary coil is 15 V.

The primary coil has 600 turns.

Calculate the number of turns on the secondary coil.

Use an equation selected from the list of equations at the end of the paper.

(2)

number of turns = ...

DO NOT WRITE IN THIS AREA
DO NOT WRITE IN THIS AREA
DO NOT WRITE IN THIS AREA

*(c) Figure 19 shows a coil of wire that is being rotated between the poles of a magnet.

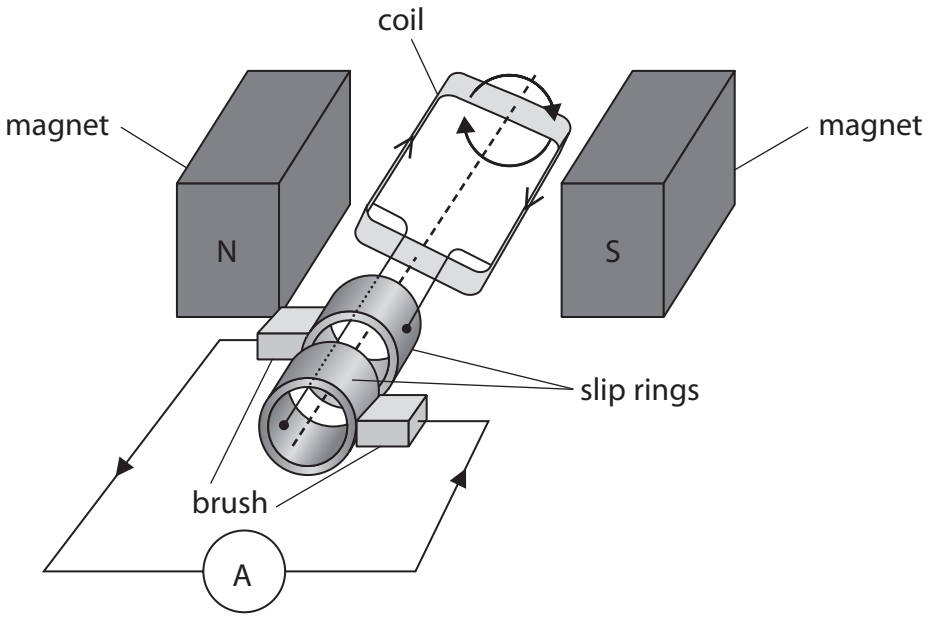

Figure 19

Figure 20 shows how the current in the coil changes during **one** complete rotation of the coil.

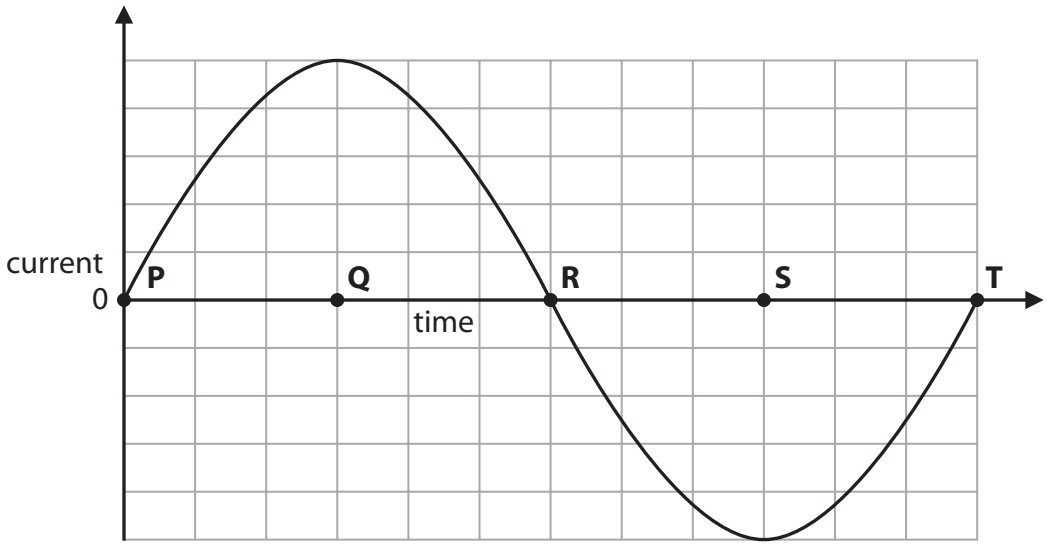

Figure 20

DO NOT WRITE IN THIS AREA
DO NOT WRITE IN THIS AREA
DO NOT WRITE IN THIS AREA

Explain why the current changes in the way shown by the graph in Figure 20.

Your answer should include details of the position of the coil relative to the magnet at each of the times labelled P, Q, R, S and T.

You may use diagrams to help your answer.

(6)

.....

.....

.....

.....

.....

.....

.....

.....

.....

.....

.....

.....

.....

.....

.....

.....

(Total for Question 9 = 12 marks)

DO NOT WRITE IN THIS AREA
DO NOT WRITE IN THIS AREA
DO NOT WRITE IN THIS AREA

BLANK PAGE

DO NOT WRITE IN THIS AREA
DO NOT WRITE IN THIS AREA
DO NOT WRITE IN THIS AREA

DO NOT WRITE IN THIS AREA
DO NOT WRITE IN THIS AREA
DO NOT WRITE IN THIS AREA

10 (a) An electric kettle contains 1.41 kg of water at 25 °C.

The kettle is switched on.

After a while, the water reaches boiling point at 100 °C.

The specific heat capacity of water is 4200 J / kg °C.

(i) Calculate the amount of thermal energy supplied to the water by the kettle.
Give your answer to the appropriate number of significant figures.

Use an equation selected from the list of equations at the end of the paper.

(3)

energy supplied = ... J

(ii) The kettle is kept switched on and the water continues to boil.

After a while, the mass of the water in the kettle has decreased to 1.21 kg.

The thermal energy supplied to the water during this time was 450 000 J.

Calculate the specific latent heat of vaporisation of water.

Use an equation selected from the list of equations at the end of the paper.

(3)

specific latent heat of vaporisation = ... J / kg

*(b) This question is about determining the specific heat capacity of aluminium.
An aluminium block is placed in boiling water as shown in Figure 21.

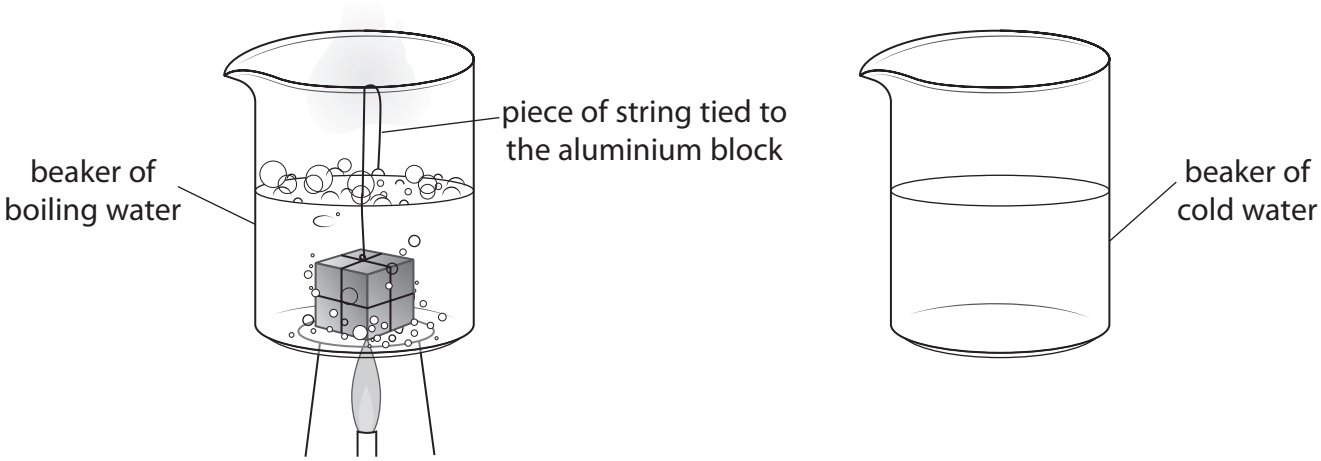

Figure 21

The piece of string is tied to the aluminium block so the block can be transferred from the boiling water to the cold water.

DO NOT WRITE IN THIS AREA
DO NOT WRITE IN THIS AREA
DO NOT WRITE IN THIS AREA

Describe how a student could use this apparatus, and any additional items needed, to determine the specific heat capacity of aluminium.

Your answer should include how the student would

- obtain the necessary measurements
- use the measurements to calculate the specific heat capacity of aluminium.

(6)

.....

.....

.....

.....

.....

.....

.....

.....

.....

.....

.....

.....

.....

.....

.....

.....

.....

(Total for Question 10 = 12 marks)

TOTAL FOR PAPER = 100 MARKS

DO NOT WRITE IN THIS AREA
DO NOT WRITE IN THIS AREA
DO NOT WRITE IN THIS AREA

BLANK PAGE

DO NOT WRITE IN THIS AREA
DO NOT WRITE IN THIS AREA
DO NOT WRITE IN THIS AREA

DO NOT WRITE IN THIS AREA
DO NOT WRITE IN THIS AREA
DO NOT WRITE IN THIS AREA

BLANK PAGE

Equations

(final velocity)^2 – (initial velocity)^2 = 2 × acceleration × distance $v^2 - u^2 = 2 \times a \times x$
force = change in momentum ÷ time $F = \frac{(mv - mu)}{t}$
energy transferred = current × potential difference × time $E = I \times V \times t$
force on a conductor at right angles to a magnetic field carrying a current = magnetic flux density × current × length $F = B \times I \times l$
$\frac{\text{voltage across primary coil}}{\text{voltage across secondary coil}} = \frac{\text{number of turns in primary coil}}{\text{number of turns in secondary coil}}$ $\frac{V_p}{V_s} = \frac{N_p}{N_s}$
potential difference across primary coil × current in primary coil = potential difference across secondary coil × current in secondary coil $V_p \times I_p = V_s \times I_s$
change in thermal energy = mass × specific heat capacity × change in temperature $\Delta Q = m \times c \times \Delta\theta$
thermal energy for a change of state = mass × specific latent heat $Q = m \times L$
to calculate pressure or volume for gases of fixed mass at constant temperature $P_1 V_1 = P_2 V_2$
energy transferred in stretching = 0.5 × spring constant × (extension)^2 $E = ½ \times k \times x^2$
pressure due to a column of liquid = height of column × density of liquid × gravitational field strength $P = h \times \rho \times g$

DO NOT WRITE IN THIS AREA
DO NOT WRITE IN THIS AREA
DO NOT WRITE IN THIS AREA