Please check the examination details below before entering your candidate information

Candidate surname	Other names

Pearson Edexcel Level 1/Level 2 GCSE (9–1)

Centre Number | Candidate Number

Time 1 hour 45 minutes

Paper reference **1PH0/2F**

Physics

PAPER 2

Foundation Tier

You must have:
Calculator, ruler

Total Marks

Instructions

- Use **black** ink or ball-point pen.
- **Fill in the boxes** at the top of this page with your name, centre number and candidate number.
- Answer **all** questions.
- Answer the questions in the spaces provided – *there may be more space than you need.*
- Calculators may be used.
- Any diagrams may NOT be accurately drawn, unless otherwise indicated.
- You must **show all your working out** with **your answer clearly identified** at the **end of your solution**.

Information

- The total mark for this paper is 100.
- The marks for **each** question are shown in brackets – *use this as a guide as to how much time to spend on each question.*
- In questions marked with an **asterisk (*)**, marks will be awarded for your ability to structure your answer logically, showing how the points that you make are related or follow on from each other where appropriate.
- A list of equations is included at the end of this exam paper.

Advice

- Read each question carefully before you start to answer it.
- Try to answer every question.
- Check your answers if you have time at the end.
- Good luck with your examination.

Turn over

©2021 Pearson Education Ltd.
1/1/1/1/1/

P 6 7 0 7 3 A 0 1 3 6

Pearson

Answer ALL questions. Write your answers in the spaces provided.

Some questions must be answered with a cross in a box ☒.
If you change your mind about an answer, put a line through the box ☒ and then mark your new answer with a cross ☒.

1 Figure 1 shows an electrical circuit.

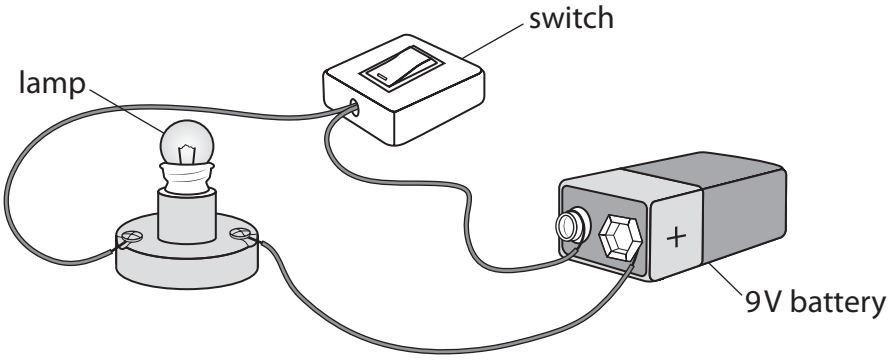

Figure 1

(a) Draw a circuit diagram of the electrical circuit in Figure 1 in the space below.

(4)

DO NOT WRITE IN THIS AREA
DO NOT WRITE IN THIS AREA
DO NOT WRITE IN THIS AREA

(b) When the current in a lamp is 0.15 A, the resistance of the lamp is 40 Ω.

Calculate the voltage across the lamp.

Use the equation

$$V = I \times R$$

(2)

voltage = ... V

(c) Figure 2 shows an ammeter that can read up to 5 A.

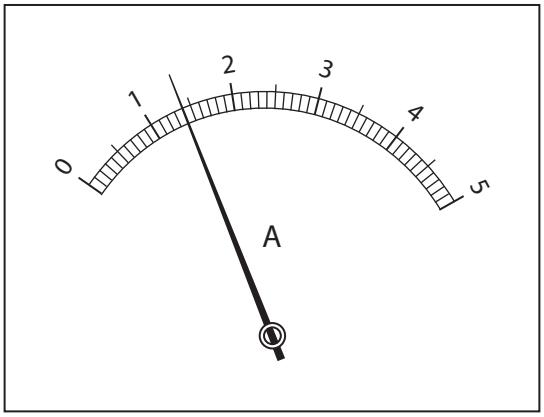

Figure 2

State the value of the current shown on the ammeter in Figure 2.

(1)

current = ... A

(Total for Question 1 = 7 marks)

DO NOT WRITE IN THIS AREA
DO NOT WRITE IN THIS AREA
DO NOT WRITE IN THIS AREA

2 (a) Complete the following sentences using words from the box below.

electrostatic	friction	gravitational	magnetic

(i) The force that keeps the Earth in orbit around the sun is

..... attraction.

(1)

(ii) The force that opposes motion between two surfaces is ..... .

(1)

(iii) The force that can move small pieces of paper towards a plastic comb

is ..... attraction.

(1)

(b) Which of these statements is true for a vector quantity?

(1)

☒ **A** It has size only

☒ **B** It has direction only

☒ **C** It has direction and size

☒ **D** It does not have direction or size

(c) Figure 3 shows a force of 200 N acting at the end of a plank of wood.

The force acts at right angles to the plank and at 3.0 m away from a pivot.

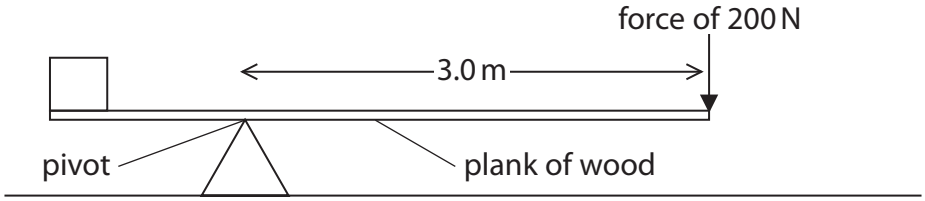

Figure 3

Calculate the moment of the 200 N force about the pivot.

State the unit of the moment of the force.

Use the equation

moment of a force = force × distance at right angles to the direction of the force

(3)

moment of the force about the pivot = ... unit .....

(Total for Question 2 = 7 marks)

DO NOT WRITE IN THIS AREA
DO NOT WRITE IN THIS AREA
DO NOT WRITE IN THIS AREA

DO NOT WRITE IN THIS AREA
DO NOT WRITE IN THIS AREA
DO NOT WRITE IN THIS AREA

3 (a) When the pressure in a container of gas increases, the particles of the gas

(1)

☒ **A** hit the sides of the container less often

☒ **B** hit the sides of the container more often

☒ **C** move with lower speeds

☒ **D** vibrate more energetically about fixed positions

(b) A student investigates the pressure and volume of some trapped gas.
Figure 4 shows the apparatus used.

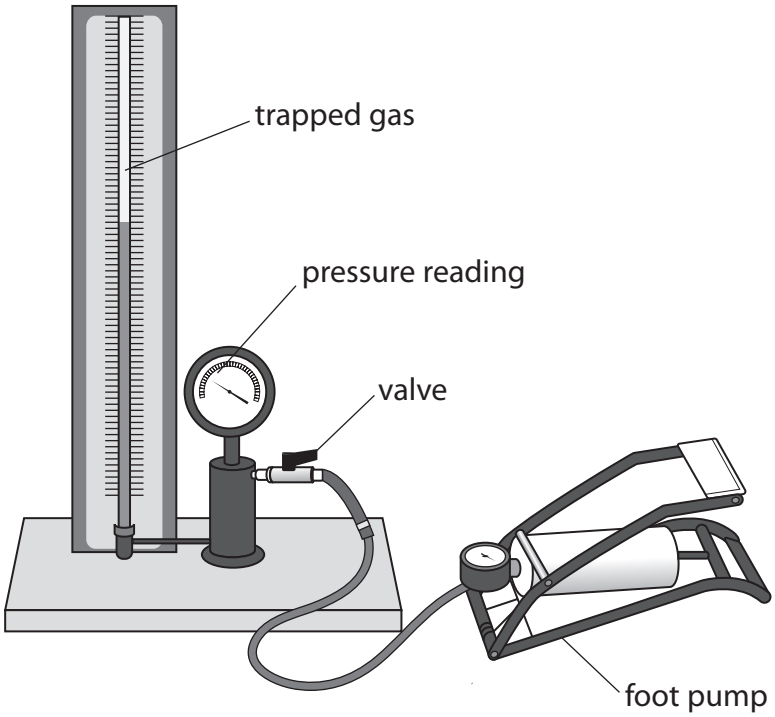

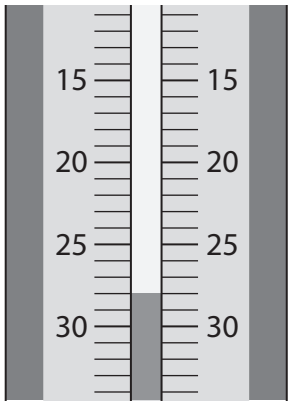

enlarged view of volume scale

Figure 4

Figure 5 shows the student's table of results.

p	***V***	***p* × *V***
100	28.0	2800
123	23.0	2829
140	20.0	2800
160	18.0	2880
180	16.5	2970

Figure 5

(i) Suggest what the student should add to the headings of the table in Figure 5.

(1)

.....

.....

DO NOT WRITE IN THIS AREA
DO NOT WRITE IN THIS AREA
DO NOT WRITE IN THIS AREA

(ii) Use Figure 5 to estimate the volume of gas for a pressure reading of '170'.

(2)

volume of gas = ...

(iii) Suggest **two** ways the student could improve the investigation.

(2)

1 .....

.....

2 .....

.....

(iv) Explain whether the values, in the column headed '***p* × *V***' in Figure 5, fit the equation

$$p_1 \times V_1 = p_2 \times V_2$$

(3)

.....

.....

.....

.....

.....

.....

(Total for Question 3 = 9 marks)

DO NOT WRITE IN THIS AREA
DO NOT WRITE IN THIS AREA
DO NOT WRITE IN THIS AREA

4 (a) Figure 6 shows some objects and words describing these objects.

Draw one line from each object to its description.

(2)

object	**description**
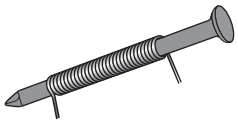 nail in a current-carrying coil	non-magnetic
plotting compass needle	permanent magnet
wooden ruler	temporary magnet

Figure 6

DO NOT WRITE IN THIS AREA
DO NOT WRITE IN THIS AREA
DO NOT WRITE IN THIS AREA

(b) Figure 7 shows a wire passing through a piece of card.
The wire carries an electric current.

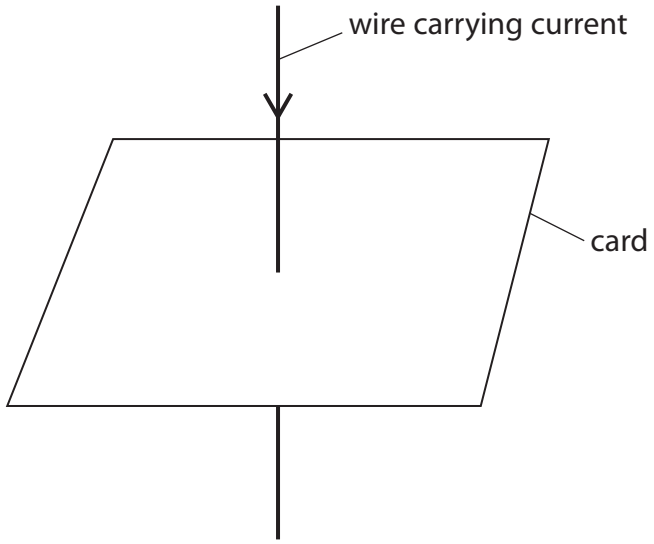

Figure 7

(i) Draw **one** magnetic field line on Figure 7, to show the shape of the magnetic field produced by the current.

(1)

(ii) Draw **one** arrow on the field line you have drawn to show the direction of the magnetic field.

(1)

DO NOT WRITE IN THIS AREA
DO NOT WRITE IN THIS AREA
DO NOT WRITE IN THIS AREA

(c) A student measures the strength of the magnetic field at several distances from the wire in Figure 7.
Figure 8 shows most of the student's results.

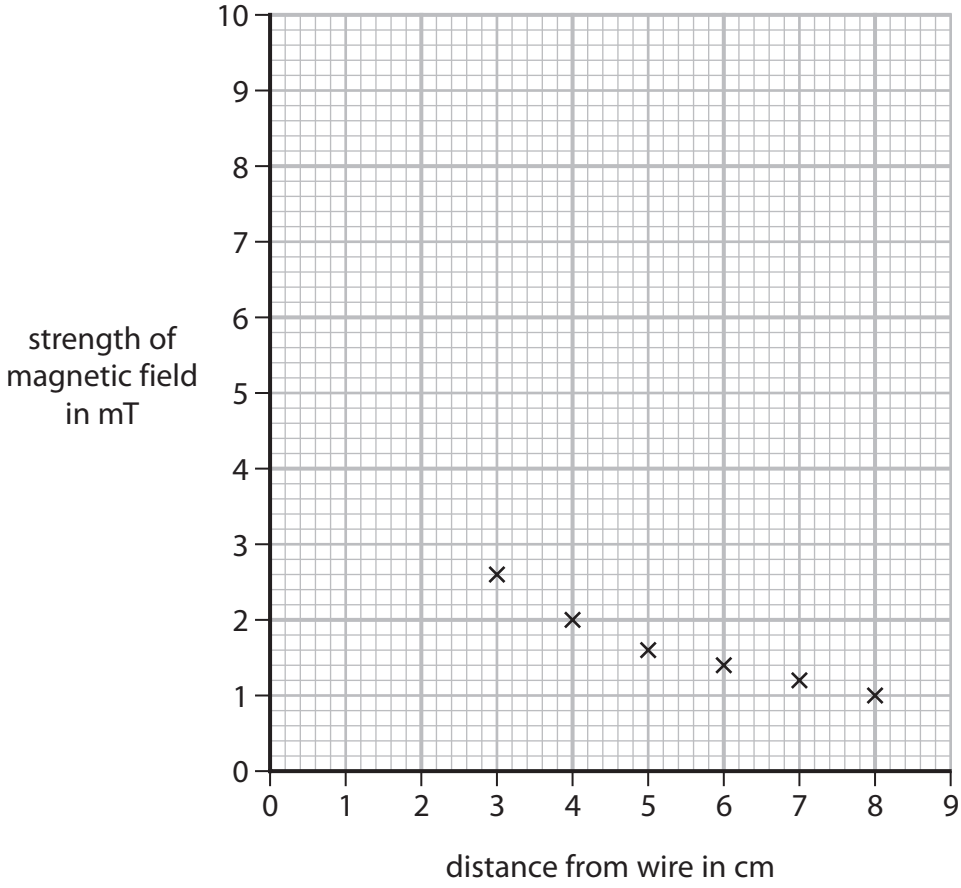

Figure 8

Figure 9 shows two extra sets of results.
mT is a unit of strength of a magnetic field.

distance from wire in cm	strength of magnetic field in mT
1.0	8.1
2.0	3.9

Figure 9

(i) Plot the two extra points on Figure 8.

(2)

(ii) Draw a best fit curve on the graph in Figure 8.

(1)

DO NOT WRITE IN THIS AREA
DO NOT WRITE IN THIS AREA
DO NOT WRITE IN THIS AREA

(iii) Use the graph in Figure 8 to calculate the change in strength of magnetic field when the distance from the wire changes from 4 cm to 8 cm.

(2)

change in strength of magnetic field = ... mT

(iv) The distance from the wire affects the strength of the magnetic field.

State **one** other factor that affects the strength of the magnetic field.

(1)

.....

(Total for Question 4 = 10 marks)

DO NOT WRITE IN THIS AREA
DO NOT WRITE IN THIS AREA
DO NOT WRITE IN THIS AREA

5 This question is about using the mains electricity supply.

(a) (i) An electric kettle is used to boil some water.
The mains supply voltage is 230 V.
The power supplied to the kettle is 1.9 kW.

Calculate the current in the kettle.
Use the equation

$$I = \frac{P}{V}$$

(2)

current supplied to the kettle = ... A

(ii) A coffee machine takes 120 s to heat some water.

Mains supply voltage = 230 V
Current in this coffee machine = 7.4 A

Calculate the energy transferred to the coffee machine in 120 s.

Use an equation selected from the list of equations at the end of the paper.

(2)

energy transferred to coffee machine = ... J

DO NOT WRITE IN THIS AREA
DO NOT WRITE IN THIS AREA
DO NOT WRITE IN THIS AREA

(b) Figure 10 shows the inside of a mains plug.
The neutral wire is labelled.

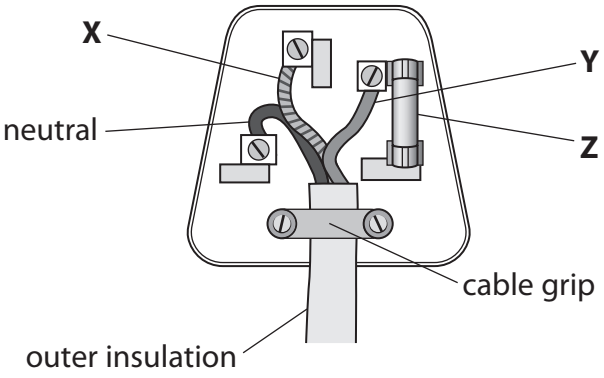

Figure 10

(i) State the name of wire **X** and the name of wire **Y**.

(2)

wire **X** .....

wire **Y** .....

(ii) State the name of component **Z**.

(1)

component **Z** .....

(c) A transformer is used to connect a laptop computer to the mains electricity supply.
The input voltage to the transformer is 230 V.
The output current from the transformer is 2.37 A.
The transformer has an output voltage of 19.0 V.
The transformer used is 100% efficient.

Calculate the input current to the transformer.

Use the equation

input current × input voltage = output current × output voltage

(3)

input current = ... A

(Total for Question 5 = 10 marks)

DO NOT WRITE IN THIS AREA
DO NOT WRITE IN THIS AREA
DO NOT WRITE IN THIS AREA

6 This question is about energy changes.

(a) Figure 11 shows a water slide.
A person travels from the top to the bottom of the water slide.

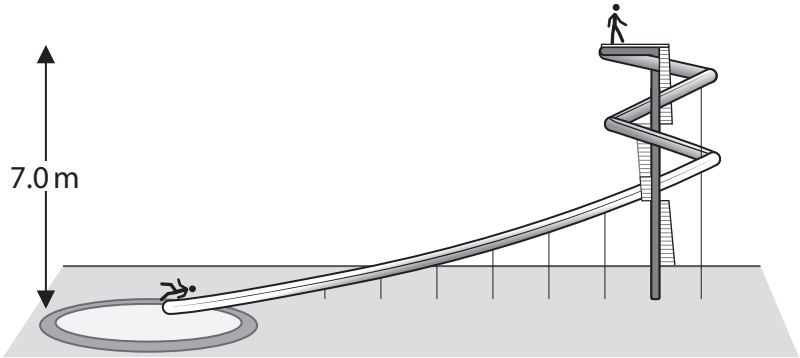

Figure 11

(i) The mass of the person, $m = 72$ kg.
The change in vertical height, $h = 7.0$ m
Gravitational field strength, $g = 10$ N / kg

Calculate the change in gravitational potential energy for the person.

Use the equation

$$\text{change in gravitational potential energy} = m \times g \times h$$

(2)

change in gravitational potential energy = ... J

DO NOT WRITE IN THIS AREA
DO NOT WRITE IN THIS AREA
DO NOT WRITE IN THIS AREA

(ii) The person comes to rest after the end of the water slide.

Explain what happens to the energy as the person comes to rest after the end of the water slide.

(2)

.....

.....

(b) Figure 12 shows a person pushing a box from the bottom of a slope to the top of the slope.

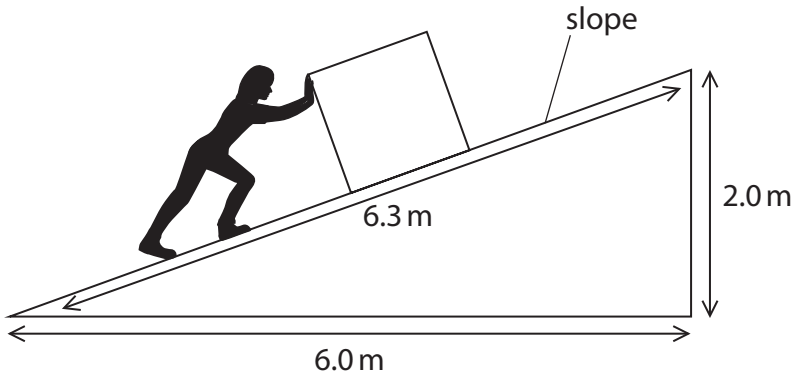

Figure 12

Explain which one of the three distances shown in Figure 12 should be used to calculate the work done against the force of friction between the box and the slope.

(2)

.....

.....

.....

.....

DO NOT WRITE IN THIS AREA
DO NOT WRITE IN THIS AREA
DO NOT WRITE IN THIS AREA

(c) Calculate the kinetic energy of a tennis ball travelling at 28 m/s.
The mass of the tennis ball = 58 g.

Use the equation

$$KE = \frac{1}{2} \times m \times v^2$$

(3)

kinetic energy = ... J

(Total for Question 6 = 9 marks)

DO NOT WRITE IN THIS AREA
DO NOT WRITE IN THIS AREA
DO NOT WRITE IN THIS AREA

7 (a) Figure 13 shows a negatively charged metal sphere, M.

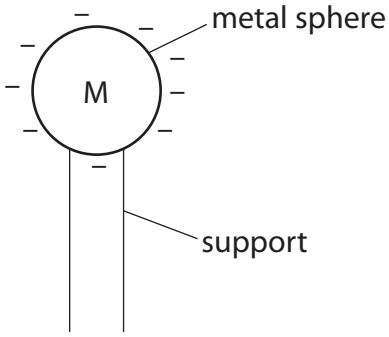

Figure 13

(i) Sphere M is negatively charged because it has

(1)

☒ **A** gained electrons

☒ **B** lost electrons

☒ **C** gained protons

☒ **D** lost protons

DO NOT WRITE IN THIS AREA
DO NOT WRITE IN THIS AREA
DO NOT WRITE IN THIS AREA

(ii) A metal sphere, N, is connected to earth by a wire.

N is moved near to M as shown in Figure 14.

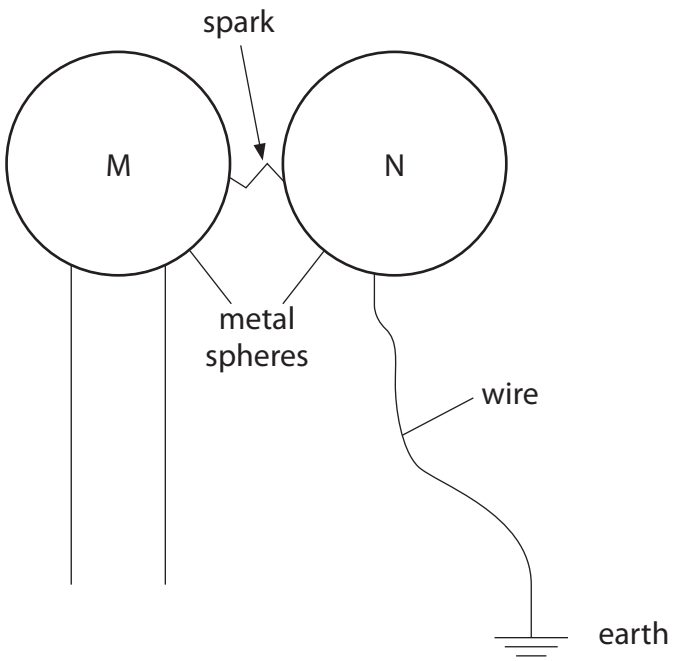

Figure 14

A spark jumps between the spheres, discharging sphere M.

Describe what happens in the wire connecting sphere N to earth when the spark jumps between M and N.

(2)

.....

.....

.....

.....

DO NOT WRITE IN THIS AREA
DO NOT WRITE IN THIS AREA
DO NOT WRITE IN THIS AREA

(iii) Describe a use of earthing in everyday life.

Your answer should state the use and describe why earthing is needed.

(2)

.....

.....

.....

.....

(b) Figure 15 shows two parallel metal plates.

The plates are charged using a very high voltage.

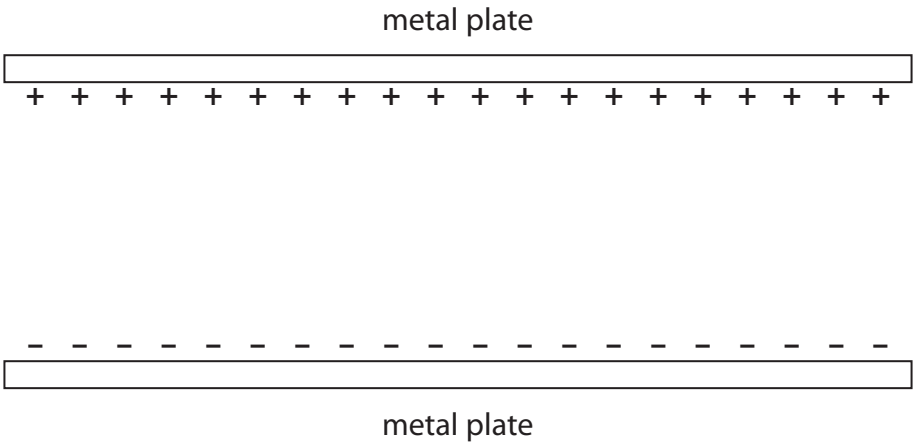

Figure 15

Draw on Figure 15 the shape and direction of the electric field **between** the plates.

(2)

DO NOT WRITE IN THIS AREA
DO NOT WRITE IN THIS AREA
DO NOT WRITE IN THIS AREA

*(c) This question is about electrostatic charges and the forces between them.

Figure 16 shows some apparatus that can be used to show that like charges repel and unlike charges attract.

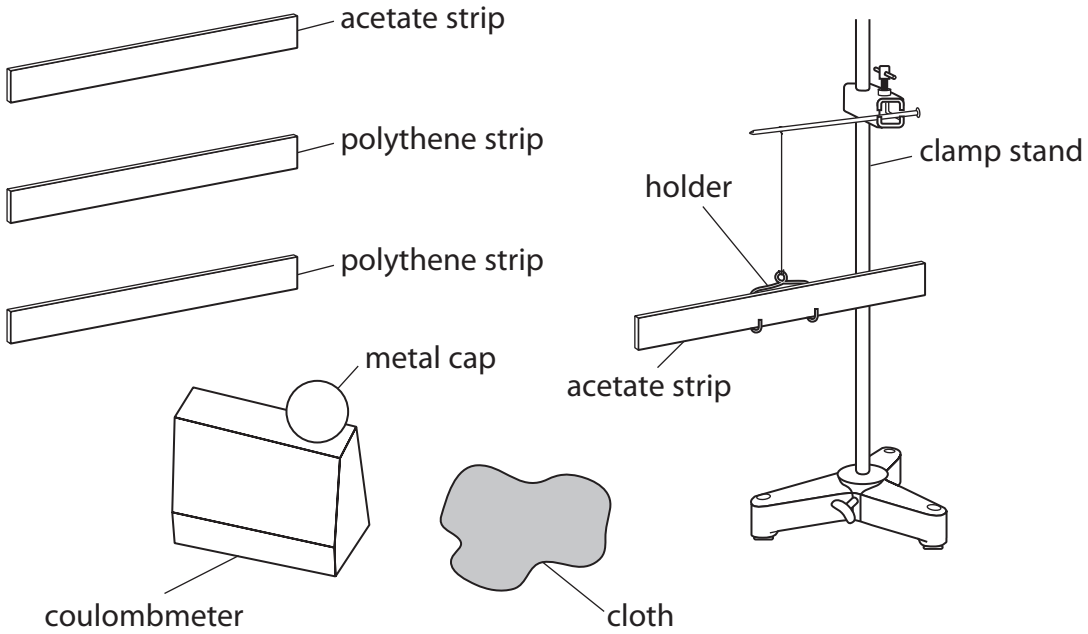

Figure 16

An acetate strip can be charged positively.

A polythene strip can be charged negatively.

A coulombmeter can be used to measure charge and whether the charge is positive or negative.

DO NOT WRITE IN THIS AREA
DO NOT WRITE IN THIS AREA
DO NOT WRITE IN THIS AREA

Explain how you would use the apparatus in Figure 16 to show that like charges repel and unlike charges attract.

(6)

.....

.....

.....

.....

.....

.....

.....

.....

.....

.....

.....

.....

(Total for Question 7 = 13 marks)

DO NOT WRITE IN THIS AREA
DO NOT WRITE IN THIS AREA
DO NOT WRITE IN THIS AREA

BLANK PAGE

DO NOT WRITE IN THIS AREA
DO NOT WRITE IN THIS AREA
DO NOT WRITE IN THIS AREA

8 (a) Figure 17 shows two different types of the same circuit component.

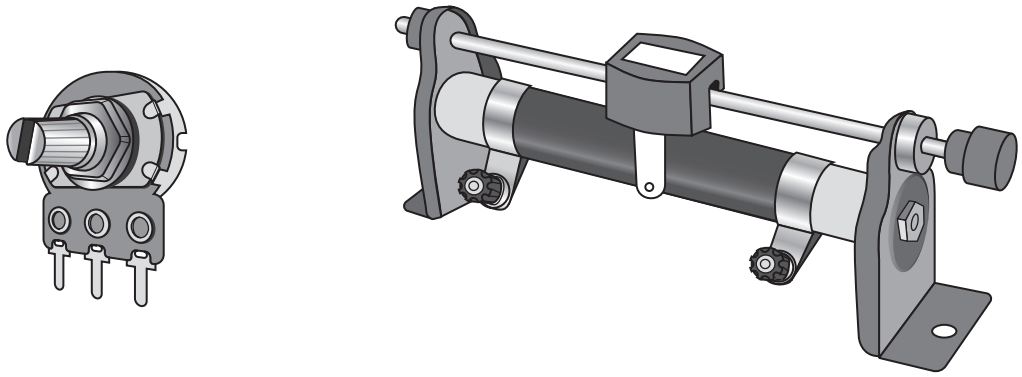

Figure 17

What is the name of this circuit component?

(1)

☒ **A** diode

☒ **B** light dependent resistor

☒ **C** thermistor

☒ **D** variable resistor

(b) Which row in the table describes the way that ammeters and voltmeters should be connected with a component in a circuit?

(1)

	ammeter	voltmeter
☒ **A**	in parallel	in parallel
☒ **B**	in parallel	in series
☒ **C**	in series	in parallel
☒ **D**	in series	in series

DO NOT WRITE IN THIS AREA
DO NOT WRITE IN THIS AREA
DO NOT WRITE IN THIS AREA

(c) Figure 18 shows the results from an experiment where the potential difference (voltage) across a filament lamp was varied.

The current and voltage were measured.

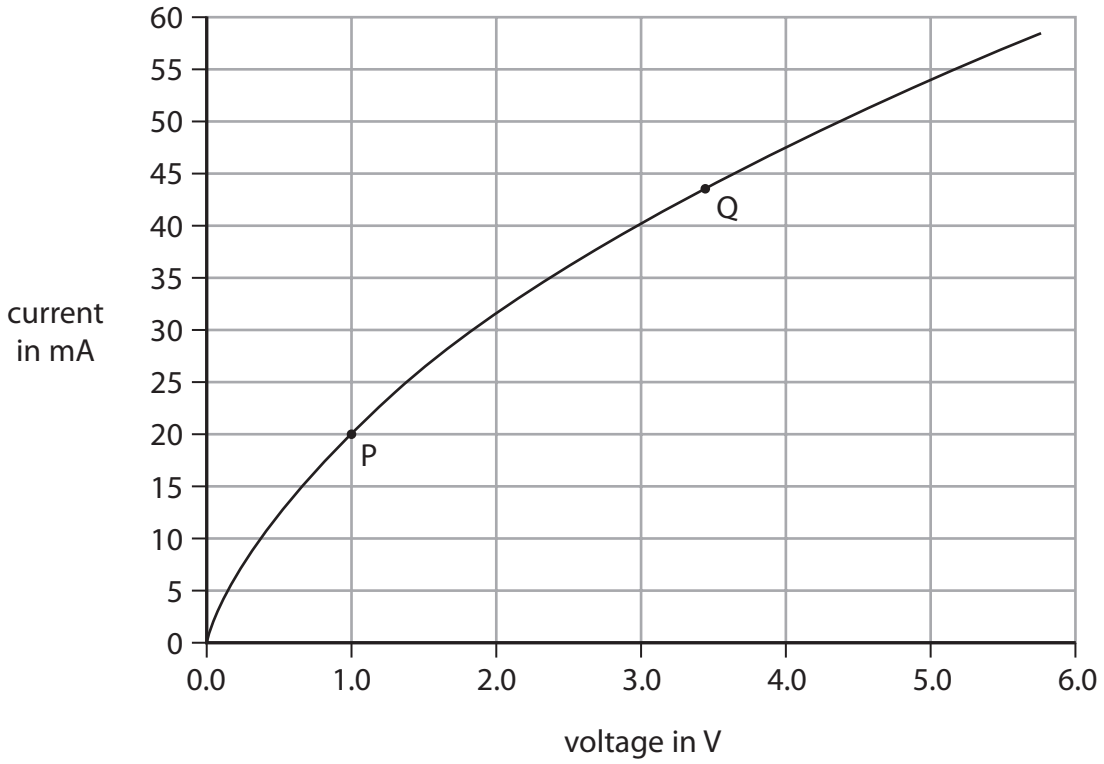

Figure 18

(i) Describe the relationship between the current and the voltage as shown in the graph in Figure 18.

(2)

.....

.....

.....

.....

DO NOT WRITE IN THIS AREA
DO NOT WRITE IN THIS AREA
DO NOT WRITE IN THIS AREA

(ii) Use the values of the voltage and current at point P and at point Q on the graph in Figure 18 to complete the table in Figure 19.

(2)

	voltage in V	**current in mA**
point P		
point Q		

Figure 19

(iii) Calculate the resistance of the filament lamp when the voltage is 4.5 V and the current is 51 mA.

Use the equation

$$R = \frac{V}{I}$$

(2)

resistance = ... Ω

(iv) Explain why the resistance of the filament lamp changes as the voltage across it increases.

(3)

.....

.....

.....

.....

.....

.....

(Total for Question 8 = 11 marks)

DO NOT WRITE IN THIS AREA
DO NOT WRITE IN THIS AREA
DO NOT WRITE IN THIS AREA

9 (a) Describe, in terms of particles, **two** differences between a solid and a liquid of the same substance.

(2)

1 .....

.....

2 .....

.....

(b) Figure 20 shows the dimensions of a solid block of concrete.

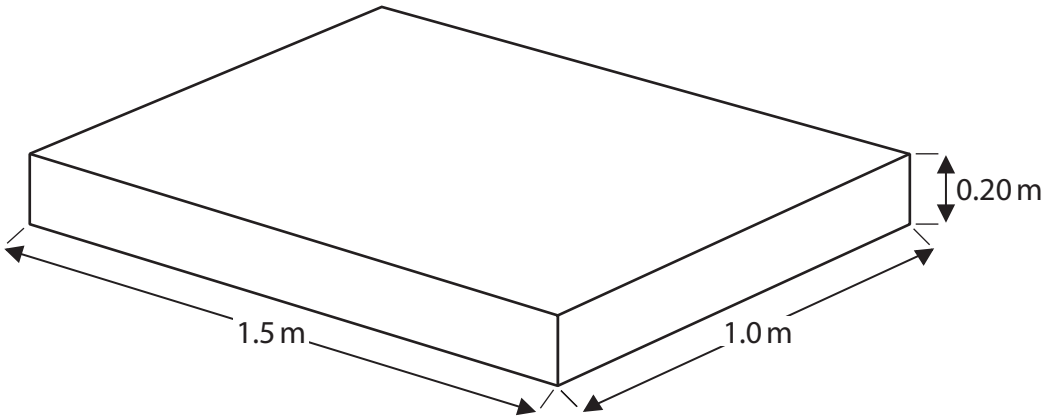

Figure 20

Density of concrete, ρ, = 2100 kg / m^3.

Calculate the mass of the concrete block.

Use the equation:

$$m = \rho \times V$$

(3)

mass of concrete block = ... kg

DO NOT WRITE IN THIS AREA
DO NOT WRITE IN THIS AREA
DO NOT WRITE IN THIS AREA

(c) Figure 21 shows a shed made mostly of concrete blocks.

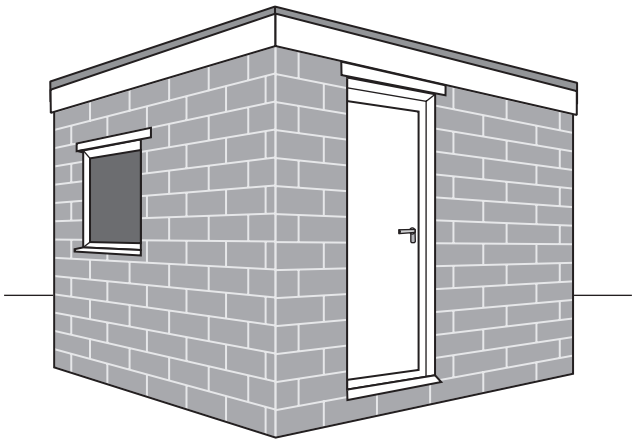

Figure 21

State **two** practical ways to reduce heat loss from this shed.

(2)

1 .....

.....

2 .....

.....

DO NOT WRITE IN THIS AREA
DO NOT WRITE IN THIS AREA
DO NOT WRITE IN THIS AREA

*(d) A student has two metal strips and a ruler, as shown in Figure 22.

A teacher tells the student that

- one metal strip is made of aluminium
- the other metal strip is made of stainless steel.

The student looks up data in a reference book, finding some density values:

density of aluminium = 2710 kg / m^3

density of stainless steel = 7850 kg / m^3

The student has access to more of the same metal strips, if needed, and may ask for any extra measuring devices.

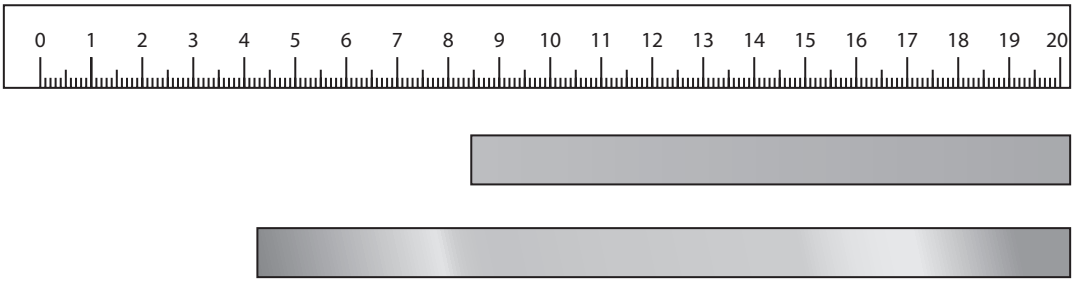

Figure 22

Plan how the student could confirm the teacher's statements, by determining the density of each of the strips as accurately as possible.

(6)

.....

.....

.....

.....

.....

.....

.....

.....

.....

.....

.....

.....

(Total for Question 9 = 13 marks)

DO NOT WRITE IN THIS AREA
DO NOT WRITE IN THIS AREA
DO NOT WRITE IN THIS AREA

DO NOT WRITE IN THIS AREA
DO NOT WRITE IN THIS AREA
DO NOT WRITE IN THIS AREA

BLANK PAGE

10 (a) Figure 23 shows some water in a tank.

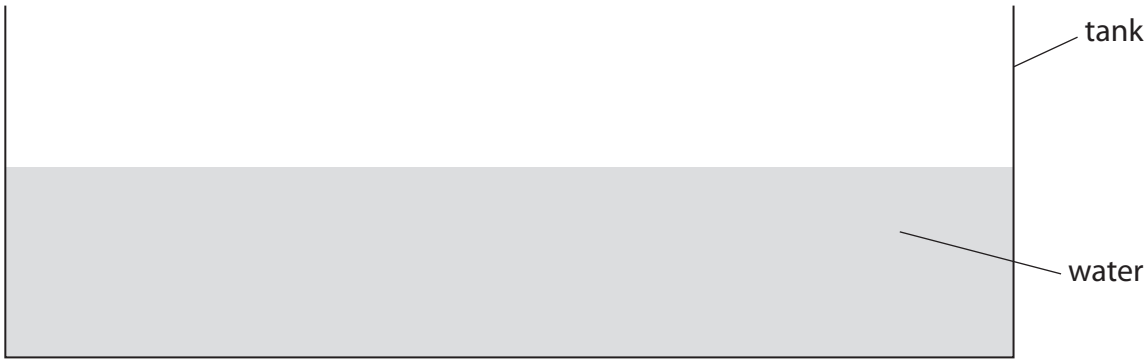

Figure 23

(i) The bottom of the tank has an area of 0.80 m^2.

The force on the bottom of the tank, due to the water, is 2400 N.

Calculate the pressure, due to the water, on the bottom of the tank.

(3)

pressure = ... Pa

(ii) More water is added to the tank.

Explain how the pressure on the bottom of the tank changes when more water is added to the tank.

(2)

.....

.....

.....

.....

DO NOT WRITE IN THIS AREA
DO NOT WRITE IN THIS AREA
DO NOT WRITE IN THIS AREA

(iii) Figure 24 shows an object on the bottom of the tank of water.

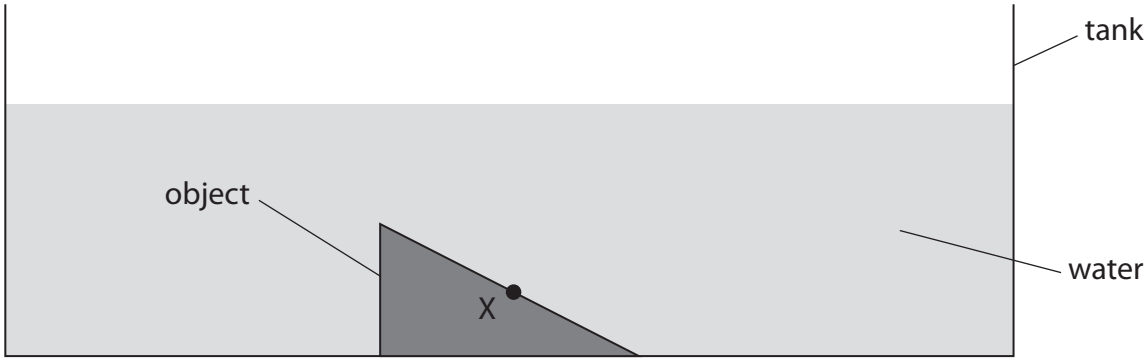

Figure 24

Draw an arrow on Figure 24 to show the direction of the force exerted by the water on the surface of the object at point X.

(1)

DO NOT WRITE IN THIS AREA
DO NOT WRITE IN THIS AREA
DO NOT WRITE IN THIS AREA

(b) Figure 25 is a graph showing how the atmospheric pressure changes with the height above sea level on the Earth's surface.

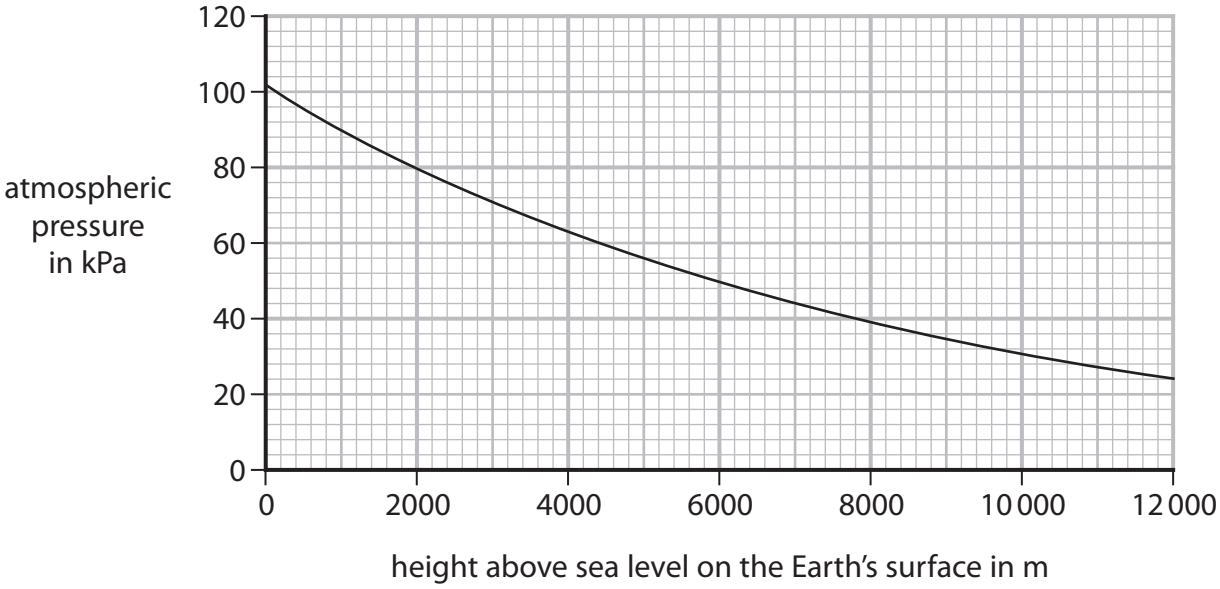

Figure 25

(i) An aeroplane descends from 6000 m to 2000 m.

Use the graph to find the change in atmospheric pressure as the aeroplane descends.

(2)

change in pressure = ... kPa

(ii) Suggest **one** reason why the atmospheric pressure is greater at 2000 m than at 6000 m.

(1)

.....

.....

DO NOT WRITE IN THIS AREA
DO NOT WRITE IN THIS AREA
DO NOT WRITE IN THIS AREA

(c) Figure 26 shows two drawings of the same person on a bed.

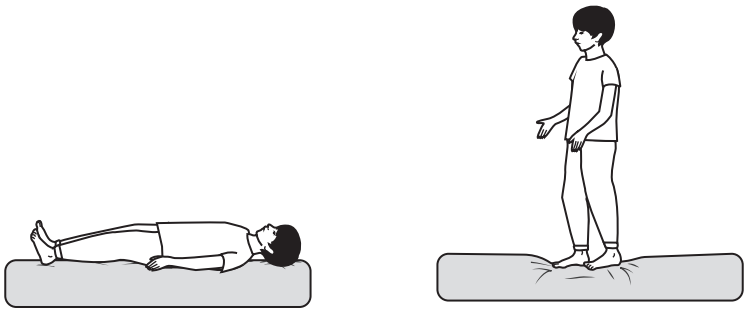

Figure 26

Explain why the person exerts a different pressure on the bed when standing up than when lying down.

(2)

.....

.....

.....

.....

(Total for Question 10 = 11 marks)

TOTAL FOR PAPER = 100 MARKS

DO NOT WRITE IN THIS AREA
DO NOT WRITE IN THIS AREA
DO NOT WRITE IN THIS AREA

BLANK PAGE

DO NOT WRITE IN THIS AREA
DO NOT WRITE IN THIS AREA
DO NOT WRITE IN THIS AREA

DO NOT WRITE IN THIS AREA
DO NOT WRITE IN THIS AREA
DO NOT WRITE IN THIS AREA

BLANK PAGE

Equations

(final velocity)^2 – (initial velocity)^2 = 2 × acceleration × distance $v^2 - u^2 = 2 \times a \times x$
energy transferred = current × potential difference × time $E = I \times V \times t$
potential difference across primary coil × current in primary coil = potential difference across secondary coil × current in secondary coil $V_p \times I_p = V_s \times I_s$
change in thermal energy = mass × specific heat capacity × change in temperature $\Delta Q = m \times c \times \Delta\theta$
thermal energy for a change of state = mass × specific latent heat $Q = m \times L$
to calculate pressure or volume for gases of fixed mass at constant temperature $P_1 V_1 = P_2 V_2$
energy transferred in stretching = 0.5 × spring constant × (extension)^2 $E = ½ \times k \times x^2$

DO NOT WRITE IN THIS AREA
DO NOT WRITE IN THIS AREA
DO NOT WRITE IN THIS AREA