Please check the examination details below before entering your candidate information

Candidate surname	Other names

Pearson Edexcel Level 1/Level 2 GCSE (9–1)

Centre Number | Candidate Number

Friday 12 June 2020

Morning (Time: 1 hour 45 minutes) | Paper Reference **1PH0/2H**

Physics

Paper 2

Higher Tier

You must have:
Calculator, ruler, protractor

Total Marks

Instructions

- Use **black** ink or ball-point pen.
- **Fill in the boxes** at the top of this page with your name, centre number and candidate number.
- Answer **all** questions.
- Answer the questions in the spaces provided – *there may be more space than you need.*
- Calculators may be used.
- Any diagrams may NOT be accurately drawn, unless otherwise indicated.
- You must **show all your working out** with **your answer clearly identified** at the **end of your solution**.

Information

- The total mark for this paper is 100.
- The marks for **each** question are shown in brackets – *use this as a guide as to how much time to spend on each question.*
- In questions marked with an **asterisk (*)**, marks will be awarded for your ability to structure your answer logically, showing how the points that you make are related or follow on from each other where appropriate.
- A list of equations is included at the end of this exam paper.

Advice

- Read each question carefully before you start to answer it.
- Try to answer every question.
- Check your answers if you have time at the end.

Turn over ▶

©2020 Pearson Education Ltd.
1/1/1/1/1/1/

P 6 2 0 7 7 A 0 1 4 0

Pearson

Answer ALL questions. Write your answers in the spaces provided.

Some questions must be answered with a cross in a box ☒.
If you change your mind about an answer, put a line through the box ☒ and then mark your new answer with a cross ☒.

1 (a) Figure 1 shows some forces acting on a seesaw.

The forces shown have the same magnitude but act in different directions.

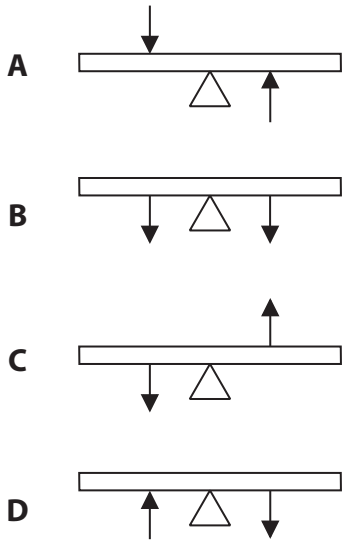

Figure 1

In which of these could the forces acting on a seesaw be in equilibrium?

(1)

☐ **A**

☐ **B**

☐ **C**

☐ **D**

DO NOT WRITE IN THIS AREA
DO NOT WRITE IN THIS AREA
DO NOT WRITE IN THIS AREA

(b) Figure 2 shows an open door.

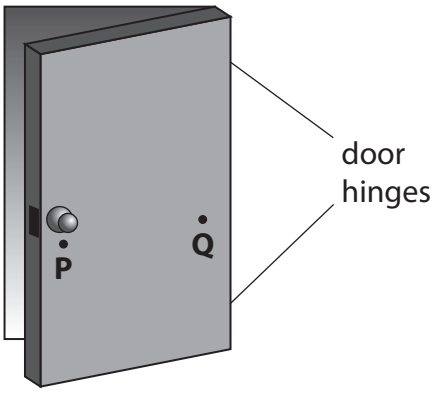

Figure 2

Explain why it is easier to close the door by pushing at point **P** rather than pushing at point **Q**.

(2)

.....

.....

.....

.....

DO NOT WRITE IN THIS AREA
DO NOT WRITE IN THIS AREA
DO NOT WRITE IN THIS AREA

(c) Figure 3 is a diagram of the forces acting on a swing.

The swing is not moving.

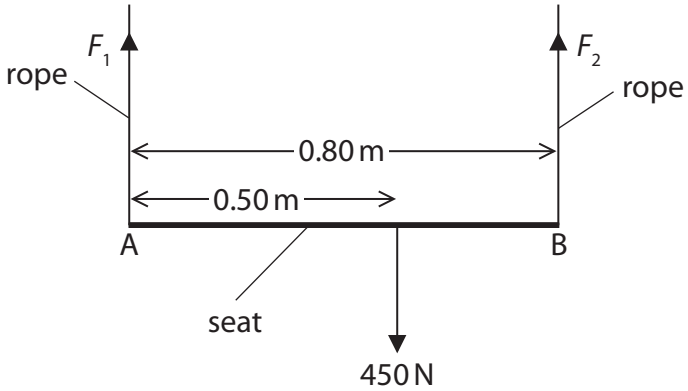

Figure 3

The seat of the swing, AB, is 0.80 m long.

A person of weight 450 N sits on the seat.

The person's weight acts at a distance of 0.50 m from A as shown in Figure 3.

Ignore the weight of the seat.

The upward forces exerted by the ropes on the seat are F_1 and F_2.

Calculate the force F_2 by taking moments about A.

(3)

force F_2 = ... N

(Total for Question 1 = 6 marks)

DO NOT WRITE IN THIS AREA
DO NOT WRITE IN THIS AREA
DO NOT WRITE IN THIS AREA

2 (a) Figure 4 shows a small piece of copper about 3 cm high.

© David J. Green/Alamy Stock Photo

Figure 4

A student wants to determine the density of copper.

The student uses a balance to measure the mass of the piece of copper.

(i) Explain how the student could measure the volume of the piece of copper.

(3)

.....

.....

.....

.....

.....

.....

(ii) The mass of the piece of copper is 0.058 kg.

The volume of the piece of copper is 6.5×10^{-6} m^3.

Calculate the density of copper.

(2)

density of copper = ... kg/m^3

DO NOT WRITE IN THIS AREA
DO NOT WRITE IN THIS AREA
DO NOT WRITE IN THIS AREA

(b) A student wants to determine the specific heat capacity of copper.

Figure 5 shows a piece of copper, with a thread tied around it, in a glass beaker of boiling water.

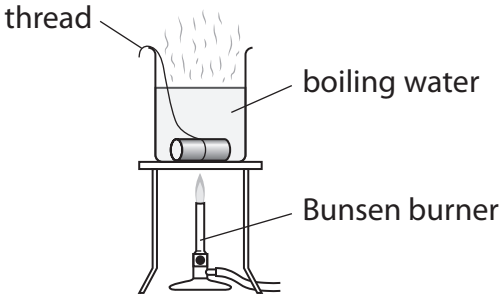

Figure 5

The student leaves the piece of copper in the boiling water so that the copper reaches a temperature of 100 °C.

The student uses the thread to take the piece of copper out of the boiling water.

The student puts the hot piece of copper into a different beaker of cold water at 20 °C.

The apparatus is shown in Figure 6.

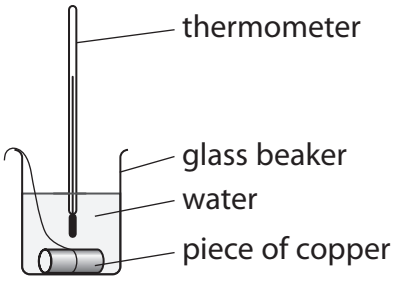

Figure 6

The student assumes that the thermal energy gained by the water equals the thermal energy lost by the piece of copper.

The water and copper both reach a temperature of 22 °C.

The cold water gains 1050 J of energy.

The mass of the piece of copper is 0.058 kg.

DO NOT WRITE IN THIS AREA
DO NOT WRITE IN THIS AREA
DO NOT WRITE IN THIS AREA

(i) Calculate a value for the specific heat capacity of copper, using these results.

Use the equation

change in thermal energy = mass × specific heat capacity × change in temperature

$$\Delta Q = m \times c \times \Delta\theta$$

(2)

specific heat capacity of copper from these results = ... J/kg°C

(ii) The value for the specific heat capacity of copper obtained from the student's results is lower than the correct value.

State **two** ways that the experiment could be improved to give a value that is closer to the correct value.

(2)

1 .....

.....

2 .....

.....

(Total for Question 2 = 9 marks)

DO NOT WRITE IN THIS AREA
DO NOT WRITE IN THIS AREA
DO NOT WRITE IN THIS AREA

3 (a) Figure 7 shows a drone.

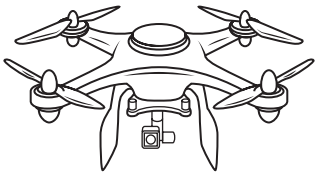

© Liubov Kotliar/123RF

Figure 7

The drone has four spinning blades.

The upward force produced enables the drone to rise in the air.

The speed at which the blades spin is measured in turns per minute.

Figure 8 shows how the upward force produced by the four blades depends on the speed at which the blades spin.

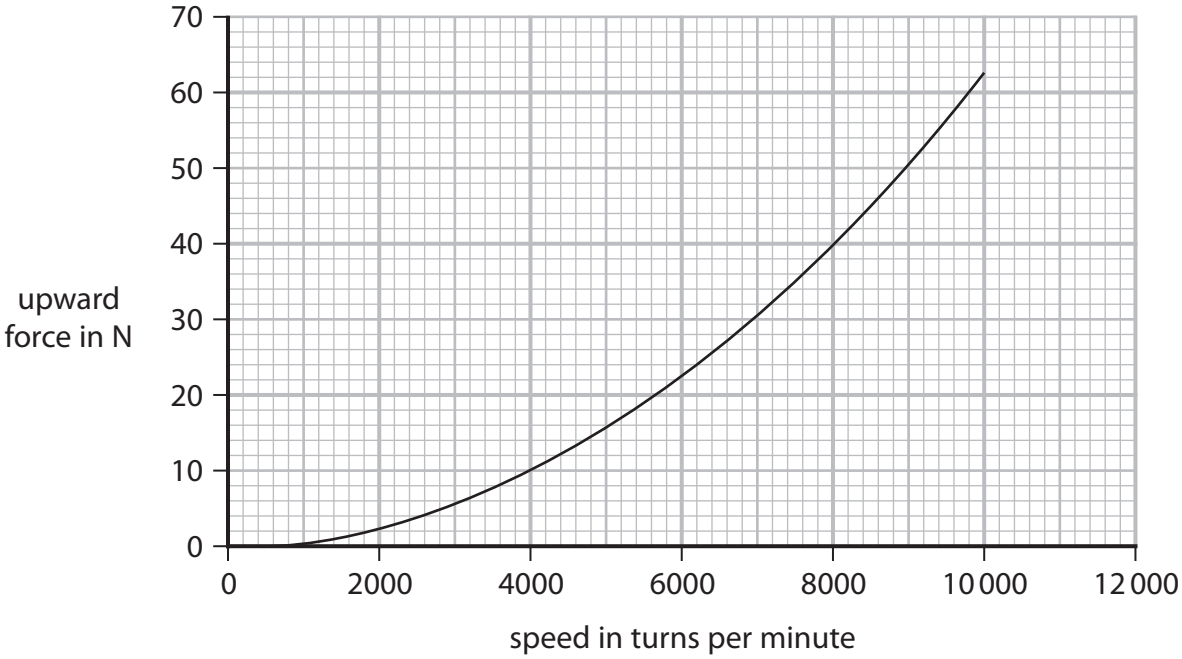

Figure 8

Describe the relationship between upward force and speed shown by this graph.

(2)

.....

.....

.....

.....

DO NOT WRITE IN THIS AREA
DO NOT WRITE IN THIS AREA
DO NOT WRITE IN THIS AREA

(b) A different drone has a mass of 4.5 kg.

This drone rises from the ground to a height of 20 m.

(i) Calculate the change in gravitational potential energy when the drone rises through a height of 20 m.

The gravitational field strength g = 10 N/kg.

(2)

change in gravitational potential energy = ... J

(ii) State the amount of useful work done by the blades as the drone rises through 20 m.

(1)

useful work done = ... J

(iii) It takes 4 s for the drone to rise through 20 m.

Calculate the useful power developed by the blades in this time of 4 s.

(2)

useful power developed = ... W

(Total for Question 3 = 7 marks)

DO NOT WRITE IN THIS AREA
DO NOT WRITE IN THIS AREA
DO NOT WRITE IN THIS AREA

BLANK PAGE

DO NOT WRITE IN THIS AREA
DO NOT WRITE IN THIS AREA
DO NOT WRITE IN THIS AREA

DO NOT WRITE IN THIS AREA
DO NOT WRITE IN THIS AREA
DO NOT WRITE IN THIS AREA

4 This question is about static electricity.

(a) A student has a rubber balloon tied to a long piece of cotton thread.

The student gives the balloon an overall electrostatic charge.

(i) Describe **one** way that the student could give the balloon an overall electrostatic charge.

(2)

.....

.....

.....

.....

(ii) The student gives the balloon an overall negative charge.

Which of these sentences explains why the overall charge on the balloon is negative?

(1)

☒ **A** Negative charge has been removed from the balloon.

☒ **B** Negative charge has been added to the balloon.

☒ **C** Positive charge has been removed from the balloon.

☒ **D** Positive charge has been added to the balloon.

(iii) The student charges another balloon on a long thread.

Explain how the student can show that the two balloons have the same type of charge.

(3)

.....

.....

.....

.....

.....

.....

(b) Figure 9 shows a plastic block and a metal disc with an insulating handle.

The top surface of the plastic block has a negative charge.

The metal disc has no overall electric charge.

Figure 9

A student uses the insulating handle to hold the metal disc above the plastic block.

(i) Which of these diagrams shows how the charge is distributed on the metal disc?

(1)

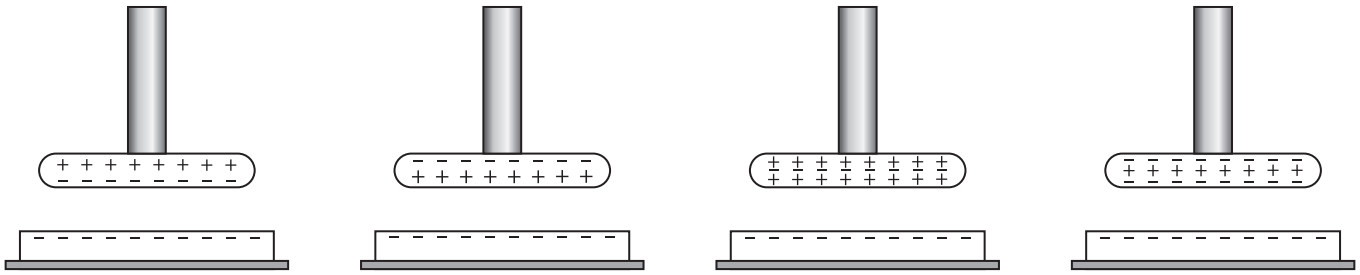

☒ **A** ☒ **B** ☒ **C** ☒ **D**

(ii) The student keeps holding the metal disc above the charged plastic block and taps the metal disc with a finger.

This earths the metal disc for a short time.

Explain why the disc now has an overall positive charge.

(2)

.....

.....

.....

.....

DO NOT WRITE IN THIS AREA
DO NOT WRITE IN THIS AREA
DO NOT WRITE IN THIS AREA

(iii) Figure 10 shows the charges on part of the metal disc and the plastic block.

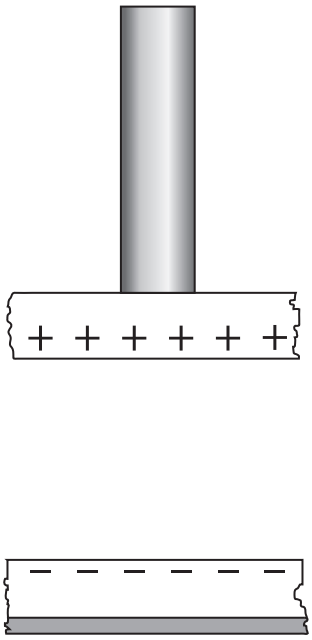

Figure 10

On Figure 10, draw lines to show the shape and direction of the electric field between the metal disc and the plastic block.

(2)

(Total for Question 4 = 11 marks)

DO NOT WRITE IN THIS AREA
DO NOT WRITE IN THIS AREA
DO NOT WRITE IN THIS AREA

5 Figure 11 shows the magnetic field of a magnet.

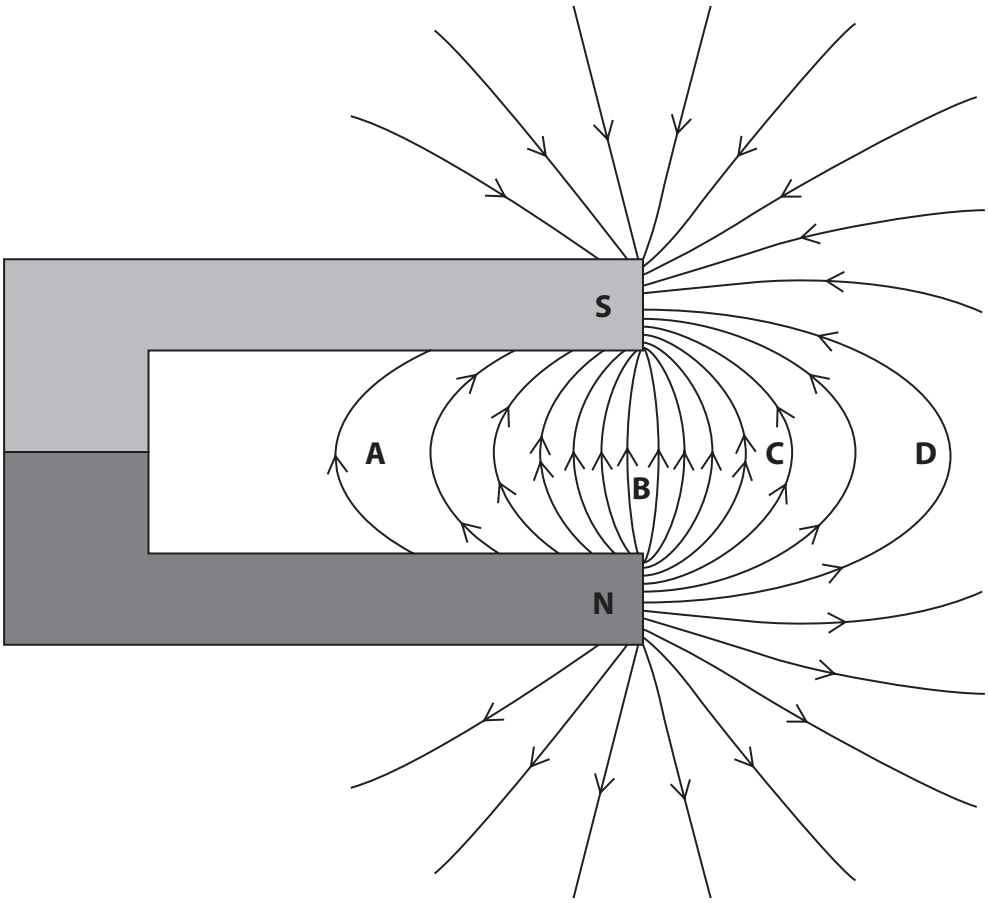

Figure 11

(a) At which point is the magnetic field strongest?

(1)

☒ **A**

☒ **B**

☒ **C**

☒ **D**

DO NOT WRITE IN THIS AREA
DO NOT WRITE IN THIS AREA
DO NOT WRITE IN THIS AREA

(b) Figure 12 shows a wire carrying a current.

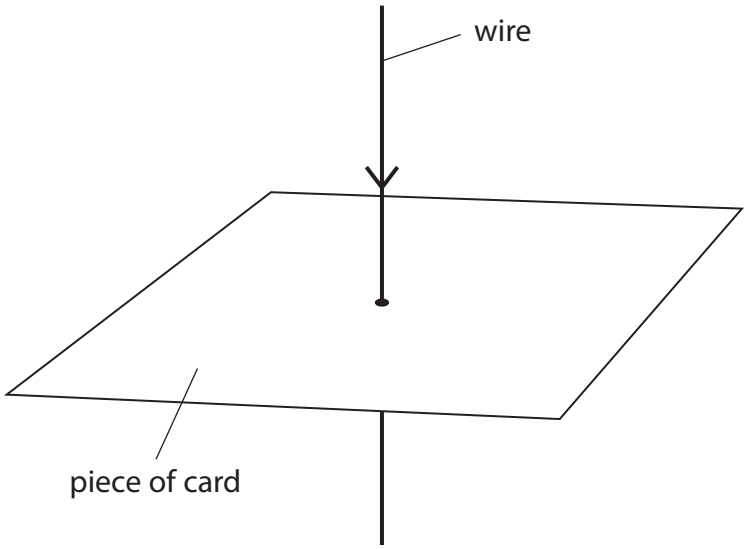

Figure 12

Draw, on the card in Figure 12, the magnetic field that is produced by the current.

(2)

DO NOT WRITE IN THIS AREA
DO NOT WRITE IN THIS AREA
DO NOT WRITE IN THIS AREA

(c) Figure 13 shows two metal rods carrying a current.

A metal roller touches both rods and completes the circuit.
The roller is in the magnetic field produced by a magnet.

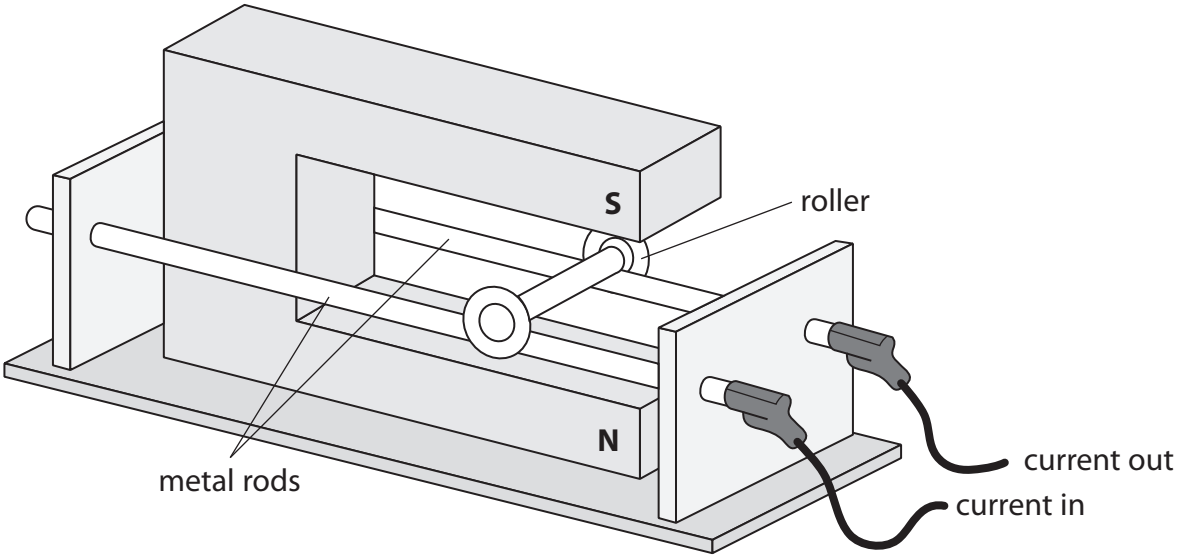

Figure 13

(i) The magnetic flux density of the magnetic field at the roller is 1.2 T.

The current in the roller is 2.5 A.

The length of the roller carrying the current is 0.060 m.

Calculate the force on the roller.

Use the equation

$$F = B \times I \times l$$

(2)

force on the roller = ... N

DO NOT WRITE IN THIS AREA
DO NOT WRITE IN THIS AREA
DO NOT WRITE IN THIS AREA

(ii) Describe how Fleming's left-hand rule can be used to determine the direction of the force acting on the roller.

You may draw a diagram to help your answer.

(3)

.....

.....

.....

.....

.....

.....

(iii) Draw an arrow on Figure 13 to show the direction of the force acting on the roller.

(1)

(Total for Question 5 = 9 marks)

DO NOT WRITE IN THIS AREA
DO NOT WRITE IN THIS AREA
DO NOT WRITE IN THIS AREA

6 Figure 14 shows a spring standing on a table.

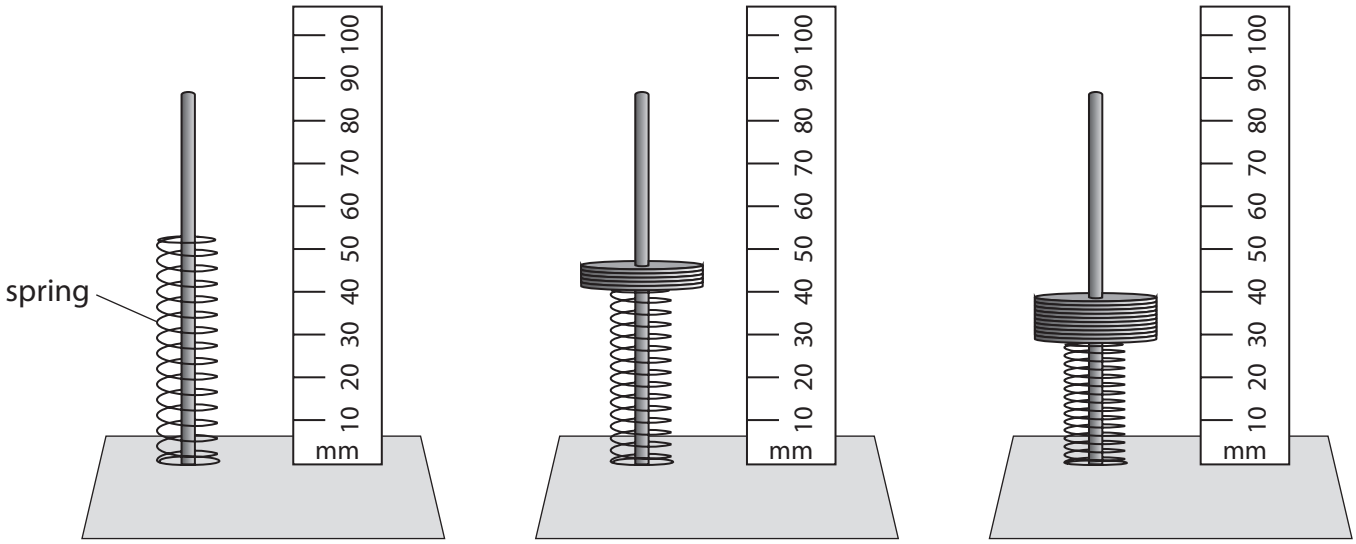

Figure 14a **Figure 14b** **Figure 14c**

Weights are added to the spring as shown in Figures 14b and 14c.

(a) (i) Estimate the original length of the spring as shown in Figure 14a.

(1)

original length = ... mm

(ii) Describe how the reduction in the length of the spring when weights are added can be determined.

(2)

.....

.....

.....

.....

DO NOT WRITE IN THIS AREA
DO NOT WRITE IN THIS AREA
DO NOT WRITE IN THIS AREA

(iii) State **two** ways that the experimental procedure could be improved.

(2)

1 .....

.....

2 .....

.....

(iv) Give **one** reason why the reduction in length eventually reaches a limit as more weights are added.

(1)

.....

.....

(b) A different spring is extended.

A force of 0.50 N gives an extension of 13 mm.

Calculate the spring constant *k* in N/m.

(3)

spring constant *k* = ... N/m

DO NOT WRITE IN THIS AREA
DO NOT WRITE IN THIS AREA
DO NOT WRITE IN THIS AREA

(c) Another spring is extended.

The work done to extend the spring is 0.14 J.

The spring constant of the spring is 175 N/m.

Calculate the extension of the spring.

Use an equation selected from the list of equations at the end of this paper.

(3)

extension of spring = ... m

(Total for Question 6 = 12 marks)

DO NOT WRITE IN THIS AREA
DO NOT WRITE IN THIS AREA
DO NOT WRITE IN THIS AREA

DO NOT WRITE IN THIS AREA
DO NOT WRITE IN THIS AREA
DO NOT WRITE IN THIS AREA

BLANK PAGE

7 (a) Figure 15 shows three stages of a magnet moving into and then out of a coil of wire.

The coil is connected to a milliammeter.

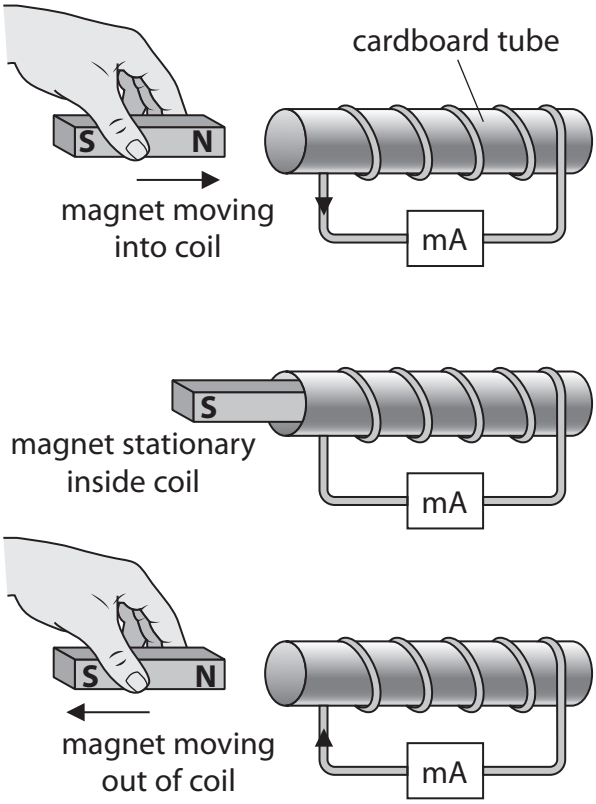

Figure 15

(i) Which row of the table shows the deflection on the milliammeter for the three stages in Figure 15?

(1)

		magnet moving into coil	magnet stationary inside coil	magnet moving out of coil
☒	**A**			
☒	**B**	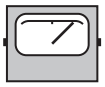	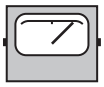	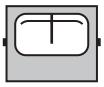
☒	**C**	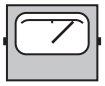		
☒	**D**	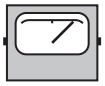	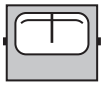	

Figure 16

DO NOT WRITE IN THIS AREA
DO NOT WRITE IN THIS AREA
DO NOT WRITE IN THIS AREA

(ii) Give **two** ways of increasing the deflections on the milliammeter shown in Figure 16.

(2)

1 .....

.....

2 .....

.....

(b) Figure 17 is a diagram representing a loudspeaker.

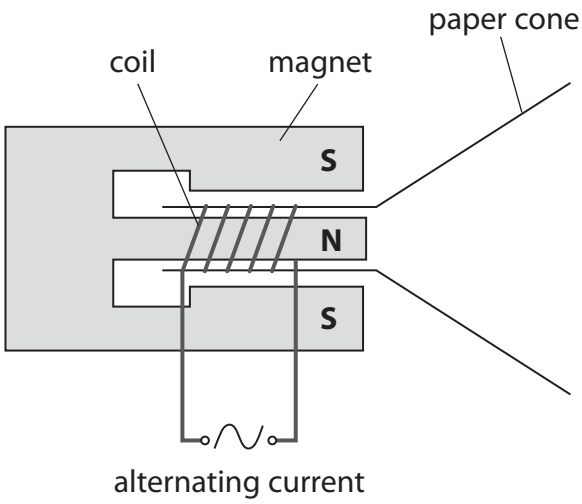

Figure 17

Explain how sound is produced when an alternating current is supplied to the coil of the loudspeaker.

(4)

.....

.....

.....

.....

.....

.....

.....

.....

DO NOT WRITE IN THIS AREA
DO NOT WRITE IN THIS AREA
DO NOT WRITE IN THIS AREA

(c) Figure 18 shows a transformer.

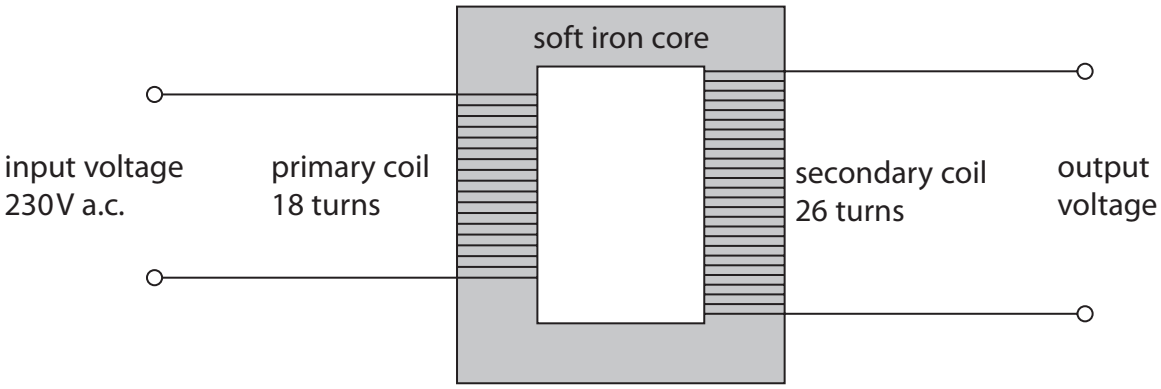

Figure 18

(i) State the purpose of the transformer shown in Figure 18.

(1)

.....

(ii) Calculate the output voltage of the secondary coil.

Use an equation selected from the list of equations at the end of this paper.

(3)

output voltage = ... V

(Total for Question 7 = 11 marks)

DO NOT WRITE IN THIS AREA
DO NOT WRITE IN THIS AREA
DO NOT WRITE IN THIS AREA

DO NOT WRITE IN THIS AREA
DO NOT WRITE IN THIS AREA
DO NOT WRITE IN THIS AREA

BLANK PAGE

8 (a) A student investigates resistors connected in parallel using a number of resistors. Each resistor has the same resistance.

Figure 19 shows a circuit diagram with one resistor, R.

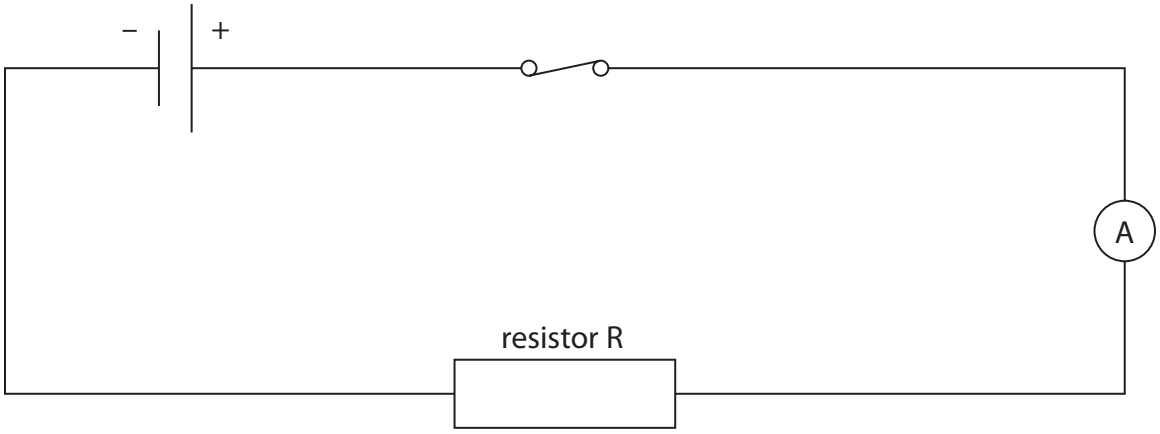

Figure 19

(i) Add to Figure 19:

- a voltmeter to find the potential difference across resistor R
- another resistor in parallel with resistor R.

(2)

(ii) State the measurements that the student must take to find the overall resistance of the resistors in parallel.

(2)

.....

.....

.....

.....

DO NOT WRITE IN THIS AREA
DO NOT WRITE IN THIS AREA
DO NOT WRITE IN THIS AREA

(iii) The student investigates how the overall resistance of the circuit changes when additional resistors are added in parallel to R.

Each resistor has the same resistance.

Figure 20 shows the results of the student's investigation.

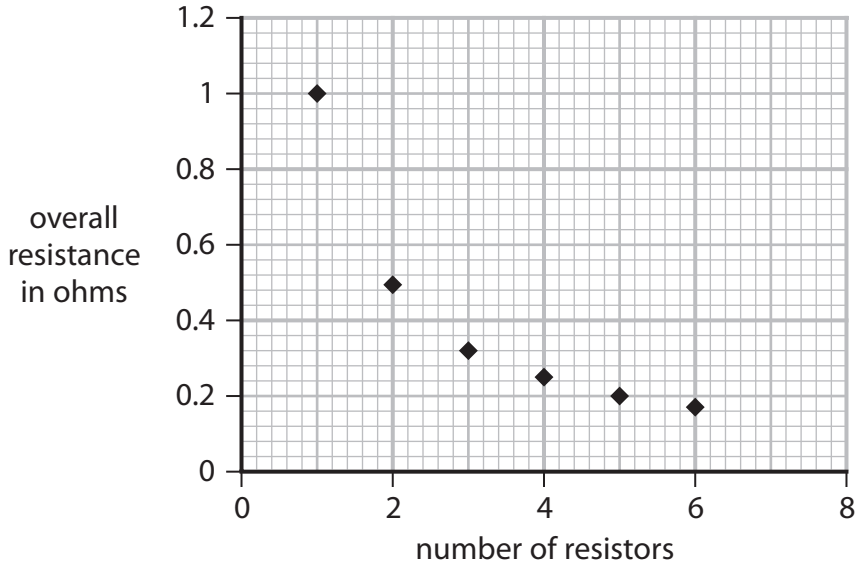

Figure 20

State the resistance of a single resistor.

(1)

resistance = ... Ω

(iv) Comment on the relationship between the overall resistance of the circuit and the number of resistors in parallel.

Use information from Figure 20 to support your answer.

(3)

.....

.....

.....

.....

.....

.....

.....

.....

DO NOT WRITE IN THIS AREA
DO NOT WRITE IN THIS AREA
DO NOT WRITE IN THIS AREA

(b) A different circuit is then set up with two resistors as shown in Figure 21.

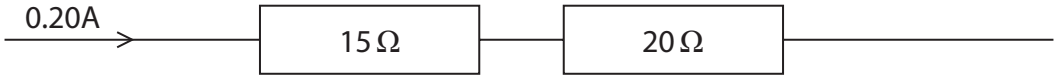

Figure 21

(i) Calculate the potential difference across the 15 Ω resistor.

(2)

potential difference = ... V

(ii) Calculate the total power dissipated when there is a current of 0.20 A in the two resistors.

Use the equation

$$P = I^2 \times R$$

(2)

power produced ..... W

(Total for Question 8 = 12 marks)

DO NOT WRITE IN THIS AREA
DO NOT WRITE IN THIS AREA
DO NOT WRITE IN THIS AREA

DO NOT WRITE IN THIS AREA
DO NOT WRITE IN THIS AREA
DO NOT WRITE IN THIS AREA

BLANK PAGE

9 (a) The magnitude and direction of a force can be represented by a vector.
Figure 22 shows the forces acting on four identical trolleys. The arrows show the magnitude and direction of the forces.

Which diagram shows a pair of forces that will produce zero acceleration?

(1)

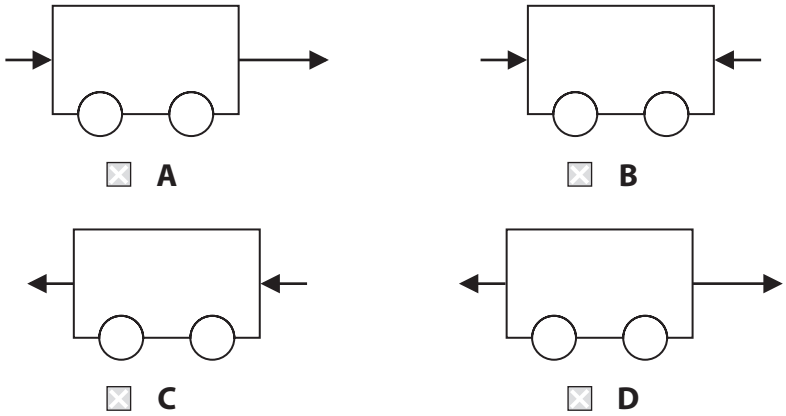

Figure 22

DO NOT WRITE IN THIS AREA
DO NOT WRITE IN THIS AREA
DO NOT WRITE IN THIS AREA

(b) Figure 23 shows two small boats pulling a much larger ship.

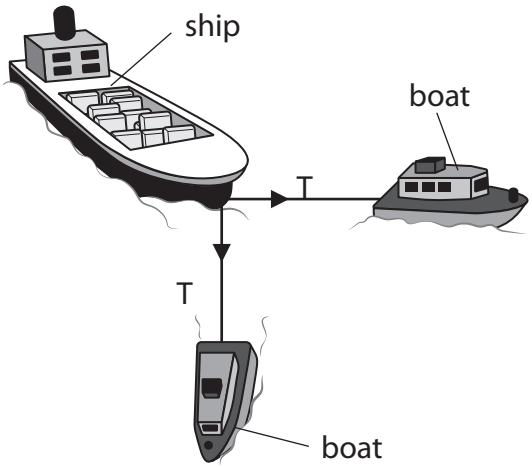

Figure 23

The ship is connected to the boats with ropes.

The tension, T, in each of the ropes has a magnitude of 20 kN.

The ropes are at right angles to each other.

Draw a vector diagram and use it to determine the resultant force that the boats exert on the ship.

(4)

magnitude of resultant force on the ship = ... kN

DO NOT WRITE IN THIS AREA
DO NOT WRITE IN THIS AREA
DO NOT WRITE IN THIS AREA

*(c) Figure 24 shows a wooden block connected to a weight by a string.
The string goes over a pulley.

The surfaces of the table and the wooden block are both rough.

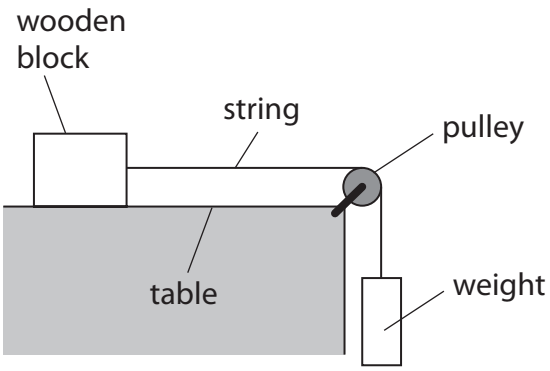

Figure 24

The wooden block moves across the table at a constant horizontal velocity.

Several vertical and horizontal forces act on the wooden block as it moves.

Explain how the forces keep the wooden block moving across the table at a constant horizontal velocity.

Your answer should refer to all forces acting on the wooden block.

You may add to the diagram to help with your answer.

(6)

.....

.....

.....

.....

.....

.....

.....

.....

.....

.....

.....

(Total for Question 9 =11 marks)

DO NOT WRITE IN THIS AREA
DO NOT WRITE IN THIS AREA
DO NOT WRITE IN THIS AREA

10 (a) Figure 25 shows four identical metal cans, each filled with water to the same level.

Each can has three tubes.

Water comes out of each tube.

Which of these shows the correct pattern of water coming out of the tubes?

(1)

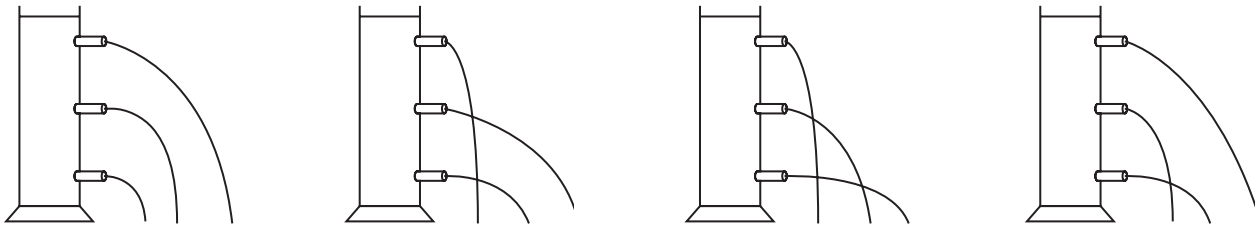

☒ **A** ☒ **B** ☒ **C** ☒ **D**

Figure 25

DO NOT WRITE IN THIS AREA
DO NOT WRITE IN THIS AREA
DO NOT WRITE IN THIS AREA

(b) Figure 26 shows a glass U-tube containing water of density 1000 kg/m^3.

The water levels are the same on both sides of the U-tube.

Both ends of the U-tube are open to the atmosphere.

Atmospheric pressure is 101 000 N/m^2.

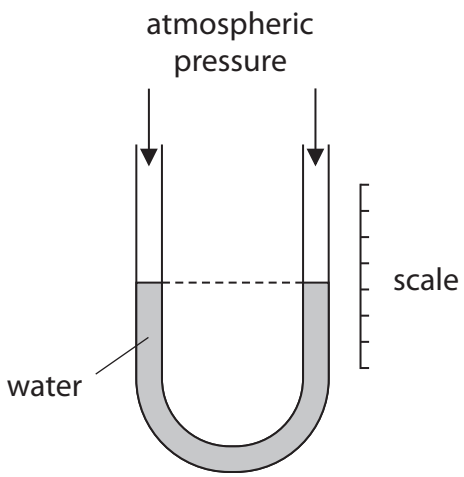

Figure 26

Figure 27 shows the U-tube with one side connected to a gas supply.

The difference in the levels of water, *h*, is 0.200 m.

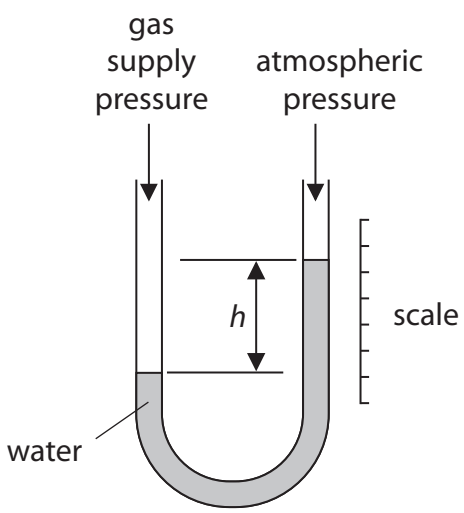

Figure 27

DO NOT WRITE IN THIS AREA
DO NOT WRITE IN THIS AREA
DO NOT WRITE IN THIS AREA

(i) Calculate the gas supply pressure.
Use an equation selected from the list of equations at the end of the paper.

(3)

pressure of gas supply = ... N/m^2

(ii) The measurement is repeated using a U-tube of larger cross-sectional area.

Explain why the value of *h* does not change.

(2)

.....

.....

.....

.....

DO NOT WRITE IN THIS AREA
DO NOT WRITE IN THIS AREA
DO NOT WRITE IN THIS AREA

*(c) Figure 28 shows a cross-section of a boat floating in water and the same boat with a load inside.

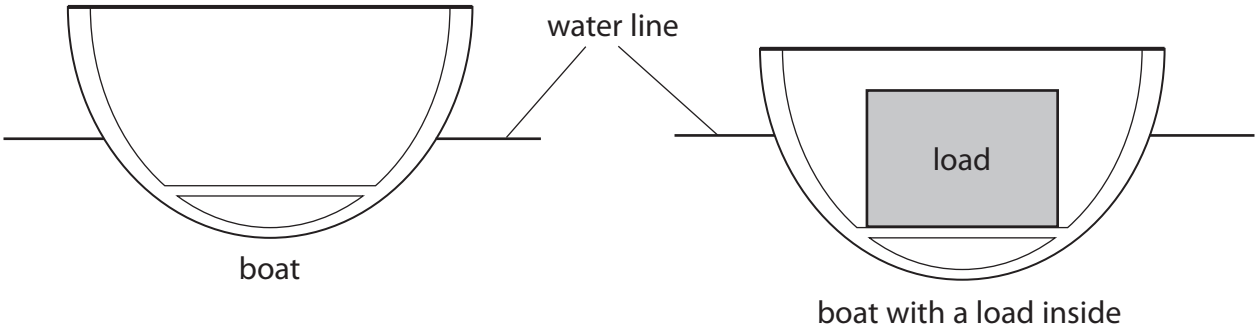

Figure 28

The boat floats lower in the water when there is a load inside the boat.

Explain why the boat floats in water and why the boat floats lower in the water when there is a load inside the boat.

You may add to the diagram to help with your answer.

(6)

.....

.....

.....

.....

.....

.....

.....

.....

.....

.....

.....

.....

(Total for Question 10 = 12 marks)

TOTAL FOR PAPER = 100 MARKS

DO NOT WRITE IN THIS AREA
DO NOT WRITE IN THIS AREA
DO NOT WRITE IN THIS AREA

DO NOT WRITE IN THIS AREA
DO NOT WRITE IN THIS AREA
DO NOT WRITE IN THIS AREA

BLANK PAGE

BLANK PAGE

DO NOT WRITE IN THIS AREA
DO NOT WRITE IN THIS AREA
DO NOT WRITE IN THIS AREA

DO NOT WRITE IN THIS AREA
DO NOT WRITE IN THIS AREA
DO NOT WRITE IN THIS AREA

BLANK PAGE

Equations

(final velocity)^2 – (initial velocity)^2 = 2 × acceleration × distance $v^2 - u^2 = 2 \times a \times x$
force = change in momentum ÷ time $F = \frac{(mv - mu)}{t}$
energy transferred = current × potential difference × time $E = I \times V \times t$
force on a conductor at right angles to a magnetic field carrying a current = magnetic flux density × current × length $F = B \times I \times l$
$\frac{\text{voltage across primary coil}}{\text{voltage across secondary coil}} = \frac{\text{number of turns in primary coil}}{\text{number of turns in secondary coil}}$ $\frac{V_p}{V_s} = \frac{N_p}{N_s}$
potential difference across primary coil × current in primary coil = potential difference across secondary coil × current in secondary coil $V_p \times I_p = V_s \times I_s$
change in thermal energy = mass × specific heat capacity × change in temperature $\Delta Q = m \times c \times \Delta\theta$
thermal energy for a change of state = mass × specific latent heat $Q = m \times L$
to calculate pressure or volume for gases of fixed mass at constant temperature $P_1 V_1 = P_2 V_2$
energy transferred in stretching = 0.5 × spring constant × (extension)^2 $E = ½ \times k \times x^2$
pressure due to a column of liquid = height of column × density of liquid × gravitational field strength $P = h \times \rho \times g$

DO NOT WRITE IN THIS AREA
DO NOT WRITE IN THIS AREA
DO NOT WRITE IN THIS AREA