Please check the examination details below before entering your candidate information

Candidate surname	Other names

Centre Number | Candidate Number

Pearson Edexcel
Level 1/Level 2 GCSE (9–1)

Friday 12 June 2020

Morning (Time: 1 hour 45 minutes) | Paper Reference **1PH0/2F**

Physics

Paper 2

Foundation Tier

You must have:
Calculator, ruler, protractor

Total Marks

Instructions

- Use **black** ink or ball-point pen.
- **Fill in the boxes** at the top of this page with your name, centre number and candidate number.
- Answer **all** questions.
- Answer the questions in the spaces provided – *there may be more space than you need.*
- Calculators may be used.
- Any diagrams may NOT be accurately drawn, unless otherwise indicated.
- You must **show all your working out** with **your answer clearly identified** at the **end of your solution**.

Information

- The total mark for this paper is 100.
- The marks for **each** question are shown in brackets – *use this as a guide as to how much time to spend on each question.*
- In questions marked with an **asterisk (*)**, marks will be awarded for your ability to structure your answer logically, showing how the points that you make are related or follow on from each other where appropriate.
- A list of equations is included at the end of this exam paper.

Advice

- Read each question carefully before you start to answer it.
- Try to answer every question.
- Check your answers if you have time at the end.

Turn over ▶

©2020 Pearson Education Ltd.
1/1/1/1/1/1/1/

P 6 2 0 7 6 A 0 1 4 0

Pearson

Answer ALL questions. Write your answers in the spaces provided.

Some questions must be answered with a cross in a box ☒.
If you change your mind about an answer, put a line through the box ☒ and then mark your new answer with a cross ☒.

1 (a) Figure 1 shows an object under the surface of the sea.

(i) Which arrow shows where the pressure on the object is greatest?

(1)

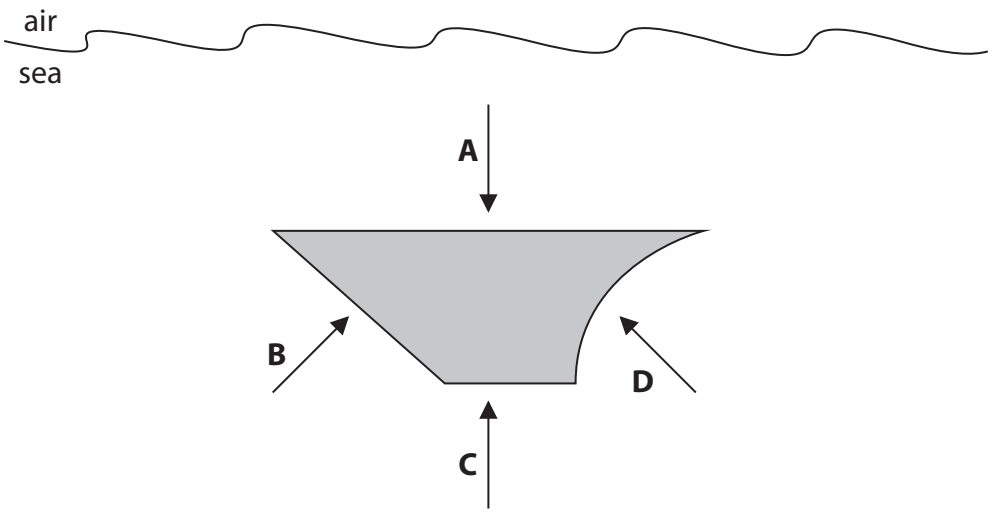

Figure 1

☐ **A**

☐ **B**

☐ **C**

☐ **D**

DO NOT WRITE IN THIS AREA
DO NOT WRITE IN THIS AREA
DO NOT WRITE IN THIS AREA

(ii) Figure 2 shows two blocks of stone resting on the bottom of the sea.

Both blocks have the same height.

Area Y is 4 times bigger than area X.

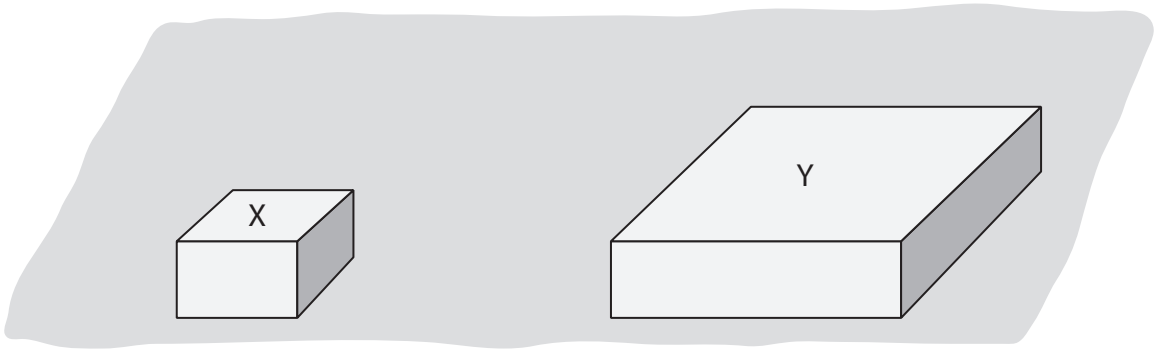

Figure 2

What is the pressure due to the water on the top surface of block Y?

(1)

☒ **A** one quarter of the pressure on X

☒ **B** the same as the pressure on X

☒ **C** twice the pressure on X

☒ **D** four times the pressure on X

DO NOT WRITE IN THIS AREA
DO NOT WRITE IN THIS AREA
DO NOT WRITE IN THIS AREA

(b) A diver is swimming underwater in a lake.

The diver wears the meter shown in Figure 3.

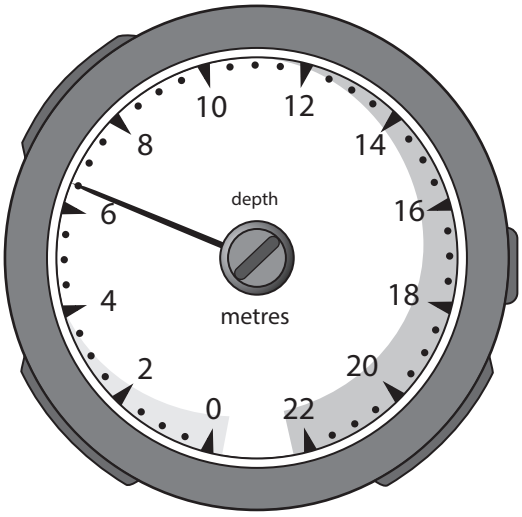

Figure 3

(i) The meter shows the depth of the diver below the surface of the water.

State the depth shown on the meter in Figure 3.

State the unit.

(2)

depth = ... unit = ...

(ii) State how the pressure of the water on the diver changes as the diver swims down from the surface of the lake.

(1)

.....

.....

(iii) State why the total pressure on the diver is greater than just the pressure due to the water above the diver.

(1)

.....

.....

DO NOT WRITE IN THIS AREA
DO NOT WRITE IN THIS AREA
DO NOT WRITE IN THIS AREA

(c) An aeroplane takes off from the ground.

State **two** factors that affect the pressure of the atmosphere on the aeroplane as the aeroplane goes higher in the atmosphere.

(2)

1 .....

.....

2 .....

.....

(Total for Question 1 = 8 marks)

DO NOT WRITE IN THIS AREA
DO NOT WRITE IN THIS AREA
DO NOT WRITE IN THIS AREA

2 (a) Figure 4 shows the inside of a mains plug.

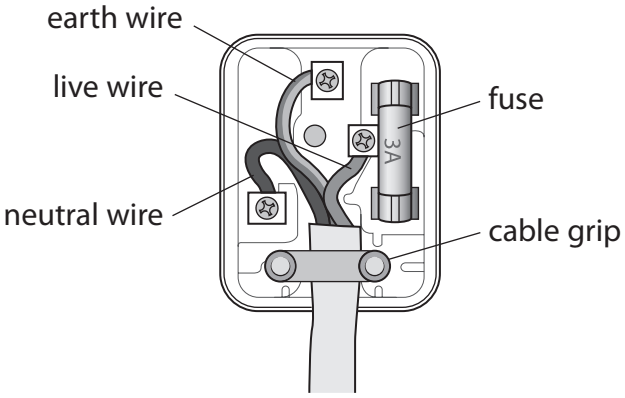

Figure 4

The mains plug has three safety features.

One of these safety features has been ticked in the table.

Put **two** more ticks in the table to show the other two safety features.

(2)

part of plug	safety feature
cable grip	✓
earth wire	
fuse	
live wire	
neutral wire	

DO NOT WRITE IN THIS AREA
DO NOT WRITE IN THIS AREA
DO NOT WRITE IN THIS AREA

(b) Figure 5 shows a charger for a car battery.

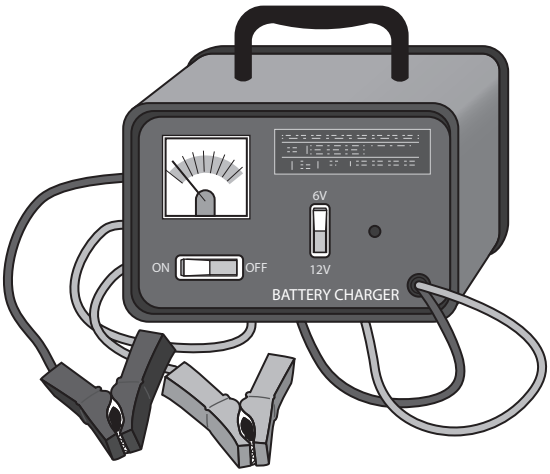

Figure 5

(i) The meter on the battery charger shows the current supplied to a battery.

The meter on the battery charger is

(1)

☒ **A** an ammeter

☒ **B** an ohmmeter

☒ **C** a voltmeter

☒ **D** a wattmeter

(ii) The battery charger supplies a steady current of 2.5 A to the battery.

Calculate the charge flowing to the battery in 8 minutes.

Use the equation

$$\text{charge} = \text{current} \times \text{time}$$

(2)

charge = ... C

DO NOT WRITE IN THIS AREA
DO NOT WRITE IN THIS AREA
DO NOT WRITE IN THIS AREA

(c) The transformer in another battery charger has a primary coil and a secondary coil.

The voltage across the primary coil = 230 V.

The voltage across the secondary coil = 15 V.

The current in the secondary coil is 3.1 A.

Calculate the current in the primary coil.

Use the equation

$$\text{primary current} = \frac{\text{secondary voltage} \times \text{secondary current}}{\text{primary voltage}}$$

(2)

current = ... A

(Total for Question 2 = 7 marks)

DO NOT WRITE IN THIS AREA
DO NOT WRITE IN THIS AREA
DO NOT WRITE IN THIS AREA

DO NOT WRITE IN THIS AREA
DO NOT WRITE IN THIS AREA
DO NOT WRITE IN THIS AREA

BLANK PAGE

3 (a) (i) Figure 6 shows two gears.

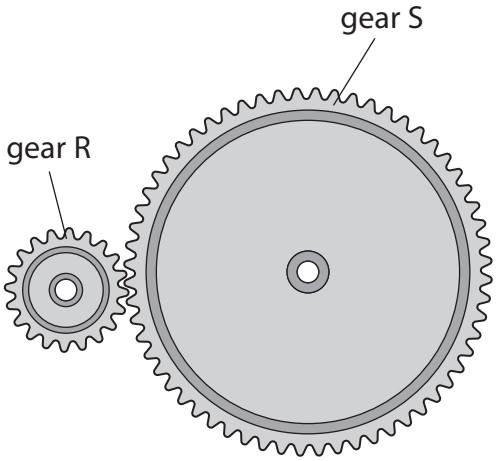

Figure 6

Gear R and gear S can rotate.

Gear R has 20 teeth.

Gear S has 60 teeth.

Gear S rotates through 2 complete revolutions.

Calculate how many complete revolutions gear R rotates by.

(2)

gear R has rotated through ..... revolutions

DO NOT WRITE IN THIS AREA
DO NOT WRITE IN THIS AREA
DO NOT WRITE IN THIS AREA

(ii) Figure 7 shows two gears, S and T.

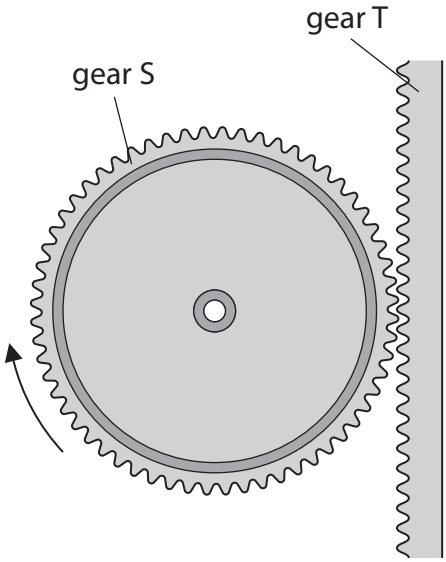

Figure 7

Gear S can rotate on a fixed axle.

Gear T can move up and down.

Gear S has 60 teeth.

The distance between each of the teeth on gear S and on gear T is 2 mm.

Gear S moves through one complete revolution in the direction shown.

Which of these describes the motion of gear T?

(1)

☒ **A** 60 mm up

☒ **B** 60 mm down

☒ **C** 120 mm up

☒ **D** 120 mm down

DO NOT WRITE IN THIS AREA
DO NOT WRITE IN THIS AREA
DO NOT WRITE IN THIS AREA

(b) (i) Figure 8 shows a force of 70 N turning a lever about point P.

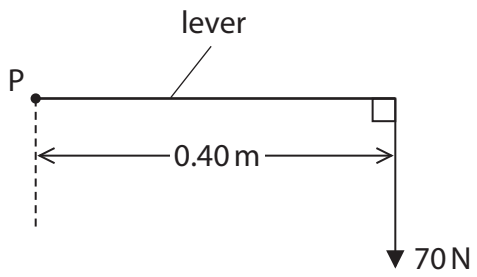

Figure 8

Calculate the moment of the 70 N force about point P.

State the unit.

Use the equation

moment = force × distance normal to the direction of the force

(3)

moment = ... unit .....

DO NOT WRITE IN THIS AREA
DO NOT WRITE IN THIS AREA
DO NOT WRITE IN THIS AREA

(ii) Figure 9 shows a worker using a wheelbarrow to move some sand.

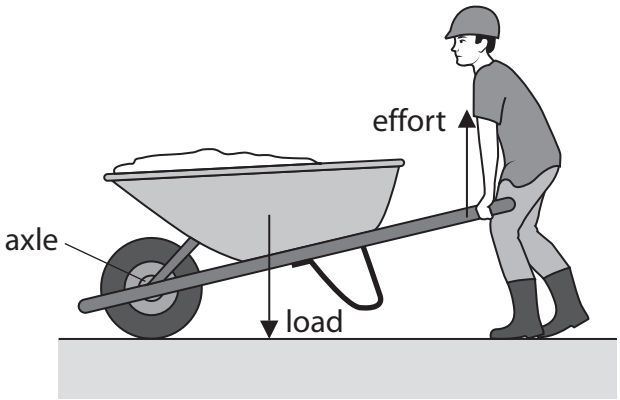

Figure 9

The load is equal to the total weight of the sand and the wheelbarrow.

The effort is the force that the worker applies to the wheelbarrow handles.

The worker applies just enough effort to lift the load.

Explain why the effort is smaller than the load.

(2)

.....

.....

.....

.....

(iii) Some sand falls down and sticks between the wheel and the axle.

State why it might be harder to push the wheelbarrow along when there is some sand between the wheel and the axle.

(1)

.....

.....

(Total for Question 3 = 9 marks)

DO NOT WRITE IN THIS AREA
DO NOT WRITE IN THIS AREA
DO NOT WRITE IN THIS AREA

4 Figure 10 shows a toy used to launch a ball.

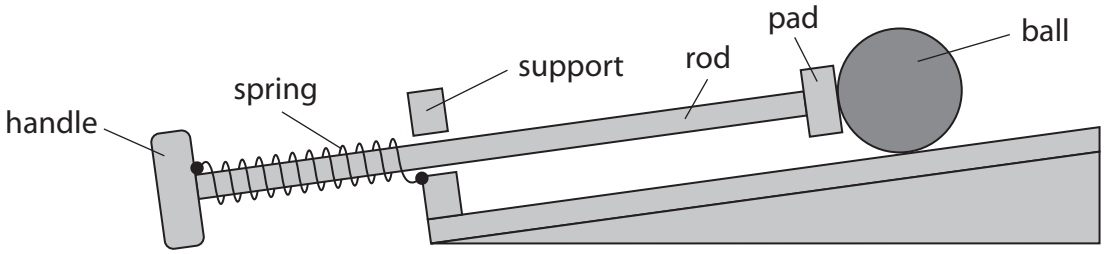

Figure 10

One end of the spring is fixed to the handle.

The other end of the spring is fixed to the support.

(a) A child pulls the handle, stretching the spring.

Figure 11 shows the toy with the spring stretched.

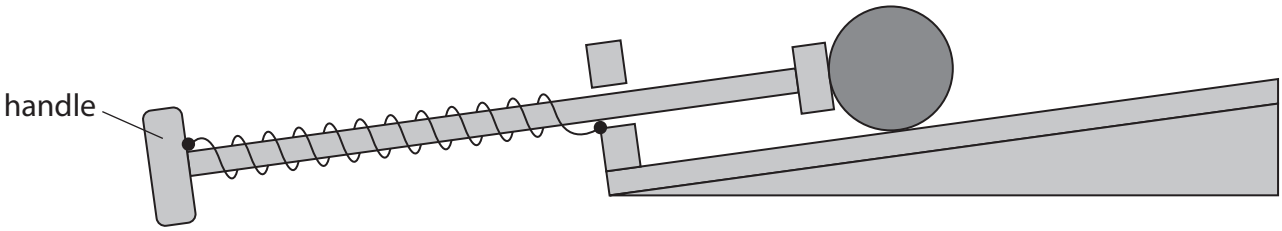

Figure 11

(i) Which of these shows the forces acting on the handle when the child keeps the spring stretched?

Ignore the force due to gravity.

(1)

☒ **A** ☒ **B** ☒ **C** ☒ **D**

DO NOT WRITE IN THIS AREA
DO NOT WRITE IN THIS AREA
DO NOT WRITE IN THIS AREA

(ii) In Figure 11, the extension of the spring is 0.070 m.

The spring constant (k) is 20 N/m.

Calculate the force used to extend the spring.

Use the equation

$$\text{force} = k \times \text{extension}$$

(2)

force = ... N

(b) The child pulls the handle until the pad is against the support as shown in Figure 12.

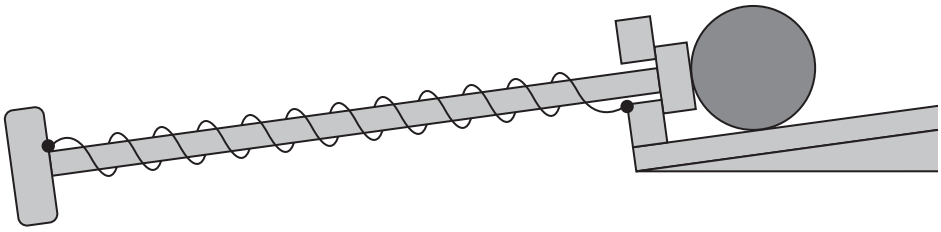

Figure 12

(i) The extension of the spring is 0.09 m.

The spring constant (k) is 20 N/m.

Calculate the work done in extending the spring by 0.09 m.

Use the equation

$$\text{work done} = \tfrac{1}{2} \times k \times (\text{extension})^2$$

(2)

work done = ... J

DO NOT WRITE IN THIS AREA
DO NOT WRITE IN THIS AREA
DO NOT WRITE IN THIS AREA

(ii) The child lets go of the handle.

The ball starts to move.

The spring returns to its original length.

Describe the energy transfer that takes place when the ball starts to move.

(2)

.....

.....

.....

.....

(iii) The child can only stretch the spring until the pad is pressing against the support.

Explain how the design of the toy prevents the spring from becoming damaged.

(2)

.....

.....

.....

.....

(Total for Question 4 = 9 marks)

DO NOT WRITE IN THIS AREA
DO NOT WRITE IN THIS AREA
DO NOT WRITE IN THIS AREA

5 (a) Figure 13 shows a part of a machine used to separate steel cans from aluminium cans.

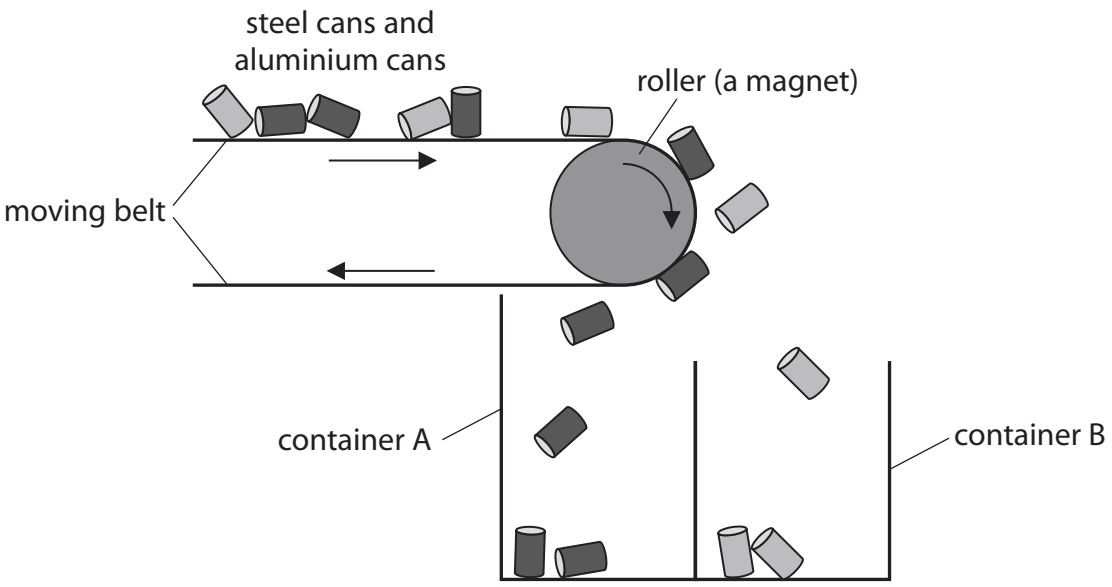

Figure 13

The cans are carried along a moving belt.

The belt goes around a roller.

The roller is a magnet.

Each can falls into one of the containers.

Explain how this machine separates the steel cans from the aluminium cans.

(2)

.....

.....

.....

.....

DO NOT WRITE IN THIS AREA
DO NOT WRITE IN THIS AREA
DO NOT WRITE IN THIS AREA

(b) A student investigates magnetism using two toys as shown in Figure 14.

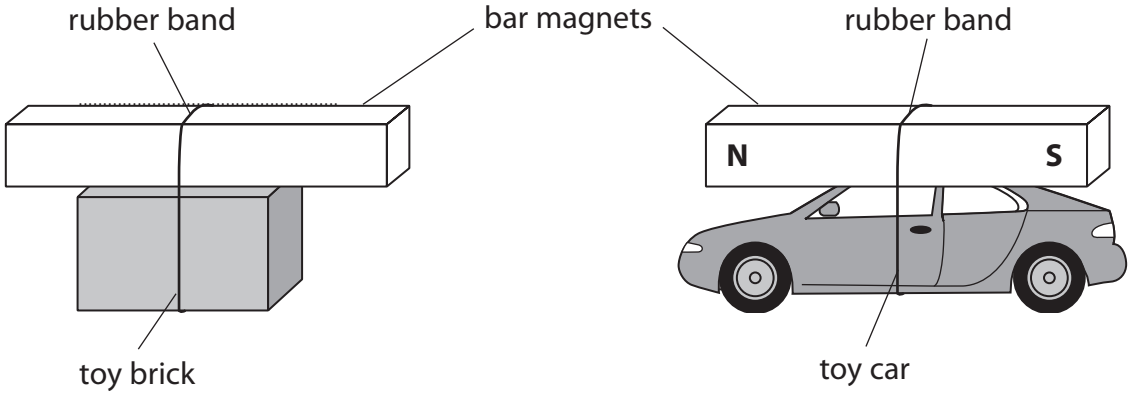

Figure 14

(i) There is a magnet attached to the top of each toy.

The student moves the toy brick towards the toy car.

The magnet on the toy brick repels the magnet on the toy car.

On Figure 14, label the north pole and the south pole on the magnet attached to the toy brick.

(1)

(ii) Explain why the toy car starts to move only when the toy brick gets near to the toy car.

(2)

.....

.....

.....

.....

DO NOT WRITE IN THIS AREA
DO NOT WRITE IN THIS AREA
DO NOT WRITE IN THIS AREA

(iii) The student thinks that two magnets on top of each other will produce a magnetic field that is stronger than the magnetic field from a single magnet.

The student has a metre rule and more magnets available.

Describe how the student could develop this investigation to test this theory.

(4)

.....

.....

.....

.....

.....

.....

.....

.....

(Total for Question 5 = 9 marks)

DO NOT WRITE IN THIS AREA
DO NOT WRITE IN THIS AREA
DO NOT WRITE IN THIS AREA

6 A student investigates resistors connected in series in an electrical circuit.

The student has

- a 3.0 V battery
- a 22 Ω resistor
- a resistor marked X.

The student does not know the value of the resistor marked X.

The student decides to measure the potential difference (voltage) across resistor X.

Figure 15 shows the circuit that the student connected.

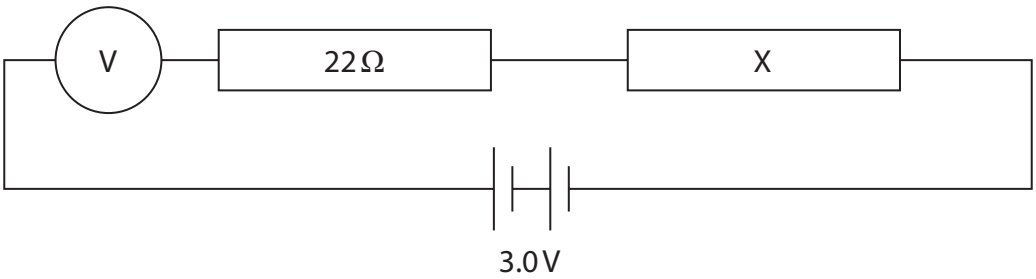

Figure 15

(a) The circuit is connected incorrectly.

Describe how the student should correct the mistake.

(2)

.....

.....

.....

.....

DO NOT WRITE IN THIS AREA
DO NOT WRITE IN THIS AREA
DO NOT WRITE IN THIS AREA

(b) The student corrects the mistake.

The voltage across resistor X is 2.1 V.

The circuit is connected to a 3 V battery.

(i) State the value of the voltage across the 22 Ω resistor.

(1)

voltage across 22 Ω resistor = ... V

(ii) The current in resistor X is 0.041 A.

The voltage across resistor X is 2.1 V.

Show that the resistance of resistor X must be about 50 ohms.

Use the equation

$$V = I \times R$$

(2)

(iii) Calculate the power in resistor X when the voltage across X is 2.1 V and the current in resistor X is 0.041 A.

(2)

power = ... W

(iv) Calculate the overall resistance of the 22 ohm resistor and resistor X.

(2)

overall resistance = ... Ω

DO NOT WRITE IN THIS AREA
DO NOT WRITE IN THIS AREA
DO NOT WRITE IN THIS AREA

(v) The current in the circuit is 0.041 A.

The voltage across the battery is 3.0 V.

Calculate the energy transferred in 2 minutes.

Use the equation

$$E = I \times V \times t$$

(2)

energy = ... J

(Total for Question 6 = 11 marks)

DO NOT WRITE IN THIS AREA
DO NOT WRITE IN THIS AREA
DO NOT WRITE IN THIS AREA

DO NOT WRITE IN THIS AREA
DO NOT WRITE IN THIS AREA
DO NOT WRITE IN THIS AREA

BLANK PAGE

7 Figure 16 shows a metal container with a movable piston.

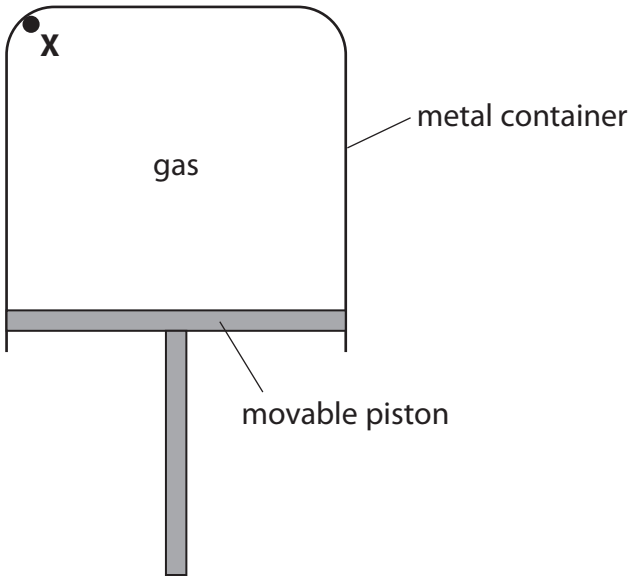

Figure 16

Point X is on the inner surface of the container.

The gas in the container is at a higher pressure than the air outside the container.

(a) Which of these shows the direction of the force, due to the gas, on the container at point X?

(1)

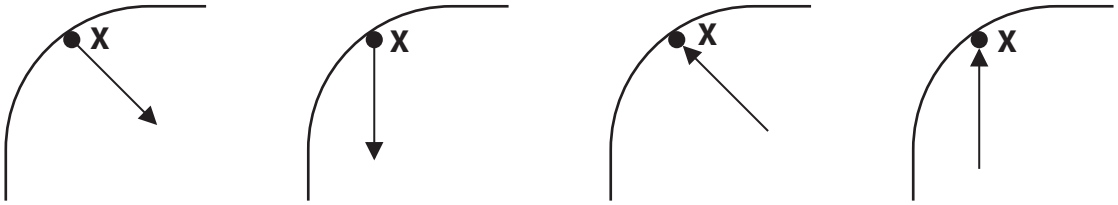

☒ **A** ☒ **B** ☒ **C** ☒ **D**

DO NOT WRITE IN THIS AREA
DO NOT WRITE IN THIS AREA
DO NOT WRITE IN THIS AREA

(b) The pressure of the gas in Figure 16 (P_1) is 120 kPa.

The volume of the gas in Figure 16 (V_1) is 2500 cm^3.

The piston is pushed up slowly so that the temperature of the gas does not change.

The new volume of the gas (V_2) is 1600 cm^3.

Calculate the new pressure of the gas, P_2.

Use the equation

$$P_2 = \frac{P_1 \times V_1}{V_2}$$

(2)

new pressure, P_2 = ... kPa

DO NOT WRITE IN THIS AREA
DO NOT WRITE IN THIS AREA
DO NOT WRITE IN THIS AREA

(c) Figure 17 shows a bicycle pump with a closed end.

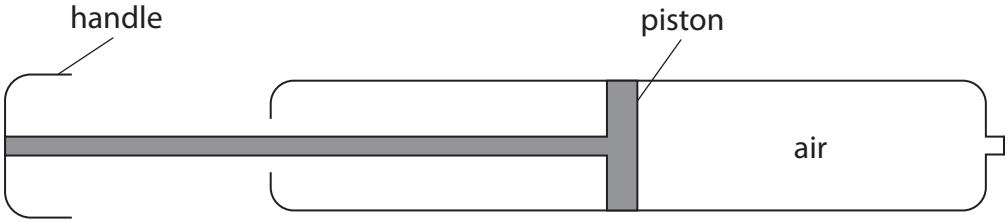

Figure 17

The area of the piston is 2 cm^2.

A force of 28 N is applied to the piston.

Calculate the pressure, in N/cm^2, of the piston on the air in the bicycle pump.

(3)

pressure = ... N/cm^2

DO NOT WRITE IN THIS AREA
DO NOT WRITE IN THIS AREA
DO NOT WRITE IN THIS AREA

*(d) A container is sealed so that the mass of the gas inside cannot change.

The volume of the gas is changed and the pressure is measured at different volumes.

The temperature of the gas does not change.

Figure 18 is a graph of the results.

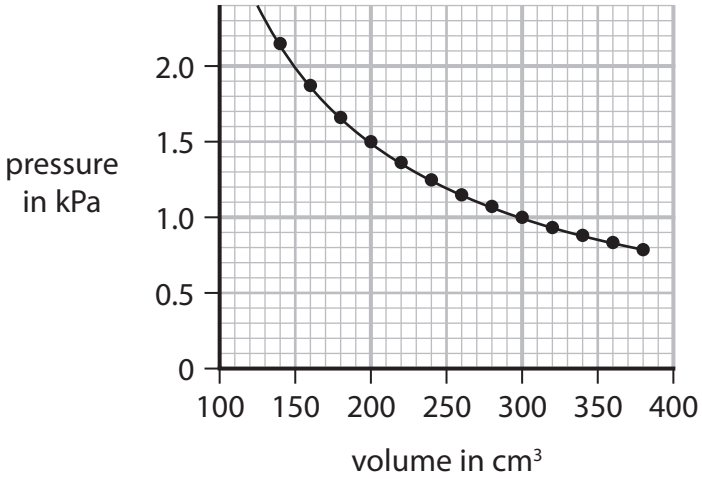

Figure 18

Explain, in terms of the movement of particles, why there is a pressure on the container and why the pressure changes as shown in Figure 18.

(6)

.....

.....

.....

.....

.....

.....

.....

.....

.....

.....

.....

.....

.....

(Total for Question 7 = 12 marks)

DO NOT WRITE IN THIS AREA
DO NOT WRITE IN THIS AREA
DO NOT WRITE IN THIS AREA

BLANK PAGE

DO NOT WRITE IN THIS AREA
DO NOT WRITE IN THIS AREA
DO NOT WRITE IN THIS AREA

8 (a) Figure 19 shows a small piece of copper about 3 cm high.

© David J. Green/Alamy Stock Photo

Figure 19

A student wants to determine the density of copper.

The student uses a balance to measure the mass of the piece of copper.

(i) Explain how the student could measure the volume of the piece of copper.

(3)

.....

.....

.....

.....

.....

.....

(ii) The mass of the piece of copper is 0.058 kg.

The volume of the piece of copper is 6.5×10^{-6} m^3.

Calculate the density of copper.

(2)

density of copper = ... kg / m^3

DO NOT WRITE IN THIS AREA
DO NOT WRITE IN THIS AREA
DO NOT WRITE IN THIS AREA

(b) A student wants to determine the specific heat capacity of copper.

Figure 20 shows a piece of copper, with a thread tied around it, in a glass beaker of boiling water.

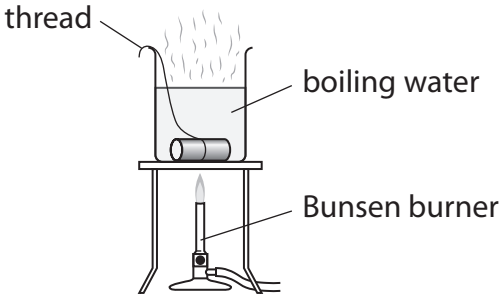

Figure 20

The student leaves the piece of copper in the boiling water so that the copper reaches a temperature of 100 °C.

The student uses the thread to take the piece of copper out of the boiling water.

The student puts the hot piece of copper into a different beaker of cold water at 20 °C.

The apparatus is shown in Figure 21.

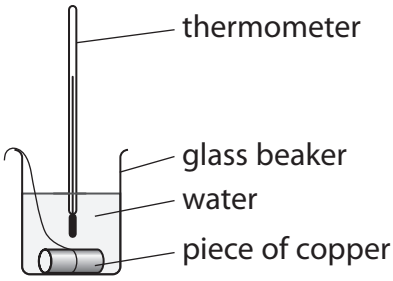

Figure 21

The student assumes that the thermal energy gained by the water equals the thermal energy lost by the piece of copper.

The water and copper both reach a temperature of 22 °C.

The cold water gains 1050 J of energy.

The mass of the piece of copper is 0.058 kg.

DO NOT WRITE IN THIS AREA
DO NOT WRITE IN THIS AREA
DO NOT WRITE IN THIS AREA

(i) Calculate a value for the specific heat capacity of copper, using these results.

Use the equation

change in thermal energy = mass × specific heat capacity × change in temperature

$$\Delta Q = m \times c \times \Delta\theta$$

(2)

specific heat capacity of copper from these results = ... J/kg °C

(ii) The value for the specific heat capacity of copper obtained from the student's results is lower than the correct value.

State **two** ways that the experiment could be improved to give a value that is closer to the correct value.

(2)

1 .....

.....

2 .....

.....

DO NOT WRITE IN THIS AREA
DO NOT WRITE IN THIS AREA
DO NOT WRITE IN THIS AREA

(c) A long piece of wire is made into a coil as shown in Figure 22.

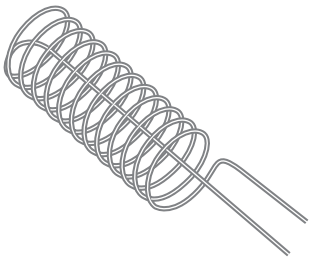

Figure 22

The coil is connected to a low voltage power supply.

Describe how this coil could be used instead of the Bunsen burner in Figure 20.

(2)

.....

.....

.....

.....

(Total for Question 8 = 11 marks)

DO NOT WRITE IN THIS AREA
DO NOT WRITE IN THIS AREA
DO NOT WRITE IN THIS AREA

DO NOT WRITE IN THIS AREA
DO NOT WRITE IN THIS AREA
DO NOT WRITE IN THIS AREA

BLANK PAGE

9 (a) Figure 23 shows a drone.

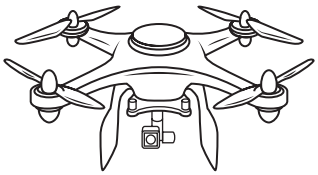

© Liubov Kotliar/123RF

Figure 23

The drone has four spinning blades.

The upward force produced enables the drone to rise in the air.

The speed at which the blades spin is measured in turns per minute.

Figure 24 shows how the upward force produced by the four blades depends on the speed at which the blades spin.

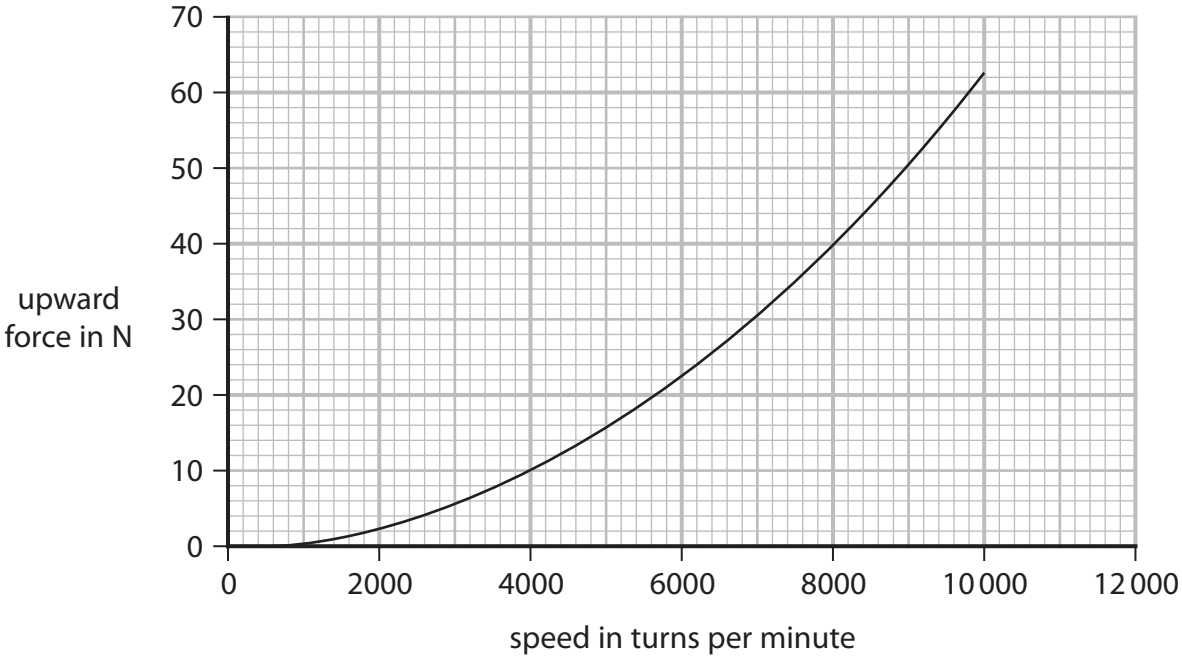

Figure 24

Describe the relationship between upward force and speed shown by this graph.

(2)

.....

.....

.....

.....

DO NOT WRITE IN THIS AREA
DO NOT WRITE IN THIS AREA
DO NOT WRITE IN THIS AREA

(b) A different drone has a mass of 4.5 kg.

This drone rises from the ground to a height of 20 m.

(i) Calculate the change in gravitational potential energy when the drone rises through a height of 20 m.

The gravitational field strength g = 10 N/kg.

(2)

change in gravitational potential energy = ... J

(ii) State the amount of useful work done by the blades as the drone rises through 20 m.

(1)

useful work done = ... J

(iii) It takes 4 s for the drone to rise through 20 m.

Calculate the useful power developed by the blades in this time of 4 s.

(2)

useful power developed = ... W

DO NOT WRITE IN THIS AREA
DO NOT WRITE IN THIS AREA
DO NOT WRITE IN THIS AREA

*(c) The blades on the drone are turned by electric motors.

The electric motors are powered by a battery.

Figure 25 represents the energy transfers involved when the drone rises from the ground.

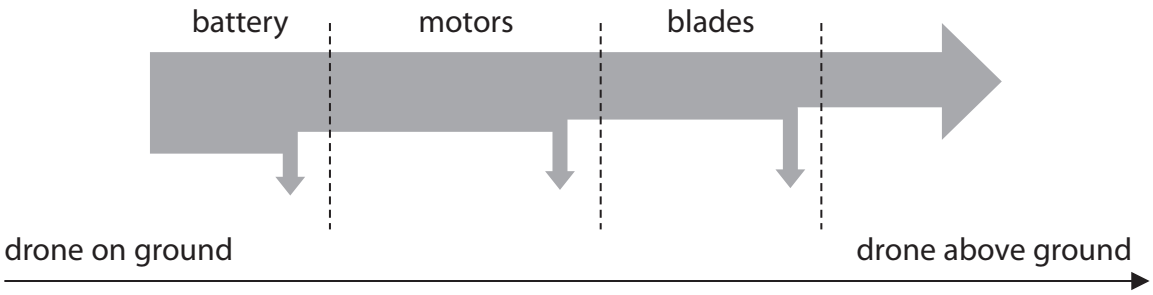

Figure 25

Describe the changes in the way energy is stored when the drone rises from the ground.

Your answer should refer to energy transfers.

(6)

.....

.....

.....

.....

.....

.....

.....

.....

.....

.....

.....

(Total for Question 9 = 13 marks)

DO NOT WRITE IN THIS AREA
DO NOT WRITE IN THIS AREA
DO NOT WRITE IN THIS AREA

DO NOT WRITE IN THIS AREA
DO NOT WRITE IN THIS AREA
DO NOT WRITE IN THIS AREA

10 This question is about static electricity.

(a) A student has a rubber balloon tied to a long piece of cotton thread.

The student gives the balloon an overall electrostatic charge.

(i) Describe **one** way that the student could give the balloon an overall electrostatic charge.

(2)

.....

.....

.....

.....

(ii) The student gives the balloon an overall negative charge.

Which of these sentences explains why the overall charge on the balloon is negative?

(1)

☒ **A** Negative charge has been removed from the balloon.

☒ **B** Negative charge has been added to the balloon.

☒ **C** Positive charge has been removed from the balloon.

☒ **D** Positive charge has been added to the balloon.

(iii) The student charges another balloon on a long thread.

Explain how the student can show that the two balloons have the same type of charge.

(3)

.....

.....

.....

.....

.....

.....

(b) Figure 26 shows a plastic block and a metal disc with an insulating handle.

The top surface of the plastic block has a negative charge.

The metal disc has no overall electric charge.

Figure 26

A student uses the insulating handle to hold the metal disc above the plastic block.

(i) Which of these diagrams shows how the charge is distributed on the metal disc?

(1)

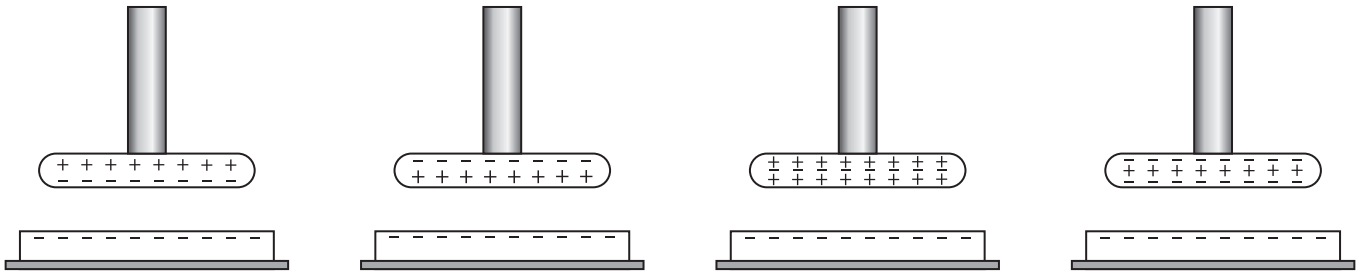

☒ **A** ☒ **B** ☒ **C** ☒ **D**

(ii) The student keeps holding the metal disc above the charged plastic block and taps the metal disc with a finger.

This earths the metal disc for a short time.

Explain why the disc now has an overall positive charge.

(2)

.....

.....

.....

.....

DO NOT WRITE IN THIS AREA
DO NOT WRITE IN THIS AREA
DO NOT WRITE IN THIS AREA

(iii) Figure 27 shows the charges on part of the metal disc and the plastic block.

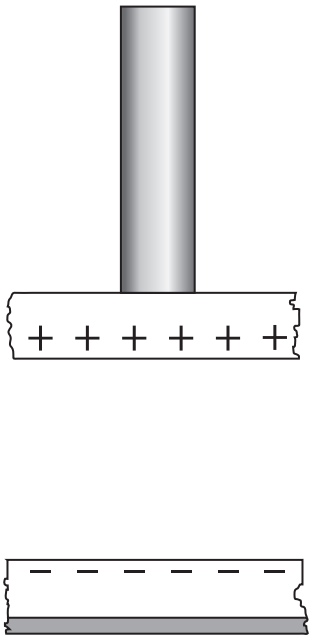

Figure 27

On Figure 27, draw lines to show the shape and direction of the electric field between the metal disc and the plastic block.

(2)

(Total for Question 10 = 11 marks)

TOTAL FOR PAPER = 100 MARKS

DO NOT WRITE IN THIS AREA
DO NOT WRITE IN THIS AREA
DO NOT WRITE IN THIS AREA

Equations

(final velocity)^2 – (initial velocity)^2 = 2 × acceleration × distance $v^2 - u^2 = 2 \times a \times x$
energy transferred = current × potential difference × time $E = I \times V \times t$
potential difference across primary coil × current in primary coil = potential difference across secondary coil × current in secondary coil $V_p \times I_p = V_s \times I_s$
change in thermal energy = mass × specific heat capacity × change in temperature $\Delta Q = m \times c \times \Delta\theta$
thermal energy for a change of state = mass × specific latent heat $Q = m \times L$
to calculate pressure or volume for gases of fixed mass at constant temperature $P_1 V_1 = P_2 V_2$
energy transferred in stretching = 0.5 × spring constant × (extension)^2 $E = ½ \times k \times x^2$

DO NOT WRITE IN THIS AREA
DO NOT WRITE IN THIS AREA
DO NOT WRITE IN THIS AREA