Please check the examination details below before entering your candidate information

| Candidate surname | Other names |
|---|---|
| | |

Centre Number | Candidate Number

# Pearson Edexcel Level 1/Level 2 GCSE (9–1)

## Monday 16 June 2025

Morning (Time: 1 hour 45 minutes)

Paper reference **1PH0/2H**

# Physics
## PAPER 2

**Higher Tier**

**You must have:**
Calculator, ruler, Equation Booklet (enclosed)

Total Marks

## Instructions

- Use **black** ink or ball-point pen.
- **Fill in the boxes** at the top of this page with your name, centre number and candidate number.
- Answer **all** questions.
- Answer the questions in the spaces provided – *there may be more space than you need.*
- Calculators may be used.
- Any diagrams may NOT be accurately drawn, unless otherwise indicated.
- You must show **all your working out** with **your answer clearly identified** at the end of your solution.

## Information

- The total mark for this paper is 100.
- The marks for **each** question are shown in brackets – *use this as a guide as to how much time to spend on each question.*
- In questions marked with an **asterisk (*)**, marks will be awarded for your ability to structure your answer logically, showing how the points that you make are related or follow on from each other where appropriate.

## Advice

- Read each question carefully before you start to answer it.
- Try to answer every question.
- Check your answers if you have time at the end.

*Turn over*


©2025 Pearson Education Ltd.
Y:1/1/1/1/1/1/1/1/1/1/1/1/1/

P 7 8 7 3 3 R A 0 1 4 0

Pearson

**Answer ALL questions. Write your answers in the spaces provided.**

**Some questions must be answered with a cross in one of the four boxes ☒. If you change your mind about an answer, put a line through the box ☒ and then mark your new answer with a cross ☒.**

**1** Figure 1 shows a pool full of water.

(Source: © AnaKulagina/Shutterstock)

**Figure 1**

(a) (i) The pressure on the ground due to the water in the pool is 3500 Pa.

The density of water is $10^3$ kg / m$^3$.

The gravitational field strength, $g$, = 10 N / kg.

Calculate the depth of the water in the pool.

**(2)**

depth = ..... m

(ii) Figure 2 shows part of the side and base of the pool.

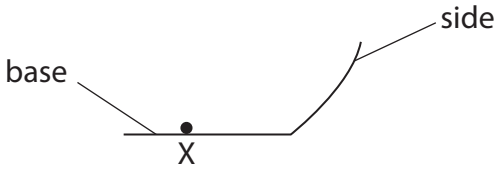


**Figure 2**

The water in the pool causes a force on the base of the pool.

Draw an arrow on Figure 2 to show the direction of this force at point X.

**(1)**

DO NOT WRITE IN THIS AREA
DO NOT WRITE IN THIS AREA
DO NOT WRITE IN THIS AREA

(b) A smaller pool has the same depth of water but has only half the area in contact with the ground.

The pressure on the ground underneath the smaller pool is

**(1)**

☒ **A** twice the pressure underneath the larger pool

☒ **B** ten times the pressure underneath the larger pool

☒ **C** half the pressure underneath the larger pool

☒ **D** the same as the pressure underneath the larger pool

(c) A small hole is made in the base of the large pool shown in Figure 1.

The area of the hole is 1.5 $mm^2$. The pressure at the base of the pool due to the water is 3500 Pa.

Calculate the force on the ground directly below the hole due to the water in the pool.

Use the equation

$$P = \frac{F}{A}$$

**(2)**

force = ..... N

(d) A bigger hole is made in the base of the same pool.

Compare the force on the ground directly below the bigger hole with the force on the ground directly below the original hole.

**(1)**

.....

.....

**(Total for Question 1 = 7 marks)**

DO NOT WRITE IN THIS AREA
DO NOT WRITE IN THIS AREA
DO NOT WRITE IN THIS AREA

**2** (a) A student places a trolley at the top of a runway, as shown in Figure 3.

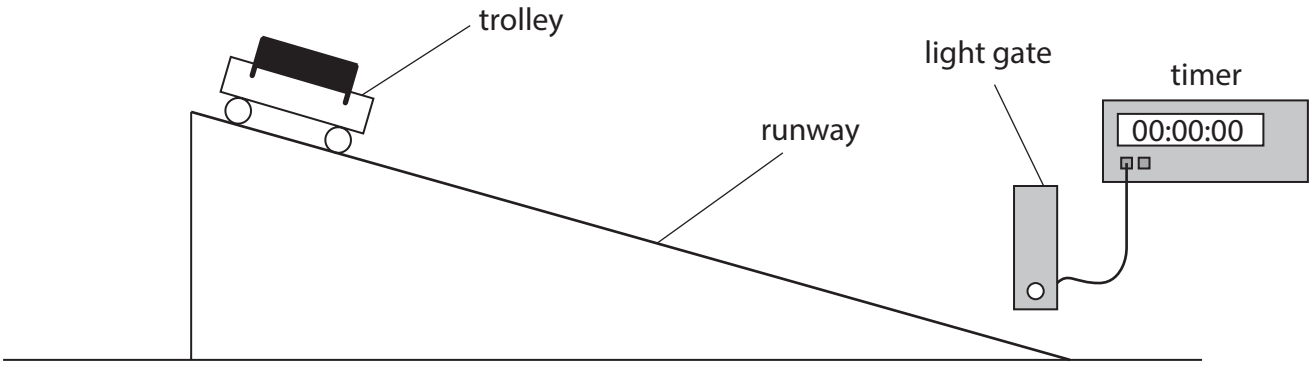


**Figure 3**

The student had to lift the trolley through a height of 26 cm to put it at the top of the runway.

The gravitational potential energy, $\Delta GPE$, of the trolley increases by 4.1 J when lifted to the top of the runway.

The gravitational field strength, $g$, = 10 N / kg.

(i) Show that the mass of the trolley is about 1.6 kg.

Use the equation

$$m = \frac{\Delta GPE}{g \times \Delta h}$$

**(2)**

DO NOT WRITE IN THIS AREA
DO NOT WRITE IN THIS AREA
DO NOT WRITE IN THIS AREA

(ii) The student releases the trolley and the trolley moves down the runway.

The student assumes that all the extra gravitational potential energy, $\Delta GPE$, stored at the top of the runway is transferred to kinetic energy at the end of the runway.

Calculate the expected value of the velocity of the trolley at the end of the runway.

Use the equation

$$v^2 = \frac{2 \times \Delta GPE}{m}$$

**(3)**

expected velocity = ..... m / s

(iii) The light gate, shown in Figure 3, is used to determine the actual velocity of the trolley at the end of the runway.

The actual velocity at the end of the runway is less than the expected velocity as calculated in (ii).

Suggest **one** way to reduce the difference between the actual velocity and the expected velocity.

**(1)**

.....

.....

DO NOT WRITE IN THIS AREA
DO NOT WRITE IN THIS AREA
DO NOT WRITE IN THIS AREA

(b) A different student finds out how much power can be generated by running up some stairs in a measured amount of time.

The following quantities are measured:

mass of student = 48 kg

total height of stairs = 2.9 m

time to run up stairs = 3.4 s

Calculate the power the student generated.

Give the answer to 2 significant figures (2 s.f.).

Use the equation

$$\text{power} = \frac{\text{weight of student} \times \text{height of stairs}}{\text{time to run up stairs}}$$

**(3)**

power = ..... W

**(Total for Question 2 = 9 marks)**

DO NOT WRITE IN THIS AREA
DO NOT WRITE IN THIS AREA
DO NOT WRITE IN THIS AREA

DO NOT WRITE IN THIS AREA
DO NOT WRITE IN THIS AREA
DO NOT WRITE IN THIS AREA

**3** (a) State the frequency of the supply of electricity to homes in the UK (United Kingdom).

**(1)**

frequency = ..... Hz

(b) The mains supply to the television is 230 V.

The current supplied to the television is 0.53 A.

Calculate the power input to the television.

Use the equation

$$P = I \times V$$

**(2)**

power = ..... W

(c) A plug connects a television to the mains supply.

(i) The plug contains a fuse that is connected to the

**(1)**

☒ **A** live pin

☒ **B** negative pin

☒ **C** neutral pin

☒ **D** positive pin

(ii) A 3 A fuse is used in the plug.

Explain what happens if a fault causes the current to rise to more than 3 A.

**(2)**

.....

.....

.....

.....

(iii) A fuse is a safety device.

State **one** other safety device that can be used in domestic electrical wiring.

**(1)**

.....

.....

DO NOT WRITE IN THIS AREA DO NOT WRITE IN THIS AREA DO NOT WRITE IN THIS AREA

(d) Figure 4 shows two pieces of electrical cable side by side.

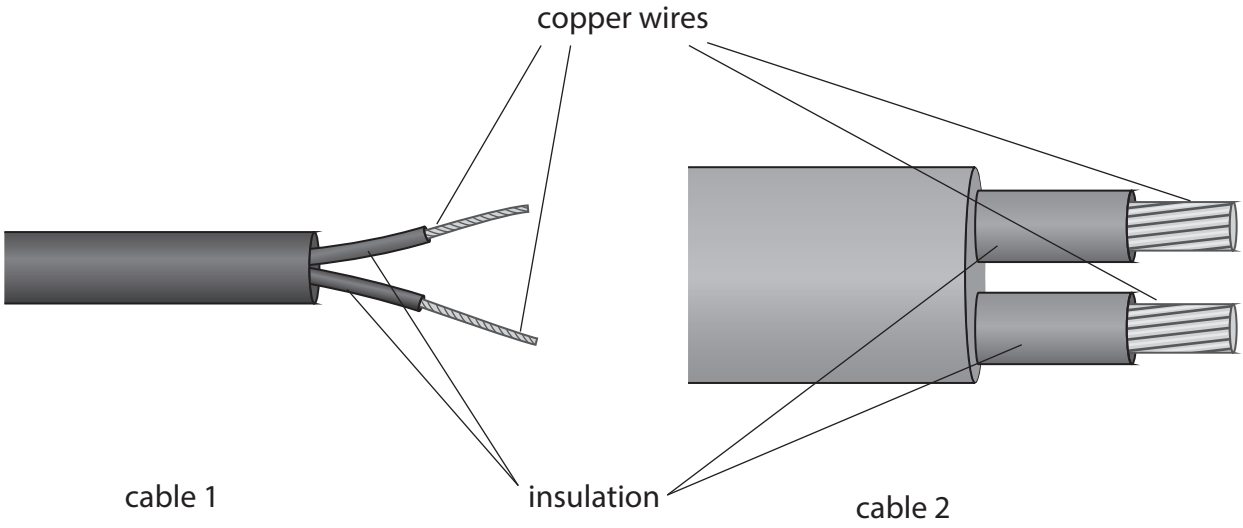


**Figure 4**

Cable 1 is used to supply electric current to the television.

Cable 2 is used to supply electric current to the house.

Explain why cable 2 is more suitable than cable 1 for supplying electric current to the house.

**(2)**

.....

.....

.....

.....

**(Total for Question 3 = 9 marks)**

DO NOT WRITE IN THIS AREA
DO NOT WRITE IN THIS AREA
DO NOT WRITE IN THIS AREA

**4** (a) Figure 5 shows **two** metal plates.

The plates are charged by a very high voltage (potential difference).

Draw, on Figure 5, the shape and direction of the electric field between the two plates.

**(2)**

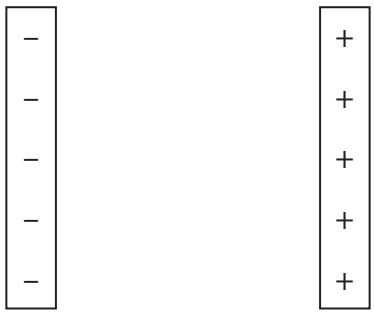


**Figure 5**

(b) Figure 6 shows a device that removes small particles of soot from sooty air.

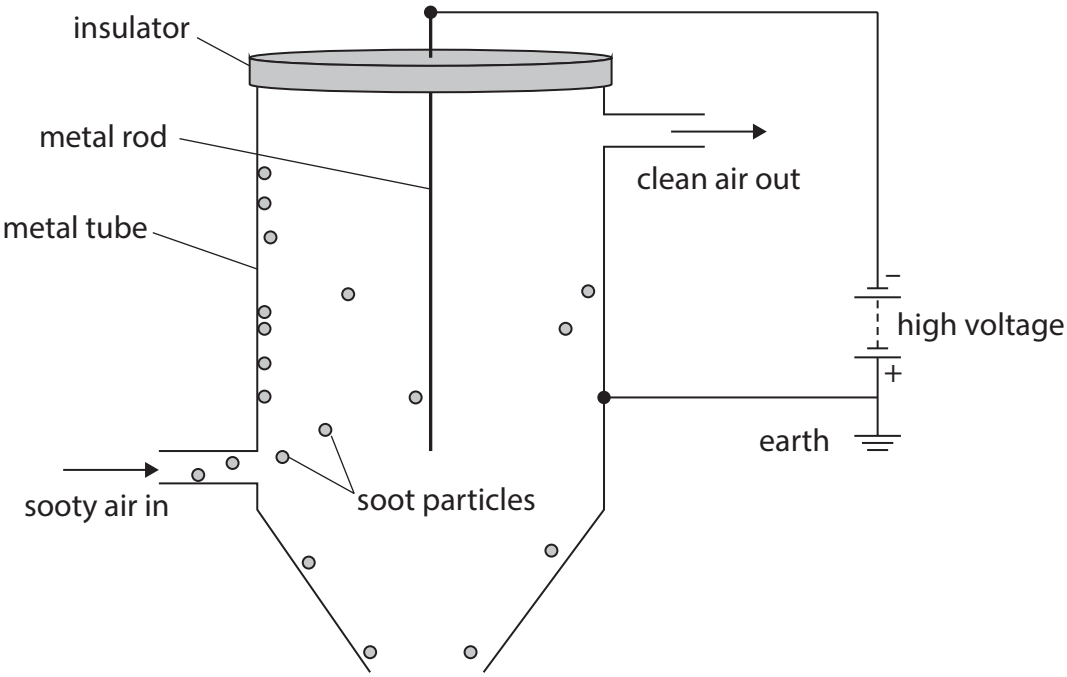


**Figure 6**

DO NOT WRITE IN THIS AREA
DO NOT WRITE IN THIS AREA
DO NOT WRITE IN THIS AREA

(i) There is a large potential difference between the metal tube and the metal rod in the centre of the tube.

This large potential difference causes the soot particles to gain a negative charge as they pass between the rod and the tube.

The soot particles have

**(1)**

☒ **A** lost protons

☒ **B** lost electrons

☒ **C** gained protons

☒ **D** gained electrons

(ii) Explain why, in Figure 6, the charged soot particles move towards the metal tube.

**(2)**

.....

.....

.....

.....

(iii) When the soot particles reach the metal tube, the charge on them changes.

State how the charge on them changes.

**(1)**

.....

.....

(iv) The metal tube does not become charged when the soot particles reach it.

Explain why the metal tube does not become charged.

**(2)**

.....

.....

.....

.....

DO NOT WRITE IN THIS AREA
DO NOT WRITE IN THIS AREA
DO NOT WRITE IN THIS AREA

(c) There is a current of 2.5 mA in a circuit.

Calculate the amount of charge that moves past a point in the circuit in 80 seconds.

State the unit of charge.

**(3)**

charge = ..... unit .....

**(Total for Question 4 = 11 marks)**

DO NOT WRITE IN THIS AREA
DO NOT WRITE IN THIS AREA
DO NOT WRITE IN THIS AREA

**5** A teacher heats a block of wax until all the wax melts.

The teacher pours the melted wax into a container and allows the wax to cool.

Figure 7 shows how the temperature of the wax changes during a time of 20 minutes.

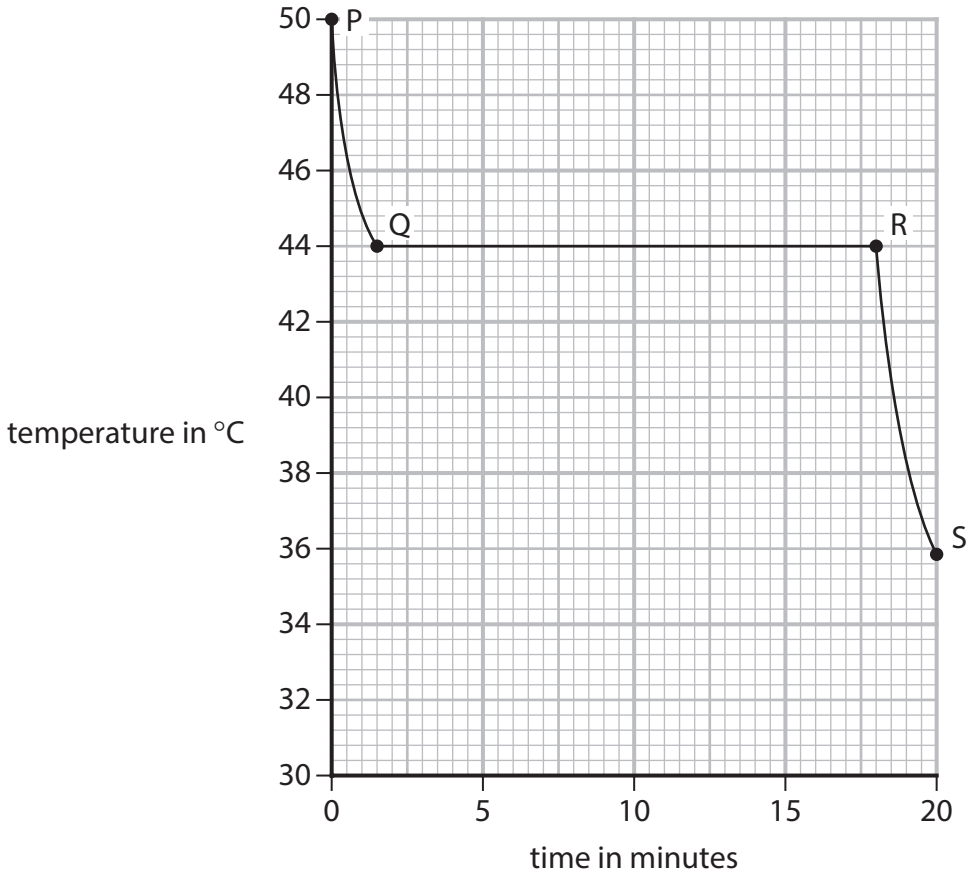


**Figure 7**

Four different points on the graph are labelled P, Q, R and S.

(a) Between which two points is **all** the wax liquid?

**(1)**

☒ **A** P and Q

☒ **B** P and R

☒ **C** Q and S

☒ **D** R and S



DO NOT WRITE IN THIS AREA
DO NOT WRITE IN THIS AREA
DO NOT WRITE IN THIS AREA

(b) Describe the change in the motion of the wax particles as the wax changes from liquid to solid.

**(2)**

.....

.....

.....

.....

(c) Figure 8 shows the values of some properties of the wax.

| **property** | **value** |
|---|---|
| density when solid | 930 kg / m$^3$ |
| density when liquid | 830 kg / m$^3$ |
| specific latent heat | 190 kJ / kg |
| specific heat capacity of solid wax | 2.1 kJ / kg °C |

**Figure 8**

(i) The wax has a mass of 3.9 kg.

Using information from Figure 8, calculate the volume of the wax when it is all liquid.

Use the equation

$$\rho = \frac{m}{V}$$

**(2)**

volume = ..... m$^3$

DO NOT WRITE IN THIS AREA
DO NOT WRITE IN THIS AREA
DO NOT WRITE IN THIS AREA

(ii) State, using information from Figure 8, how the volume of the wax changes when it becomes a solid.

**(1)**

.....

.....

(iii) Explain why, using Figure 8, the time from R to S is much shorter than the time from Q to R on the graph in Figure 7.

**(3)**

.....

.....

.....

.....

.....

.....

**(Total for Question 5 = 9 marks)**

DO NOT WRITE IN THIS AREA
DO NOT WRITE IN THIS AREA
DO NOT WRITE IN THIS AREA

**6** The battery inside an electric toothbrush is recharged when the toothbrush is placed on its charger.

Figure 9 shows part of the toothbrush and the charger.

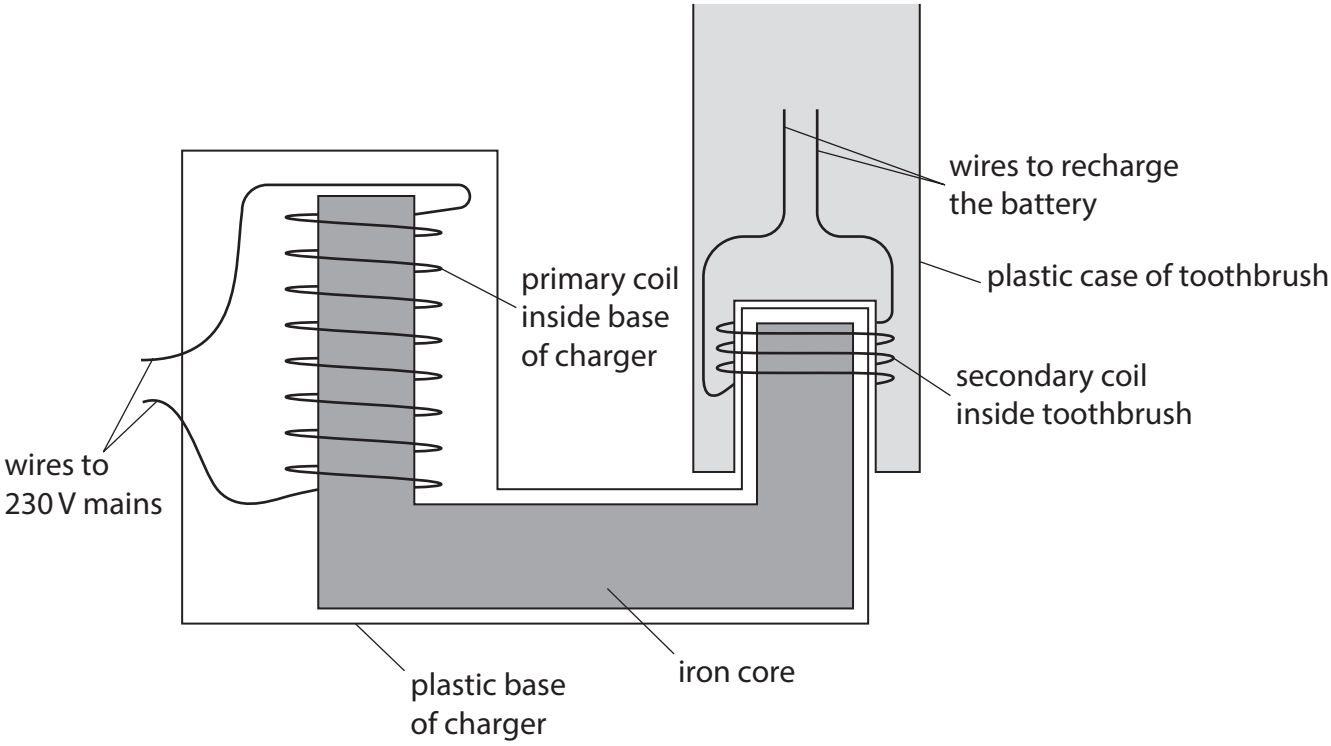


**Figure 9**

(a) (i) Explain how the current is produced in the secondary coil of the transformer in Figure 9.

**(3)**

.....

.....

.....

.....

.....

.....

DO NOT WRITE IN THIS AREA
DO NOT WRITE IN THIS AREA
DO NOT WRITE IN THIS AREA

(ii) The potential difference across the primary coil is 230 V.

The potential difference across the secondary coil is 1.5 V.

The primary coil has 1840 turns of wire.

Calculate the number of turns of wire in the secondary coil.

**(2)**

number of turns = .....

(b) In Figure 9, a diode is connected in series with the rechargeable battery.

Explain why a diode is needed in the toothbrush in this part of the circuit.

**(2)**

.....

.....

.....

.....

DO NOT WRITE IN THIS AREA
DO NOT WRITE IN THIS AREA
DO NOT WRITE IN THIS AREA

(c) Figure 10 shows a simplified diagram of the split ring commutator in a d.c. electric motor.

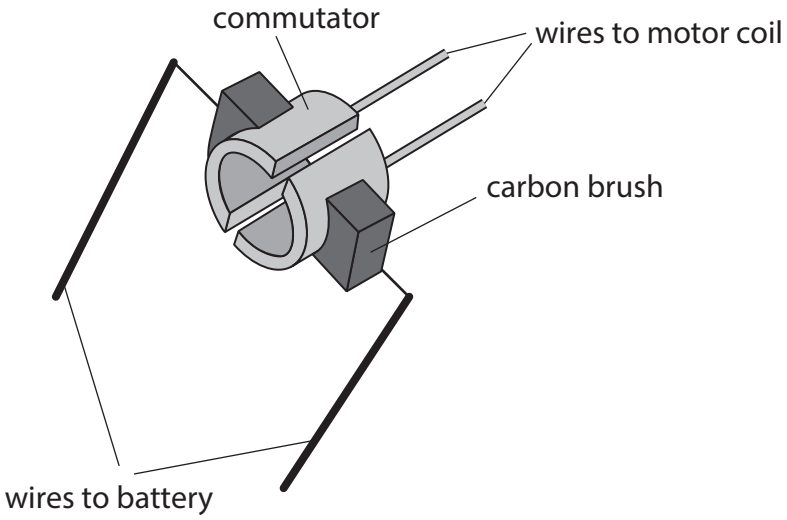


(Source: gsu.edu)

**Figure 10**

Explain the function of the commutator in a d.c. electric motor.

**(3)**

.....

.....

.....

.....

.....

.....

**(Total for Question 6 = 10 marks)**

DO NOT WRITE IN THIS AREA
DO NOT WRITE IN THIS AREA
DO NOT WRITE IN THIS AREA

DO NOT WRITE IN THIS AREA
DO NOT WRITE IN THIS AREA
DO NOT WRITE IN THIS AREA

**7** (a) Figure 11 shows two nails, X and Y, hanging from a magnet.

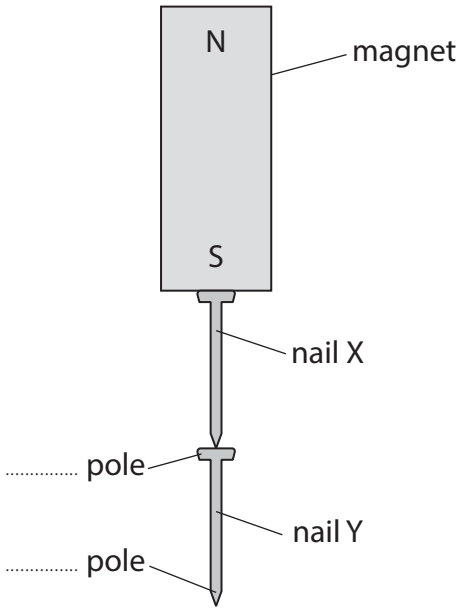


**Figure 11**

(i) Complete the labels in Figure 11 to show the N and S poles of nail Y.

**(1)**

(ii) Nail X is removed from the magnet and nail Y falls off nail X.

This shows that the magnet caused both nails to be

**(1)**

☒ **A** permanent magnets

☒ **B** temporarily charged

☒ **C** permanently charged

☒ **D** induced magnets

(b) A teacher has a pile of steel nails, a magnet and some plastic strips that are all the same size.

The teacher places a plastic strip under the magnet and picks up some nails from the pile, as shown in Figure 12.

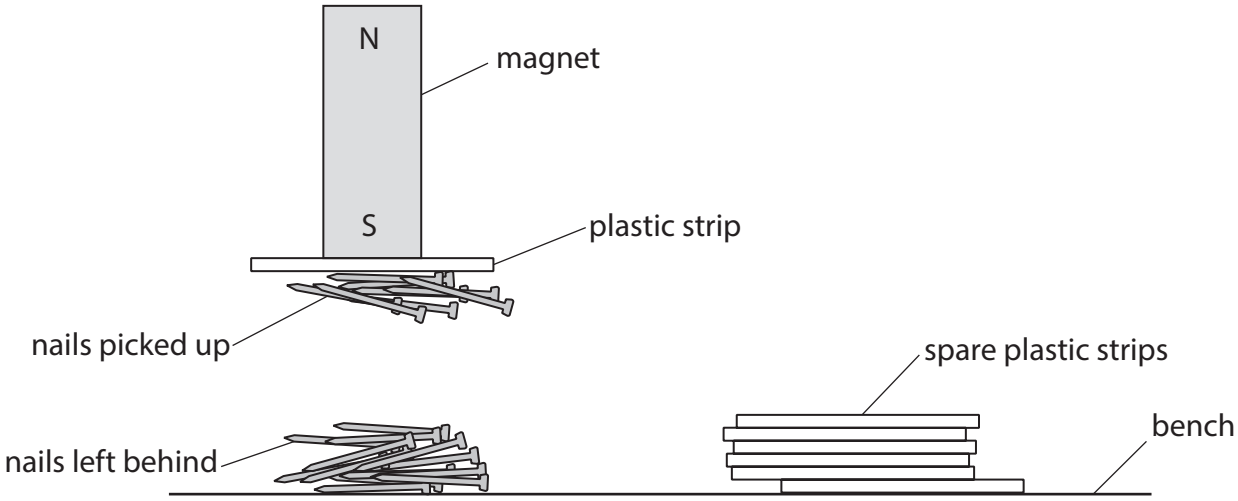


**Figure 12**

Some nails are not picked up and are left behind on the bench.

The teacher investigates how the number of nails that can be picked up changes when the number of plastic strips under the magnet is increased.

The results are shown in Figure 13.

| | number of nails picked up | | | | |
|---|---|---|---|---|---|
| **number of plastic strips** | **1st trial** | **2nd trial** | **3rd trial** | **4th trial** | **mean** |
| 1 | 12 | 13 | 12 | 13 | 12.5 |
| 2 | 11 | ..... | 12 | 12 | 12.0 |
| 3 | 10 | 12 | 11 | 12 | 11.25 |
| 4 | 7 | 9 | 8 | 12 | 9.0 |
| 5 | 6 | 6 | 8 | 7 | 6.75 |
| 6 | 3 | 5 | 4 | 6 | 4.5 |
| 7 | 1 | 2 | 3 | 2 | 2.0 |

**Figure 13**

(i) Complete Figure 13 to show the missing value.

**(1)**

DO NOT WRITE IN THIS AREA
DO NOT WRITE IN THIS AREA
DO NOT WRITE IN THIS AREA

(ii) Use the data in Figure 13 to complete the bar chart in Figure 14.

**(1)**

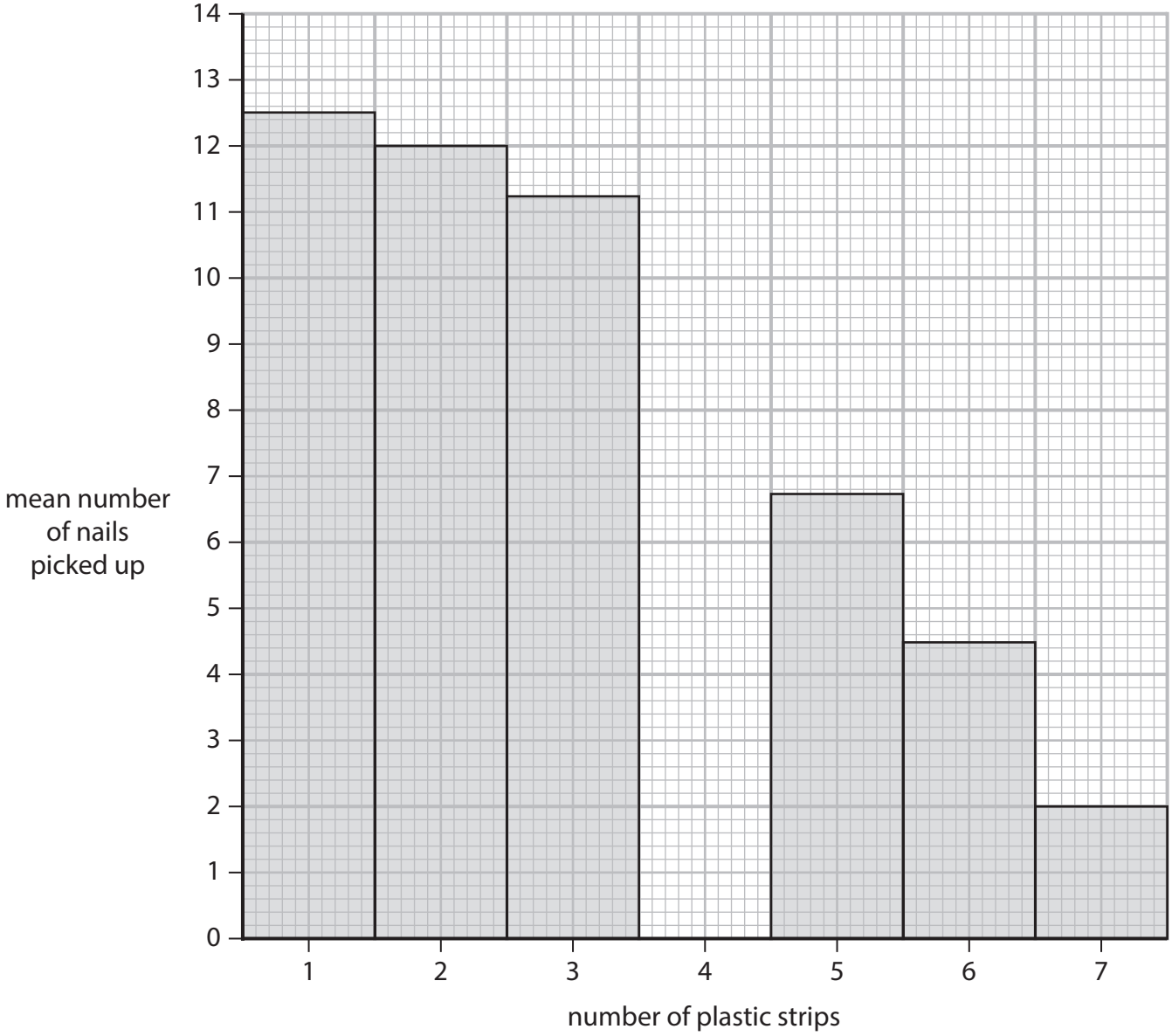


**Figure 14**

(iii) Use Figure 14 to describe the relationship between the number of plastic strips and the mean number of nails picked up.

**(2)**

.....

.....

.....

.....

DO NOT WRITE IN THIS AREA
DO NOT WRITE IN THIS AREA
DO NOT WRITE IN THIS AREA

(iv) A student thinks that none of the nails used in the investigation become permanently magnetised.

Suggest how the student could test this hypothesis.

**(2)**

.....

.....

.....

.....

.....

.....

DO NOT WRITE IN THIS AREA DO NOT WRITE IN THIS AREA DO NOT WRITE IN THIS AREA

(c) The magnetic flux density, $B$, is a measure of the strength of the magnetic field of a magnet.

$B$ varies with the distance, $d$, from a magnetic pole of a magnet as given by the equation

$$B \times d^2 = K$$

where $K$ is a constant for the magnet.

At a distance of 3 mm from the pole of a magnet, $B = 650\ \mu T$.

Calculate the value of $B$ at a distance of 6 mm from the pole of the magnet.

**(3)**

$B$ at 6 mm = ..... μT

**(Total for Question 7 = 11 marks)**

DO NOT WRITE IN THIS AREA
DO NOT WRITE IN THIS AREA
DO NOT WRITE IN THIS AREA

**8** (a) A student measures the length of a spring when it is horizontal and when it is vertical, as shown in Figures 15a and 15b.

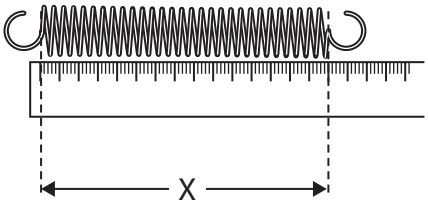


**Figure 15a**

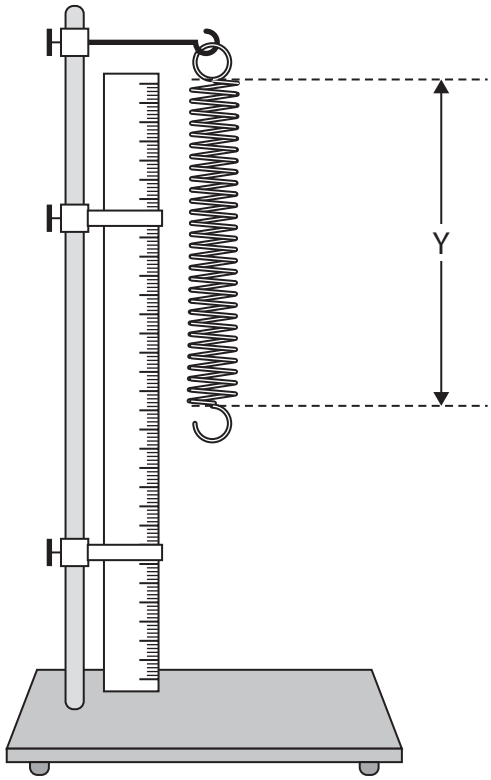


**Figure 15b**

The length, Y, of the vertical spring in Figure 15b is greater than the length, X, of the spring in Figure 15a.

(i) Give a reason why the length of the spring in Figure 15b is greater than the length of the spring in Figure 15a.

**(1)**

.....

.....

DO NOT WRITE IN THIS AREA
DO NOT WRITE IN THIS AREA
DO NOT WRITE IN THIS AREA

(ii) The student adds some weights to the end of the spring, as shown in Figure 16b.

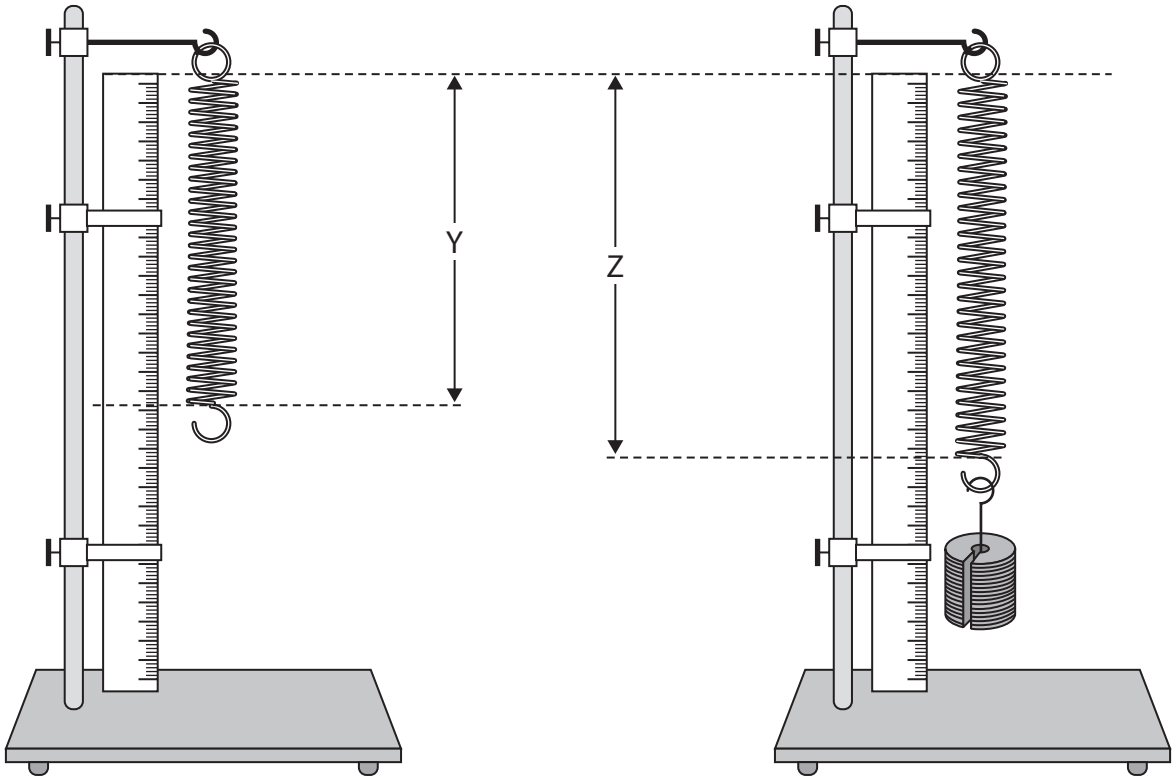


**Figure 16a** **Figure 16b**

(Source: https://www.shalom-education.com/courses/ks3-physics/lessons/motion-and-forces/topic/deformation-and-hookes-law/)

The extension of the spring due to these added weights is equal to

**(1)**

☒ **A** Z – Y

☒ **B** Z + Y

☒ **C** Z

☒ **D** Y

DO NOT WRITE IN THIS AREA
DO NOT WRITE IN THIS AREA
DO NOT WRITE IN THIS AREA

(b) The extension of the spring in Figure 16b is now determined for different weights added to the spring up to a maximum of 6 N.

Figure 17 shows a graph of the results.

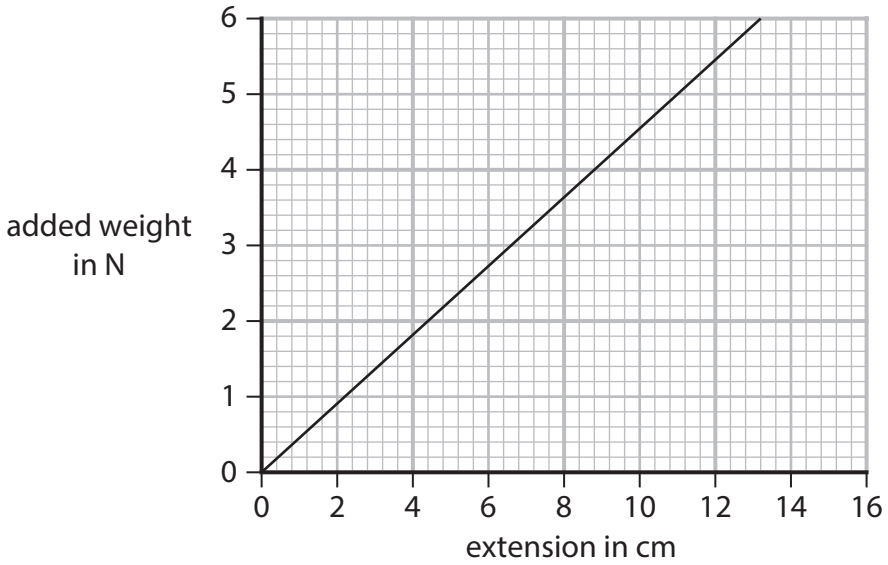


**Figure 17**

(i) The increase in potential energy stored in the spring is equal to the area under the graph in Figure 17.

Calculate the increase in potential energy stored in the spring when the spring is extended from 0 cm to 8 cm.

Give your answer in joules (J).

**(3)**

energy = ..... J

DO NOT WRITE IN THIS AREA
DO NOT WRITE IN THIS AREA
DO NOT WRITE IN THIS AREA

(ii) Calculate the spring constant of the spring using data from the graph in Figure 17.

State the unit.

**(2)**

spring constant = ..... unit .....

DO NOT WRITE IN THIS AREA
DO NOT WRITE IN THIS AREA
DO NOT WRITE IN THIS AREA

(iii) The box in Figure 18 represents a weight added to the end of the spring.

**Figure 18**

Draw **two** vectors on Figure 18 to complete a free body force diagram of a 5 N weight in equilibrium.

**(2)**

DO NOT WRITE IN THIS AREA
DO NOT WRITE IN THIS AREA
DO NOT WRITE IN THIS AREA

(c) Figure 19 shows two forces, P and Q, acting at point X.

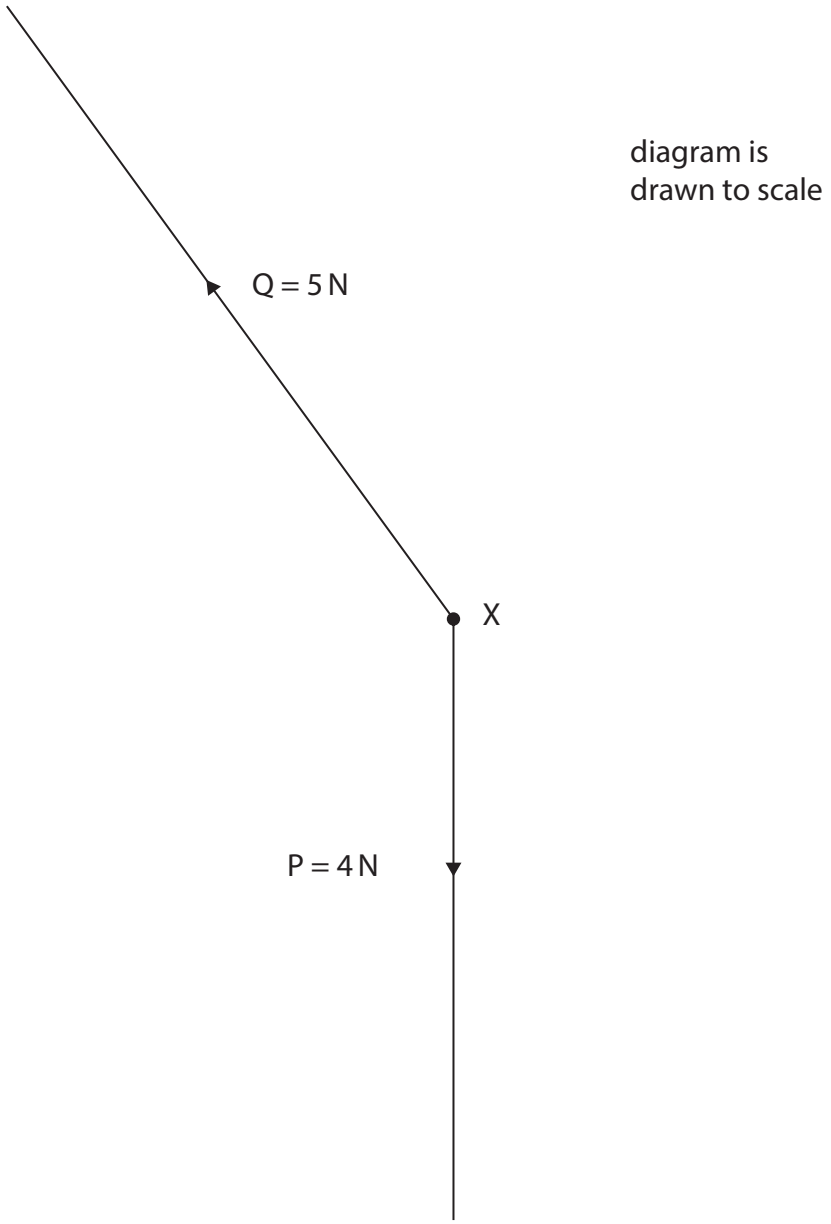


**Figure 19**

Complete the diagram in Figure 19 to show the size and direction of the resultant force, R, on point X.

**(2)**

**(Total for Question 8 = 11 marks)**

DO NOT WRITE IN THIS AREA
DO NOT WRITE IN THIS AREA
DO NOT WRITE IN THIS AREA

**9** (a) Figure 20 shows a metal block being weighed by a newton meter (force meter).

In Figure 20a the block is hanging in a liquid.
In Figure 20b the **same** block is hanging in air.

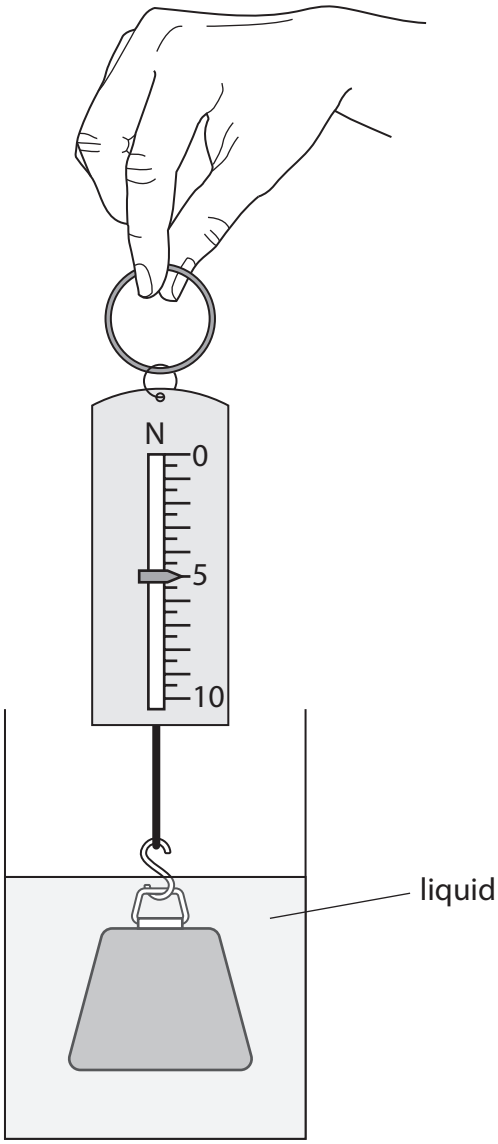


**Figure 20a**

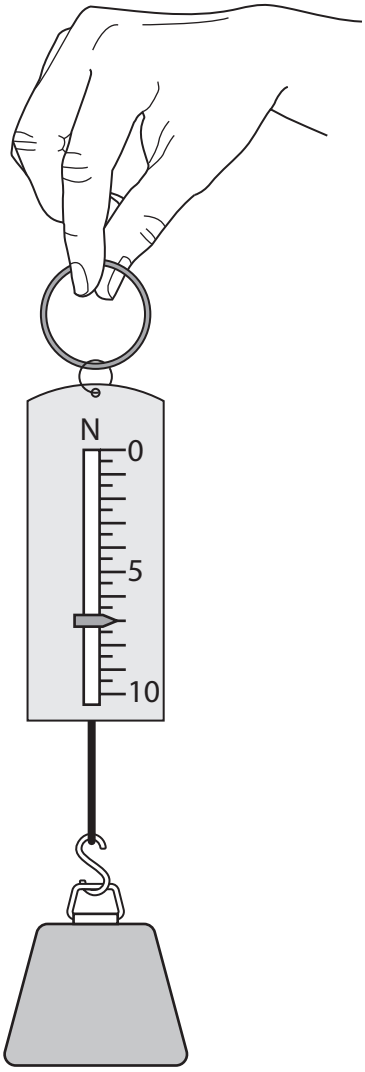


**Figure 20b**

(i) Explain why the reading on the newton meter is different in Figures 20a and 20b.

**(2)**

.....

.....

.....

.....

DO NOT WRITE IN THIS AREA
DO NOT WRITE IN THIS AREA
DO NOT WRITE IN THIS AREA

(ii) The density of the liquid is $1.4 \times 10^3$ kg / m$^3$.

Calculate the density of the block.
Gravitational field strength, $g$, = 10 N / kg

**(4)**

density = ..... kg / m$^3$

DO NOT WRITE IN THIS AREA
DO NOT WRITE IN THIS AREA
DO NOT WRITE IN THIS AREA

*(b) Figure 21 shows a device that a person can use to lift a large load with a smaller effort force.

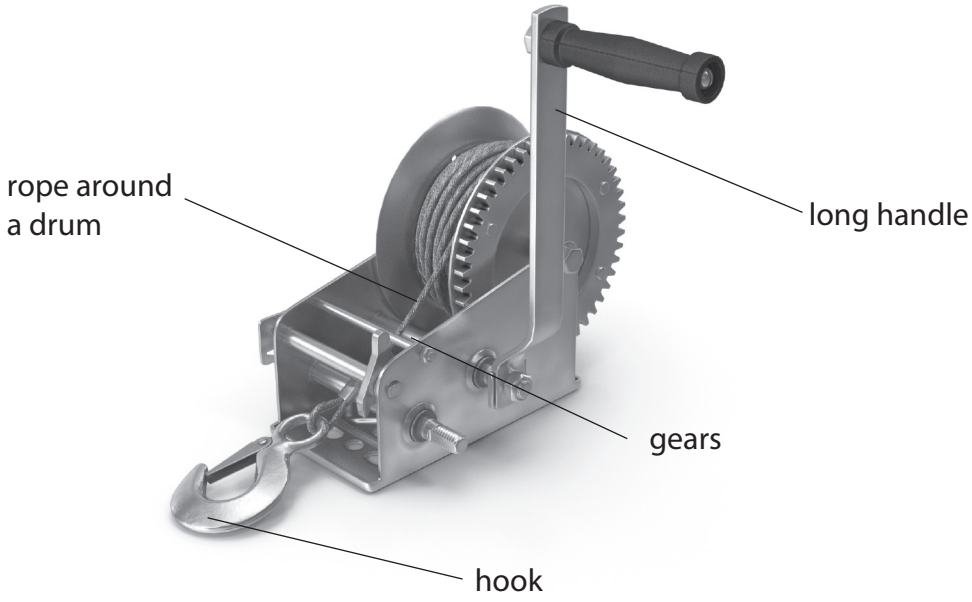


(Source: © Shutterstock-Pixelsquid/Shutterstock)

**Figure 21**

Figure 22 shows the important parts of the device. The curved arrows show the directions of rotation of the handle, the gears and the drum.

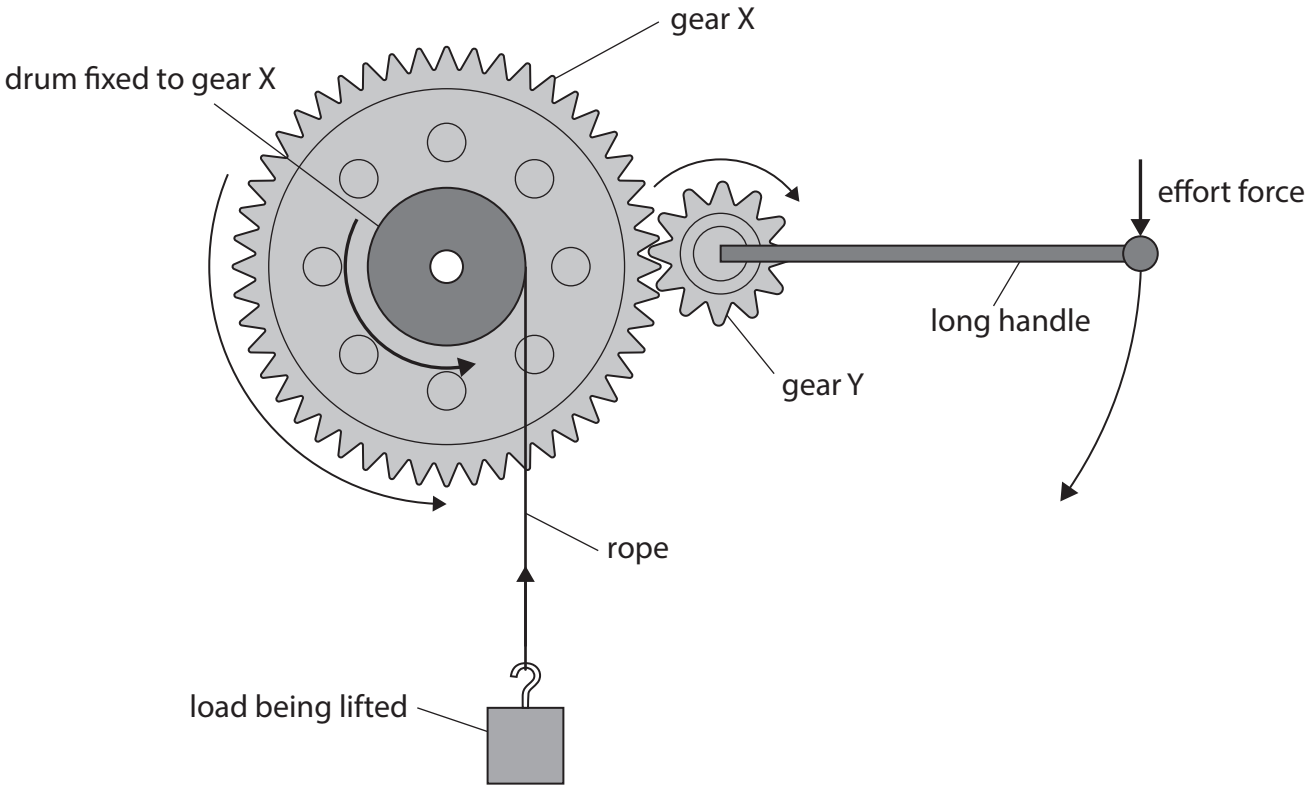


**Figure 22**

DO NOT WRITE IN THIS AREA
DO NOT WRITE IN THIS AREA
DO NOT WRITE IN THIS AREA

The size of the effort force needed to lift the load is determined by the sizes of the parts of the device.

Explain why this is the case.

Your answer should refer to

- the sizes of the different parts of the device
- how these sizes are used in relevant calculations

**(6)**

.....

.....

.....

.....

.....

.....

.....

.....

.....

.....

.....

.....

.....

.....

.....

.....

**(Total for Question 9 = 12 marks)**

DO NOT WRITE IN THIS AREA
DO NOT WRITE IN THIS AREA
DO NOT WRITE IN THIS AREA

**BLANK PAGE**

DO NOT WRITE IN THIS AREA
DO NOT WRITE IN THIS AREA
DO NOT WRITE IN THIS AREA

DO NOT WRITE IN THIS AREA
DO NOT WRITE IN THIS AREA
DO NOT WRITE IN THIS AREA

**10** (a) A student connects a resistor across the terminals of a 9 V battery.

There is a current of 6 mA in the resistor.

(i) Calculate the resistance of the resistor.

**(2)**

resistance = ..... Ω

(ii) Describe how an additional component could be used to vary the current in the resistor.

**(2)**

.....

.....

.....

.....

(b) A voltmeter has four different scales.

Which one of these scales would be most suitable to measure a voltage of 0.85 V?

**(1)**

☒ **A** 0 to 20 mV

☒ **B** 0 to 200 mV

☒ **C** 0 to 2 V

☒ **D** 0 to 20 V

*(c) The table in Figure 23 gives some information about **series** and **parallel** circuits.

| **series** and **parallel** circuits |
|---|
| A battery can be connected to two equal value resistors in **series**. The same battery can be connected to the same two equal value resistors in **parallel**. |
| The current from the battery when the resistors are in **series** is different from the current from the battery when the resistors are in **parallel**. |
| The potential difference across each resistor when the resistors are in **series** will be different from the potential difference across each resistor when the resistors are in **parallel**. |

**Figure 23**

Describe how a student can use ammeters and voltmeters to investigate the information given in Figure 23.

Your answer should include

- circuit diagrams showing how the currents and voltages can be measured
- a comparison of the results that would be expected

**(6)**

**Space for circuit diagrams**

**Answer lines for this question are on page 37.**

DO NOT WRITE IN THIS AREA
DO NOT WRITE IN THIS AREA
DO NOT WRITE IN THIS AREA

DO NOT WRITE IN THIS AREA

DO NOT WRITE IN THIS AREA

DO NOT WRITE IN THIS AREA

**(Total for Question 10 = 11 marks)**

**TOTAL FOR PAPER = 100 MARKS**

**BLANK PAGE**

DO NOT WRITE IN THIS AREA
DO NOT WRITE IN THIS AREA
DO NOT WRITE IN THIS AREA

DO NOT WRITE IN THIS AREA
DO NOT WRITE IN THIS AREA
DO NOT WRITE IN THIS AREA

**BLANK PAGE**

**BLANK PAGE**

DO NOT WRITE IN THIS AREA
DO NOT WRITE IN THIS AREA
DO NOT WRITE IN THIS AREA

# Pearson Edexcel Level 1/Level 2 GCSE (9–1)

## Monday 16 June 2025

Paper reference **1PH0/2H**

# Physics
## PAPER 2

**Higher Tier**

**Equation Booklet**
**Do not return this Booklet with the question paper.**

*Turn over*

P78733RA

©2025 Pearson Education Ltd.
Y:1/1/1/1/1/1/1/1/1/1/1/1/1/

P 7 8 7 3 3 R A

Pearson

If you're taking **GCSE (9–1) Combined Science** or **GCSE (9–1) Physics**, you will need these equations:

**HT** = higher tier

| | | |
|---|---|---|
| | distance travelled = average speed × time | |
| | acceleration = change in velocity ÷ time taken | $a = \frac{(v-u)}{t}$ |
| | force = mass × acceleration | $F = m \times a$ |
| | weight = mass × gravitational field strength | $W = m \times g$ |
| **HT** | **momentum = mass × velocity** | $\boldsymbol{p = m \times v}$ |
| | change in gravitational potential energy = mass × gravitational field strength × change in vertical height | $\Delta GPE = m \times g \times \Delta h$ |
| | kinetic energy = 1/2 × mass × (speed)$^2$ | $KE = \frac{1}{2} \times m \times v^2$ |
| | efficiency = $\frac{(\text{useful energy transferred by the device})}{(\text{total energy supplied to the device})}$ | |
| | wave speed = frequency × wavelength | $v = f \times \lambda$ |
| | wave speed = distance ÷ time | $v = \frac{x}{t}$ |
| | work done = force × distance moved in the direction of the force | $E = F \times d$ |
| | power = work done ÷ time taken | $P = \frac{E}{t}$ |
| | energy transferred = charge moved × potential difference | $E = Q \times V$ |
| | charge = current × time | $Q = I \times t$ |
| | potential difference = current × resistance | $V = I \times R$ |
| | power = energy transferred ÷ time taken | $P = \frac{E}{t}$ |
| | electrical power = current × potential difference | $P = I \times V$ |
| | electrical power = (current)$^2$ × resistance | $P = I^2 \times R$ |
| | density = mass ÷ volume | $\rho = \frac{m}{V}$ |

| | | |
|---|---|---|
| | force exerted on a spring = spring constant × extension | $F = k \times x$ |
| | (final velocity)$^2$ – (initial velocity)$^2$ = 2 × acceleration × distance | $v^2 - u^2 = 2 \times a \times x$ |
| **HT** | **force = change in momentum ÷ time** | $\boldsymbol{F = \frac{(mv - mu)}{t}}$ |
| | energy transferred = current × potential difference × time | $E = I \times V \times t$ |
| **HT** | **force on a conductor at right angles to a magnetic field carrying a current = magnetic flux density × current × length** | $\boldsymbol{F = B \times I \times l}$ |
| | For transformers with 100% efficiency, potential difference across primary coil × current in primary coil = potential difference across secondary coil × current in secondary coil | $V_P \times I_P = V_S \times I_S$ |
| | change in thermal energy = mass × specific heat capacity × change in temperature | $\Delta Q = m \times c \times \Delta\theta$ |
| | thermal energy for a change of state = mass × specific latent heat | $Q = m \times L$ |
| | energy transferred in stretching = 0.5 × spring constant × (extension)$^2$ | $E = \frac{1}{2} \times k \times x^2$ |

If you're taking **GCSE (9–1) Physics**, you also need these extra equations:

| | | |
|---|---|---|
| | moment of a force = force × distance normal to the direction of the force | |
| | pressure = force normal to surface ÷ area of surface | $P = \frac{F}{A}$ |
| **HT** | $\frac{\textit{potential difference across primary coil}}{\textit{potential difference across secondary coil}} = \frac{\textit{number of turns in primary coil}}{\textit{number of turns in secondary coil}}$ | $\boldsymbol{\frac{V_p}{V_S} = \frac{N_p}{N_S}}$ |
| | to calculate pressure or volume for gases of fixed mass at constant temperature | $P_1 \times V_1 = P_2 \times V_2$ |
| **HT** | **pressure due to a column of liquid = height of column × density of liquid × gravitational field strength** | $\boldsymbol{P = h \times \rho \times g}$ |

**END OF EQUATION LIST**

**BLANK PAGE**