Please check the examination details below before entering your candidate information

Candidate surname	Other names

Centre Number | Candidate Number

Pearson Edexcel Level 1/Level 2 GCSE (9–1)

Friday 16 June 2023

Morning (Time: 1 hour 45 minutes)

Paper reference **1PH0/2H**

Physics

PAPER 2

Higher Tier

You must have:
Calculator, ruler, Equation Booklet (enclosed)

Total Marks

Instructions

- Use **black** ink or ball-point pen.
- **Fill in the boxes** at the top of this page with your name, centre number and candidate number.
- Answer **all** questions.
- Answer the questions in the spaces provided – *there may be more space than you need.*
- Calculators may be used.
- Any diagrams may NOT be accurately drawn, unless otherwise indicated.
- You must **show all your working out** with **your answer clearly identified** at the **end of your solution**.

Information

- The total mark for this paper is 100.
- The marks for **each** question are shown in brackets – *use this as a guide as to how much time to spend on each question.*
- In questions marked with an **asterisk** (*), marks will be awarded for your ability to structure your answer logically, showing how the points that you make are related or follow on from each other where appropriate.
- A list of equations is included at the end of this exam paper.

Advice

- Read each question carefully before you start to answer it.
- Try to answer every question.
- Check your answers if you have time at the end.

Turn over

©2023 Pearson Education Ltd.
N:1/1/1/1/1/1/

P 7 2 5 7 5 A 0 1 3 6

Pearson

Answer ALL questions. Write your answers in the spaces provided.

Some questions must be answered with a cross in a box ☒. If you change your mind about an answer, put a line through the box ☒ and then mark your new answer with a cross ☒.

1 (a) Figure 1 shows a prize that is made from a metal star on a plastic base.

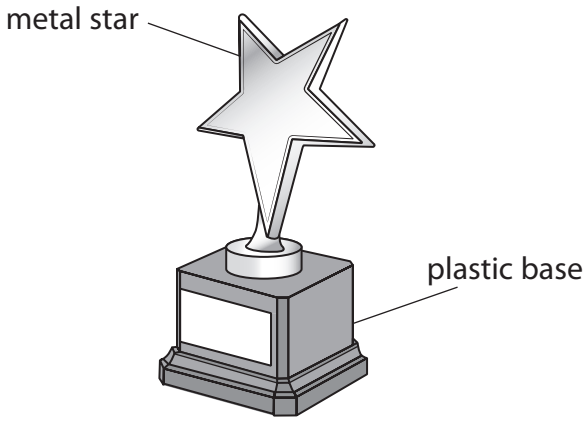

Figure 1

A person starts to clean the prize by rubbing the plastic base with a dry cloth.

The plastic base becomes positively charged and the cloth becomes negatively charged.

(i) The plastic base has

(1)

☒ **A** gained electrons

☒ **B** gained protons

☒ **C** lost electrons

☒ **D** lost protons

(ii) Explain why the cloth has become negatively charged.

(2)

.....

.....

.....

.....

DO NOT WRITE IN THIS AREA
DO NOT WRITE IN THIS AREA
DO NOT WRITE IN THIS AREA

(b) The person then holds the metal star and rubs it with the charged cloth.

The cloth loses its charge.

Explain why the cloth loses its charge.

(2)

.....

.....

.....

.....

(c) The charged plastic base attracts some dust from the air.

Figure 2 shows a magnified view of part of the surface of the plastic base and a dust particle.

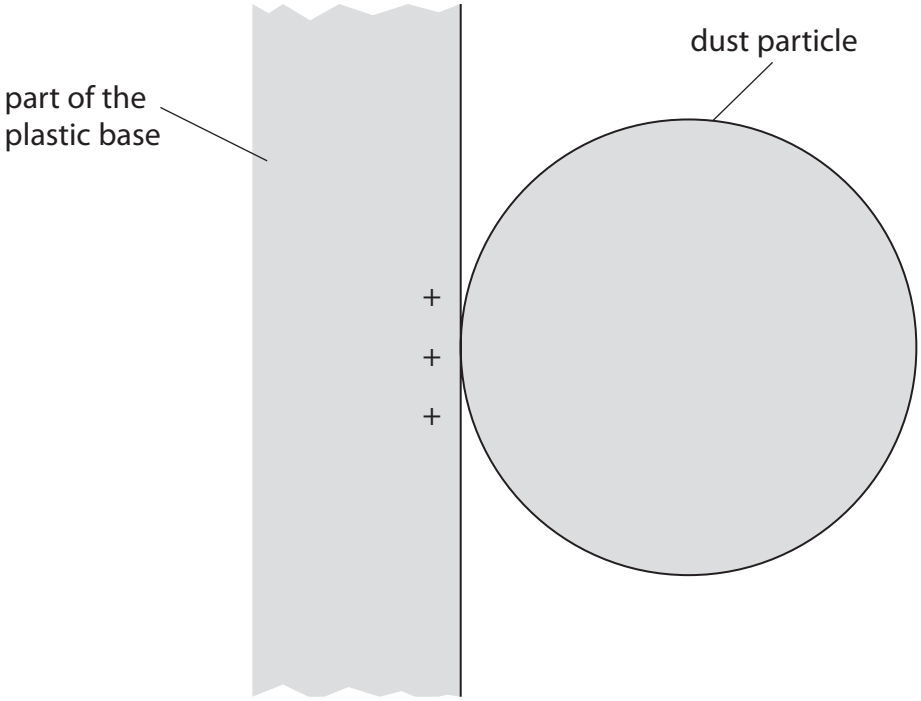

Figure 2

Some of the charges on the plastic base are shown but the charges induced on the dust particle are not shown.

Draw the charges induced on the dust particle in Figure 2.

(2)

(Total for Question 1 = 7 marks)

DO NOT WRITE IN THIS AREA
DO NOT WRITE IN THIS AREA
DO NOT WRITE IN THIS AREA

2 (a) Figure 3 shows some of the apparatus that students use to determine the resistance of a piece of iron wire.

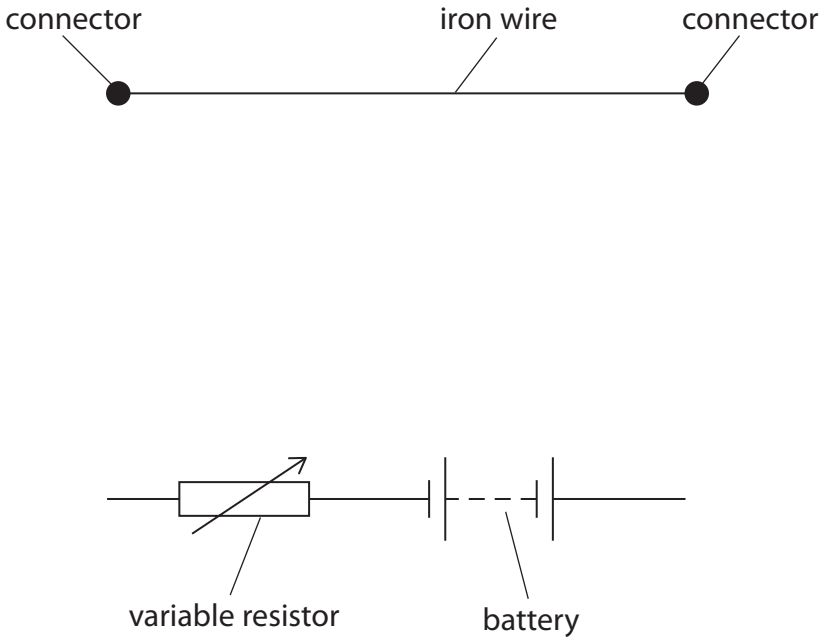

Figure 3

Add connecting wires, a voltmeter and an ammeter to complete the circuit in Figure 3 so that the students can determine the resistance of the piece of iron wire.

(2)

(b) The students extend the investigation to determine how the resistance of the iron wire changes with its length.

(i) Give the name of **one** additional piece of apparatus the students would need.

(1)

.....

DO NOT WRITE IN THIS AREA
DO NOT WRITE IN THIS AREA
DO NOT WRITE IN THIS AREA

(ii) Figure 4 shows a graph of the results.

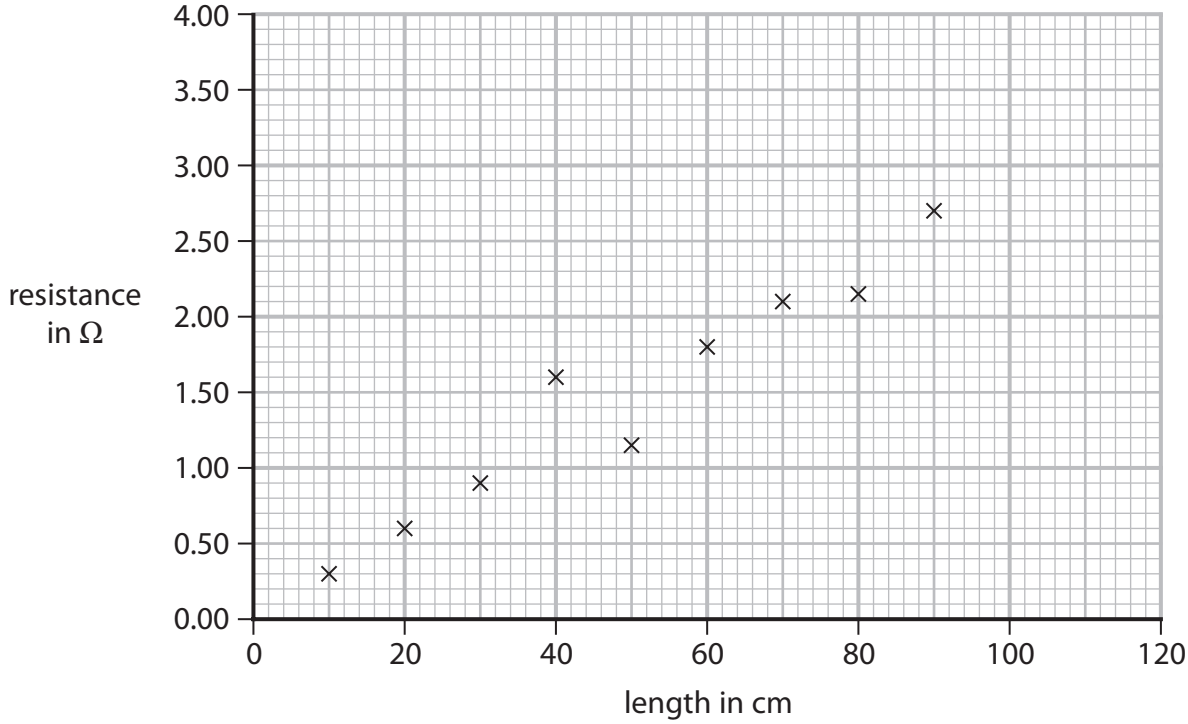

Figure 4

Draw a straight line of best fit on Figure 4.

(1)

(iii) Use Figure 4 to estimate the resistance of a 100 cm length of the iron wire.

(1)

resistance = ... Ω

(iv) The variable resistor shown in Figure 3 is used to prevent the iron wire from becoming too hot.

Explain how the variable resistor is used to prevent the iron wire from becoming too hot.

(2)

.....

.....

.....

.....

DO NOT WRITE IN THIS AREA
DO NOT WRITE IN THIS AREA
DO NOT WRITE IN THIS AREA

(c) The potential difference (voltage) across another piece of wire is 1.56 *V*.

The current in the wire is 0.45 *A*.

Calculate the resistance of this piece of wire.

Use the equation

$$V = I \times R$$

(2)

resistance = ... Ω

(Total for Question 2 = 9 marks)

DO NOT WRITE IN THIS AREA
DO NOT WRITE IN THIS AREA
DO NOT WRITE IN THIS AREA

DO NOT WRITE IN THIS AREA
DO NOT WRITE IN THIS AREA
DO NOT WRITE IN THIS AREA

3 (a) Which of these means changing state from solid directly to gas?

(1)

☒ **A** condensing

☒ **B** freezing

☒ **C** melting

☒ **D** sublimating

(b) An object has a mass of 7.22×10^{-2} kg and a volume of 2.69×10^{-5} m^3.

Calculate the density, ρ, of the object.

Use the equation

$$\rho = \frac{m}{V}$$

(3)

State the unit.

density = ... unit .....

(c) Aluminium has a melting point of 660 °C.

The absolute zero of temperature is –273 °C.

(i) Calculate the melting point of aluminium in kelvin.

(1)

melting point of aluminium = ... K

(ii) Describe the motion of particles in liquid aluminium (above 660 °C).

(2)

.....

.....

.....

(d) A student determines the volume of a piece of metal by measuring the volume of water that it displaces.

The student wrote the following in his notebook.

> I put some water into a measuring cylinder.
> I put the piece of metal into the water in the measuring cylinder.
> I took the reading of the new water level in the measuring cylinder.
> This was the volume of the piece of metal.

The student's description is incomplete.

Suggest **two** sentences that the student could have included to provide a more complete description of the correct procedure.

(2)

1 .....

.....

2 .....

.....

(Total for Question 3 = 9 marks)

DO NOT WRITE IN THIS AREA
DO NOT WRITE IN THIS AREA
DO NOT WRITE IN THIS AREA

DO NOT WRITE IN THIS AREA
DO NOT WRITE IN THIS AREA
DO NOT WRITE IN THIS AREA

BLANK PAGE

4 This question is about pressure.

(a) Figure 5 shows windows in an aeroplane.

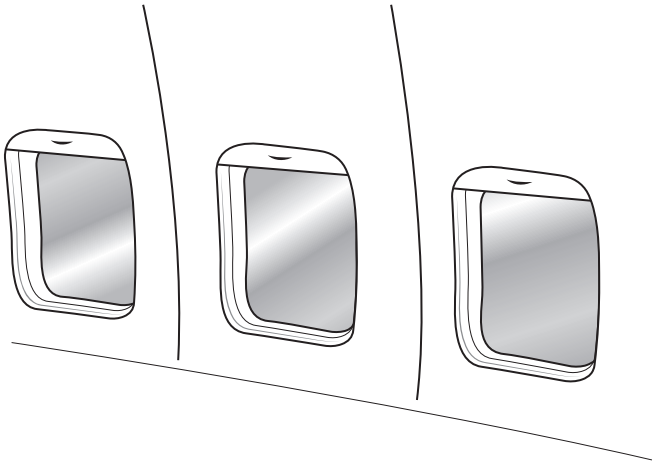

Figure 5

The aeroplane is high above the Earth's surface.

The atmospheric pressure outside the aeroplane is 23 000 Pa.

The air pressure inside the aeroplane is 80 000 Pa.

(i) Calculate the pressure difference between inside and outside of the aeroplane.

(1)

pressure difference = ... Pa

(ii) The surface area of the window is 0.094 m^2.

Calculate the size of the force on the window due to the cabin air pressure of 80 000 Pa.

Use the equation

$$P = \frac{F}{A}$$

(2)

force = ... N

DO NOT WRITE IN THIS AREA
DO NOT WRITE IN THIS AREA
DO NOT WRITE IN THIS AREA

(iii) On the same aeroplane, a different window has a smaller surface area.

Explain how the force due to the air pressure inside the cabin on the small window differs from the force on the larger window.

(2)

.....

.....

.....

.....

(iv) Figure 6 shows a cross-section through the aeroplane including one window.

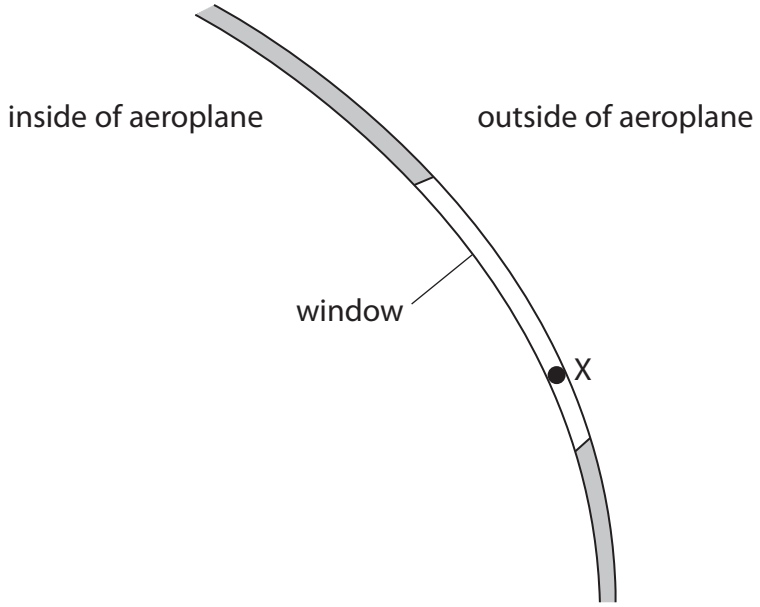

Figure 6

Draw an arrow on Figure 6 to show the direction of the resultant force due to the air pressure inside the cabin on the window at point X.

(2)

DO NOT WRITE IN THIS AREA
DO NOT WRITE IN THIS AREA
DO NOT WRITE IN THIS AREA

(b) Figure 7 shows the atmospheric pressure at different heights above the Earth's surface.

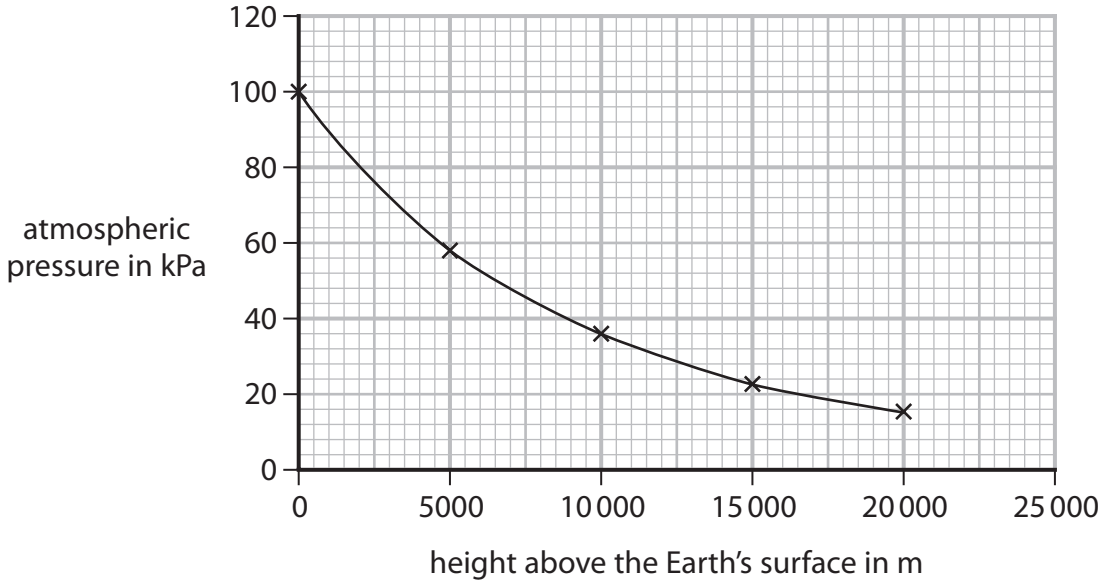

Figure 7

(i) Describe how the atmospheric pressure changes with height above the Earth's surface.

Use data from Figure 7 to support your answer.

(3)

.....

.....

.....

.....

.....

.....

(ii) Suggest **one** reason why the atmospheric pressure changes with height above the Earth's surface.

(1)

.....

.....

(Total for Question 4 = 11 marks)

DO NOT WRITE IN THIS AREA
DO NOT WRITE IN THIS AREA
DO NOT WRITE IN THIS AREA

DO NOT WRITE IN THIS AREA
DO NOT WRITE IN THIS AREA
DO NOT WRITE IN THIS AREA

5 (a) Figure 8 shows two magnets with their N poles facing each other.

Figure 8

On Figure 8, draw the shape and direction of the magnetic field between the two magnets.

(2)

(b) Figure 9 shows a toy that has a plastic cylinder, a plastic base and two similar magnets. Each of the two magnets is in the shape of a ring.

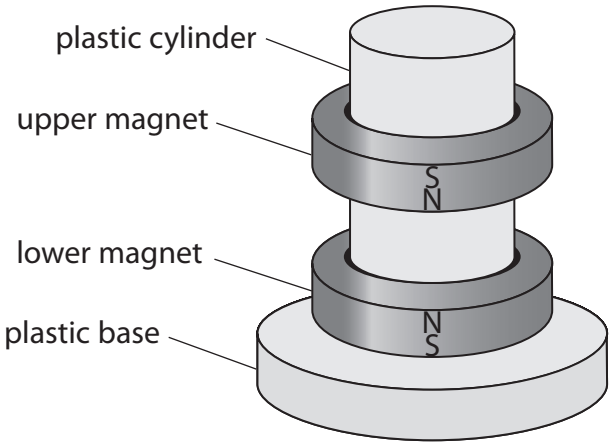

Figure 9

The upper magnet seems to float in the air above the lower magnet.

Describe the forces acting on the upper magnet.

Use the idea of magnetic fields in your answer.

(3)

.....

.....

.....

.....

.....

.....

(c) Figure 10 shows a current-carrying wire between the poles of a magnet.

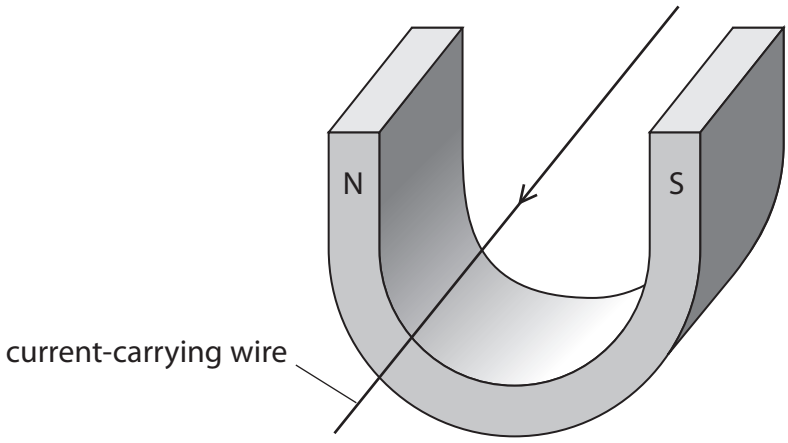

Figure 10

(i) The magnet and the wire each experience a force when there is a current in the wire.

(2)

1 State the direction of the force on the wire.

.....

2 State the direction of the force on the magnet.

.....

(ii) The force on the wire is 0.15 N.

The current in the wire is 2.7 A.

The magnet produces a field with a magnetic flux density of 0.50 T.

Calculate the length of the wire in the magnetic field.

Use an equation selected from the list of equations given at the end of the question paper.

(2)

length of the wire in the magnetic field = ... m

(Total for Question 5 = 9 marks)

DO NOT WRITE IN THIS AREA
DO NOT WRITE IN THIS AREA
DO NOT WRITE IN THIS AREA

DO NOT WRITE IN THIS AREA
DO NOT WRITE IN THIS AREA
DO NOT WRITE IN THIS AREA

BLANK PAGE

6 (a) Figure 11 shows a person doing a push-up exercise.

Figure 11

An upward force is used to cause rotation about a pivot.

Which row of the table is correct for this rotation?

(1)

	provide the upward force	act as a pivot
☒ **A**	arms	hands
☒ **B**	arms	feet
☒ **C**	legs	hands
☒ **D**	legs	feet

(b) Figure 12 shows some of the bones and muscles in an arm.

The arrows show the forces on the forearm when the arm is bent.

The hand is empty.

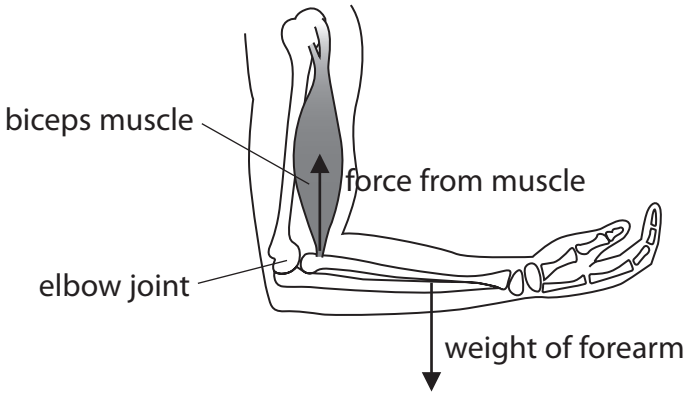

Figure 12

DO NOT WRITE IN THIS AREA
DO NOT WRITE IN THIS AREA
DO NOT WRITE IN THIS AREA

The biceps muscle provides a force to balance the weight of the forearm.

The weight of the forearm can be represented as a single force.

Figure 13 shows a diagram representing the forces and distances involved.

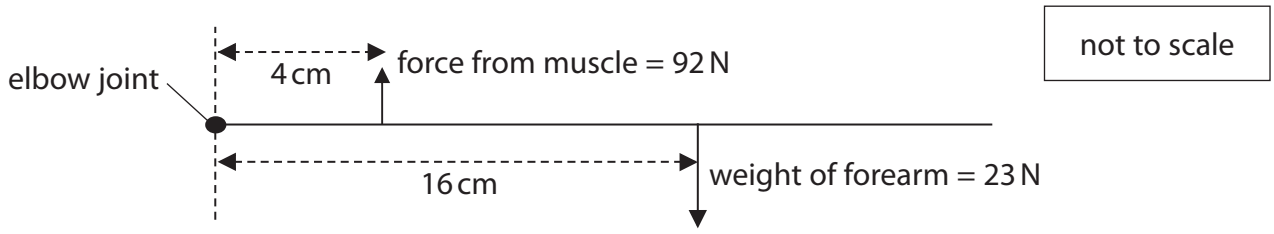

Figure 13

(i) Use the principle of moments to show that the system shown in Figure 13 is in equilibrium.

(2)

.....

.....

.....

.....

(ii) The person then holds a ball weighing 15 N in their hand.

Figure 14 shows the forces on the forearm and their distances from the elbow joint.

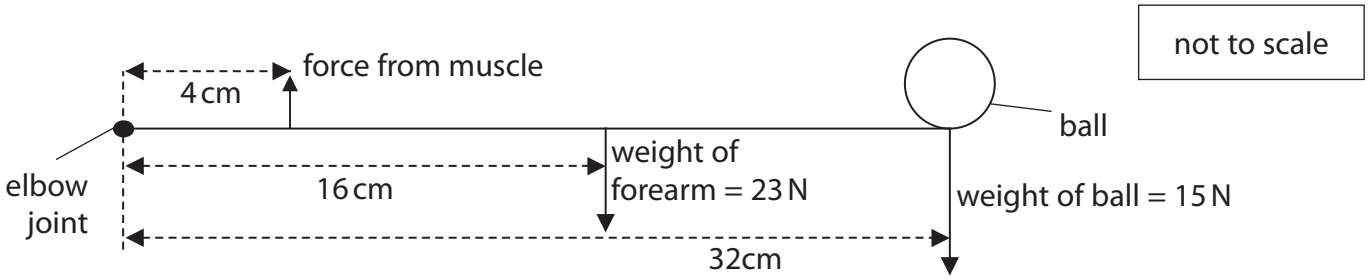

Figure 14

Calculate the force from the muscle that is needed to keep the system in Figure 14 in equilibrium.

(3)

force = ... N

DO NOT WRITE IN THIS AREA
DO NOT WRITE IN THIS AREA
DO NOT WRITE IN THIS AREA

(c) Figure 15 shows a ball floating in seawater and the same ball floating in fresh water.

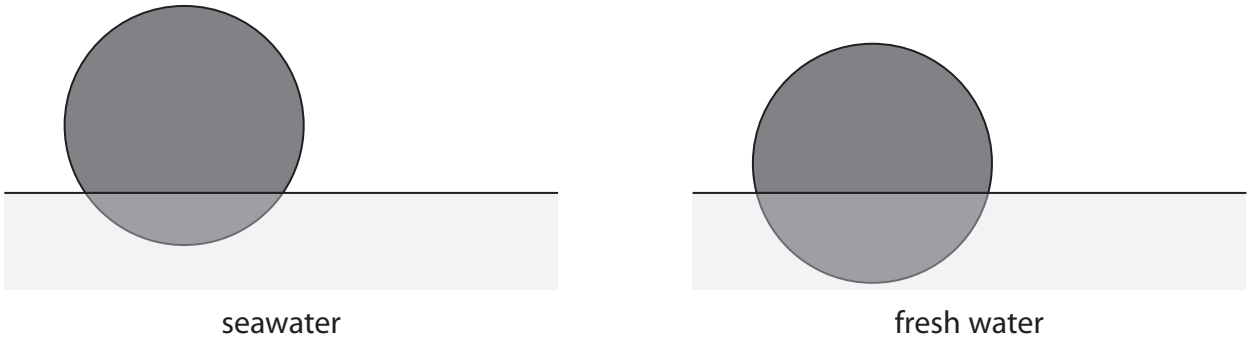

Figure 15

(i) Compare the upthrust on the ball in seawater with the upthrust on the same ball in fresh water.

(1)

.....

.....

(ii) Explain why there is less of the ball below the surface of the seawater than below the surface of the fresh water.

(3)

.....

.....

.....

.....

.....

.....

(Total for Question 6 = 10 marks)

DO NOT WRITE IN THIS AREA
DO NOT WRITE IN THIS AREA
DO NOT WRITE IN THIS AREA

7 (a) Figure 16 shows part of the inside of a pen.

The pen contains a spring that can be compressed.

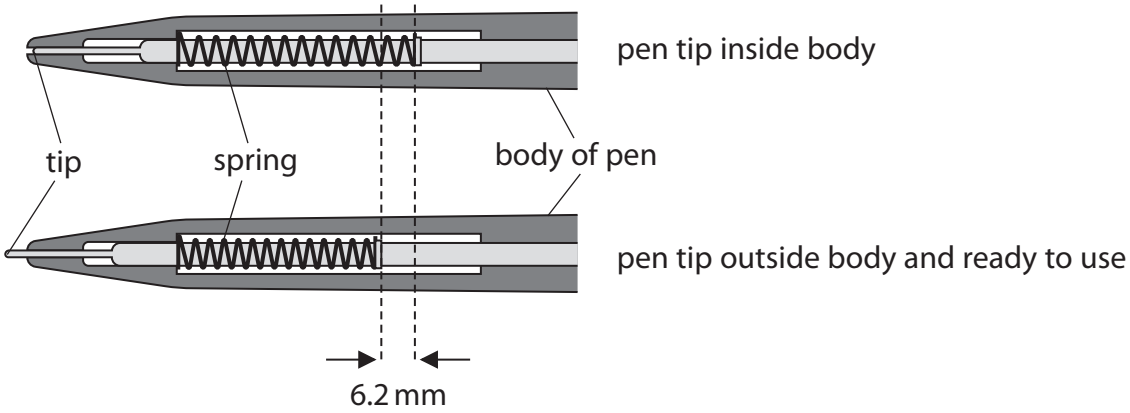

Figure 16

The spring constant of the spring is 260 N/m.

(i) Calculate the force needed to compress the spring by the amount shown in Figure 16.

Give your answer to an appropriate number of significant figures.

(3)

force = ... N

DO NOT WRITE IN THIS AREA
DO NOT WRITE IN THIS AREA
DO NOT WRITE IN THIS AREA

(ii) A student removes the spring from the pen and investigates the compression of the spring.

Figure 17 shows the equipment and the procedure that the student uses.

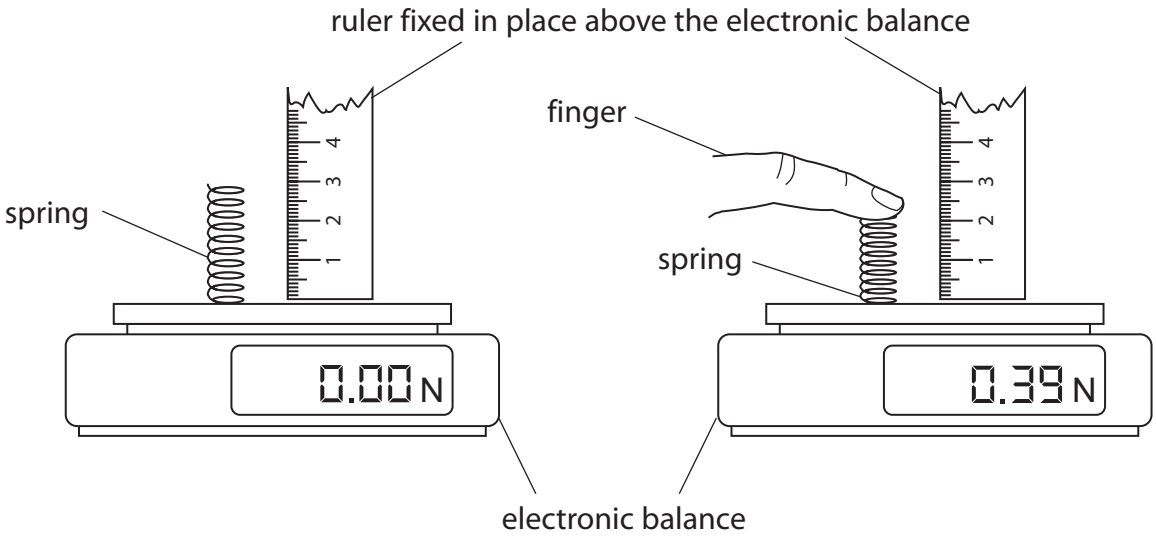

Figure 17

The student presses down on the spring to change its length.

The electronic balance measures the force applied to the spring.

Describe how the student can determine the change in length of the spring. You may add to Figure 17 to help your answer.

(3)

.....

.....

.....

.....

.....

(iii) The student finds it difficult to make an accurate measurement of the change in length of the spring using the equipment as shown.

Describe **one** way that the student could improve the procedure.

(2)

.....

.....

.....

.....

DO NOT WRITE IN THIS AREA
DO NOT WRITE IN THIS AREA
DO NOT WRITE IN THIS AREA

(b) Figure 18 shows a different spring hanging from a hook fixed to the ceiling.

A block hangs from the other end of the spring.

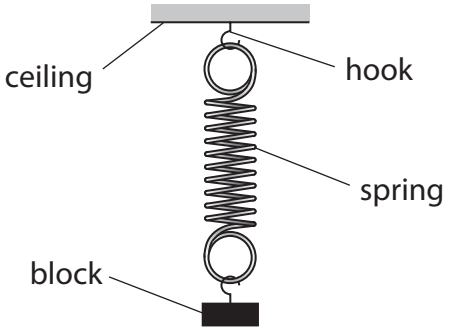

Figure 18

The weight of the spring is 1 N.
The weight of the block is 5 N.

The force exerted on the top of the spring by the hook is

(1)

☒ **A** 4 N down

☒ **B** 4 N up

☒ **C** 6 N down

☒ **D** 6 N up

(c) Figure 19 shows two forces, P and Q, acting at point X.

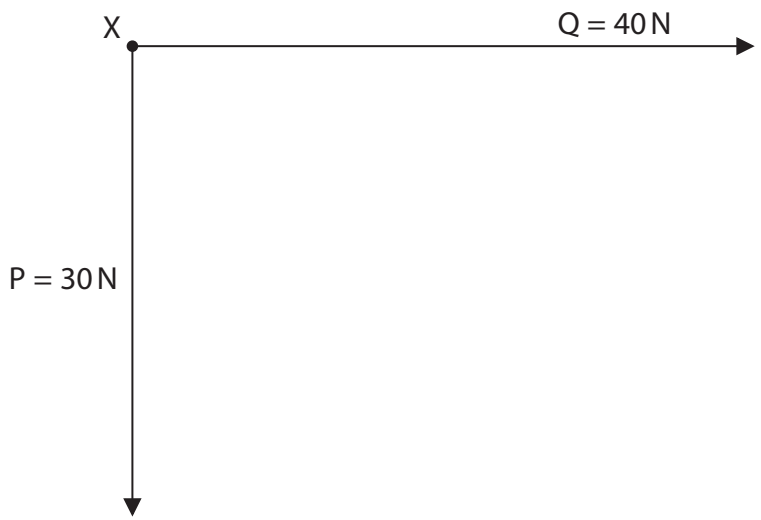

diagram is drawn to scale

Figure 19

Complete the diagram in Figure 19 to show the size and direction of the resultant force, R, on point X.

(2)

(Total for Question 7 = 11 marks)

DO NOT WRITE IN THIS AREA
DO NOT WRITE IN THIS AREA
DO NOT WRITE IN THIS AREA

8 (a) An electric car is travelling at a speed of 16.0 m/s.

The total mass of the car is 1200 kg.

(i) Calculate the kinetic energy, in kJ, of the car.

(2)

kinetic energy = ... kJ

(ii) On a journey, the car transfers energy from the battery at an average rate of 17.5 kW.

The battery in the car transfers a total of 126 MJ of energy before it becomes discharged.

Calculate the time taken for the battery to become discharged on this journey.

Give your answer in hours.

(2)

time taken = ... hours

DO NOT WRITE IN THIS AREA
DO NOT WRITE IN THIS AREA
DO NOT WRITE IN THIS AREA

(iii) Figure 20 shows an electrical device connected to the wheels of an electric car.

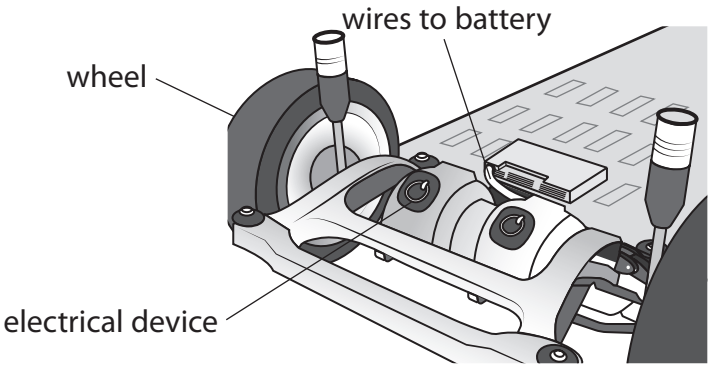

Figure 20

The electrical device is used as a motor when the car accelerates and as a dynamo when the car decelerates.

Explain how using the device can help to increase the time that the car can be driven before the battery becomes discharged.

(2)

.....

.....

.....

.....

DO NOT WRITE IN THIS AREA
DO NOT WRITE IN THIS AREA
DO NOT WRITE IN THIS AREA

(b) The battery can be recharged at a charging point.

The charging point provides an average current of 15.0 A to the battery, at a potential difference (voltage) of 400 V.

It is claimed that 126 MJ of energy can be transferred to the battery in less than 6 hours.

(i) Comment on this claim.

Use this equation to support your answer

$$t = \frac{E}{I \times V}$$

(3)

.....

.....

(ii) Calculate the total charge that moves into the battery while it is being recharged.

Use the equation

$$E = Q \times V$$

(2)

charge = ... C

(Total for Question 8 = 11 marks)

DO NOT WRITE IN THIS AREA
DO NOT WRITE IN THIS AREA
DO NOT WRITE IN THIS AREA

DO NOT WRITE IN THIS AREA
DO NOT WRITE IN THIS AREA
DO NOT WRITE IN THIS AREA

BLANK PAGE

9 (a) Figure 21 shows a pulley system that enables a person to lift a heavy barrel.

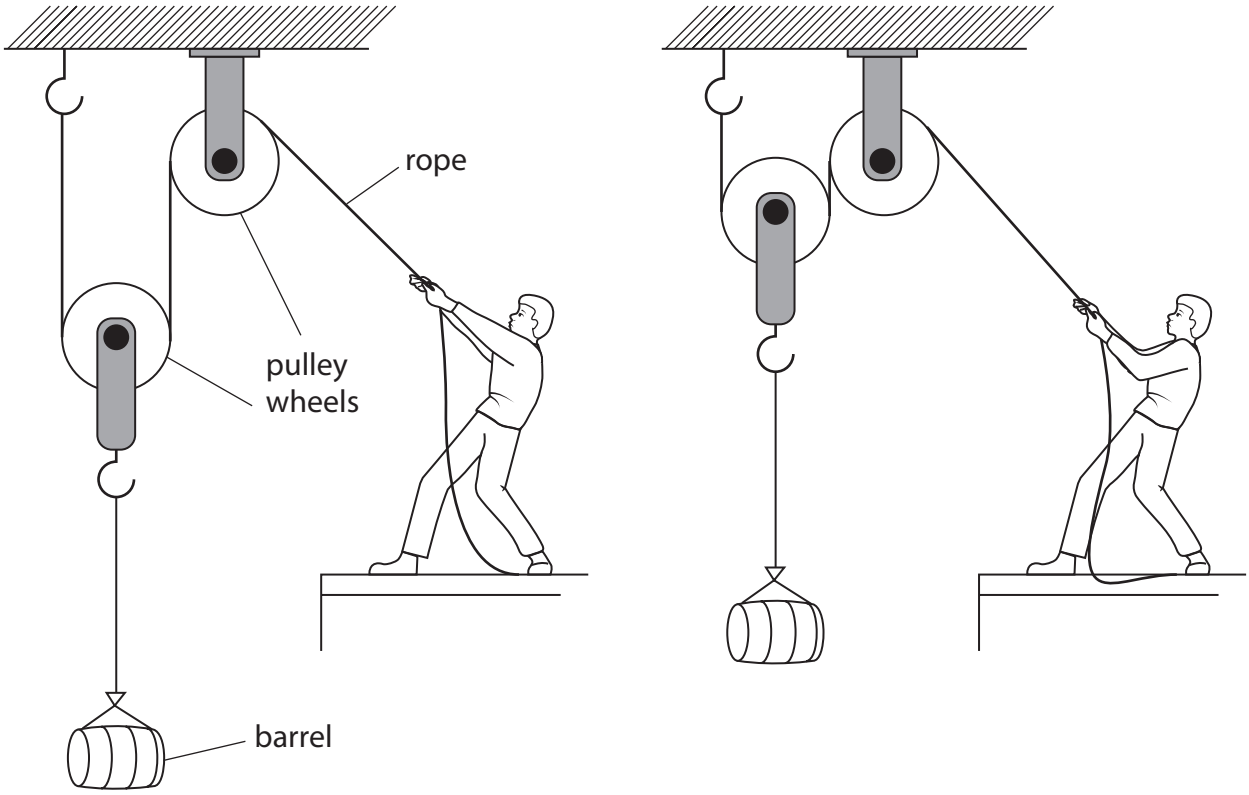

Figure 21

The person pulls down on the rope to make the barrel rise through 1.2 m.

The work done against gravity on the barrel is 1800 J.

(i) Calculate the weight of the barrel.

Use the equation

work done = force × distance moved in the direction of the force

(2)

weight of the barrel = ... N

DO NOT WRITE IN THIS AREA
DO NOT WRITE IN THIS AREA
DO NOT WRITE IN THIS AREA

(ii) The efficiency of the system is 64%.

Calculate the total work done by the person.

Use the equation

$$\text{efficiency} = \frac{\text{(work done against gravity on the barrel)}}{\text{(total work done by the person)}} \times 100\%$$

(2)

work done = ... J

(iii) Some energy is wasted due to friction.

Suggest **another** reason why some energy is wasted in using this pulley system.

(1)

.....

.....

DO NOT WRITE IN THIS AREA
DO NOT WRITE IN THIS AREA
DO NOT WRITE IN THIS AREA

*(b) A student has the equipment shown in Figure 22.

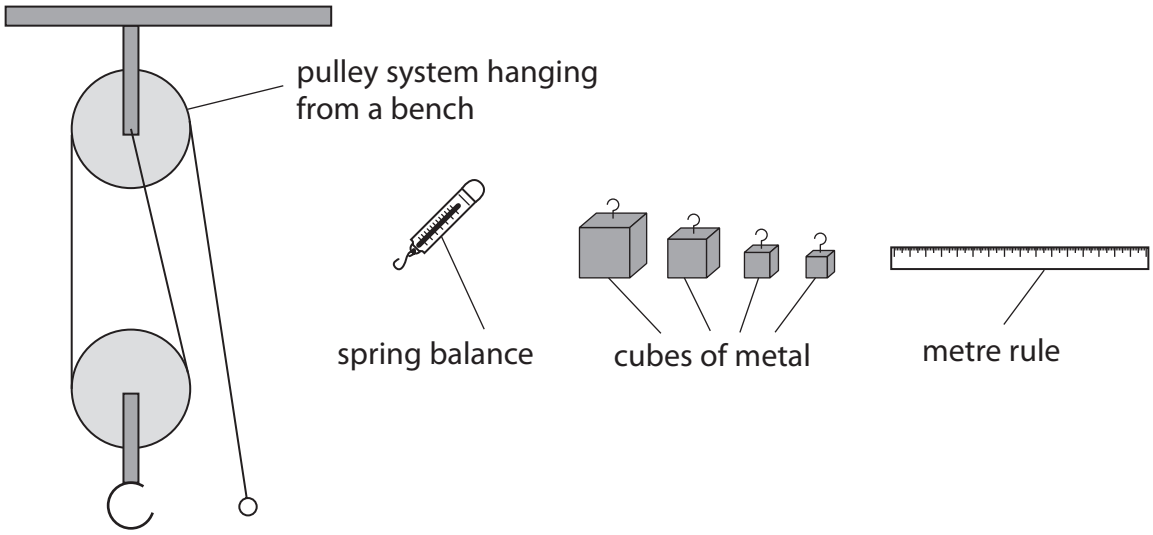

Figure 22

Devise an experiment to investigate how the efficiency of the pulley system varies with the weight of metal being lifted.

Your answer should include how you will use your measurements.

(6)

.....

.....

.....

.....

.....

.....

.....

.....

.....

.....

.....

(Total for Question 9 = 11 marks)

DO NOT WRITE IN THIS AREA
DO NOT WRITE IN THIS AREA
DO NOT WRITE IN THIS AREA

DO NOT WRITE IN THIS AREA
DO NOT WRITE IN THIS AREA
DO NOT WRITE IN THIS AREA

BLANK PAGE

10 (a) Figure 23 shows a model dynamo.

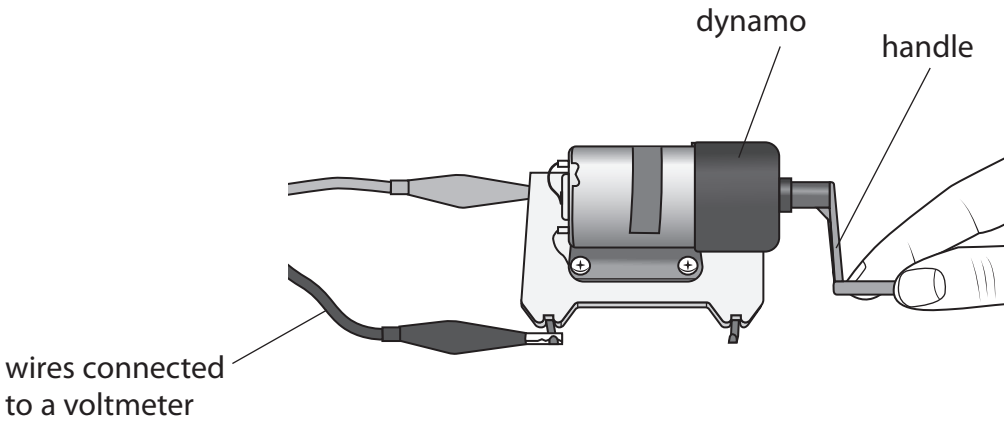

Figure 23

The dynamo contains a coil of wire that can spin inside a permanent magnet.

The dynamo produces a D.C. output.

A teacher connects a voltmeter to the terminals of the dynamo.

The teacher rotates the handle to make the coil spin inside the magnet.

Figure 24(a) shows the reading on the voltmeter.

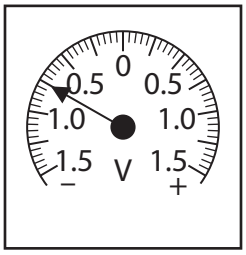

Figure 24(a)

The teacher then rotates the handle differently.

Figure 24(b) shows the new reading on the voltmeter.

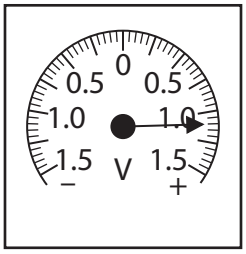

Figure 24(b)

DO NOT WRITE IN THIS AREA
DO NOT WRITE IN THIS AREA
DO NOT WRITE IN THIS AREA

(i) Which row of the table shows how the rotation of the handle has changed between (a) and (b)?

(1)

		speed of rotation	direction of rotation
☒	**A**	(a) faster than (b)	(a) opposite to (b)
☒	**B**	(a) faster than (b)	(a) same as (b)
☒	**C**	(a) slower than (b)	(a) opposite to (b)
☒	**D**	(a) slower than (b)	(a) same as (b)

(ii) The teacher connects the dynamo to a lamp.

It is now more difficult for the teacher to rotate the handle.

Explain why it is more difficult to turn the dynamo when it is connected to a lamp.

(2)

.....

.....

.....

.....

DO NOT WRITE IN THIS AREA
DO NOT WRITE IN THIS AREA
DO NOT WRITE IN THIS AREA

(b) Figure 25 shows a transformer.

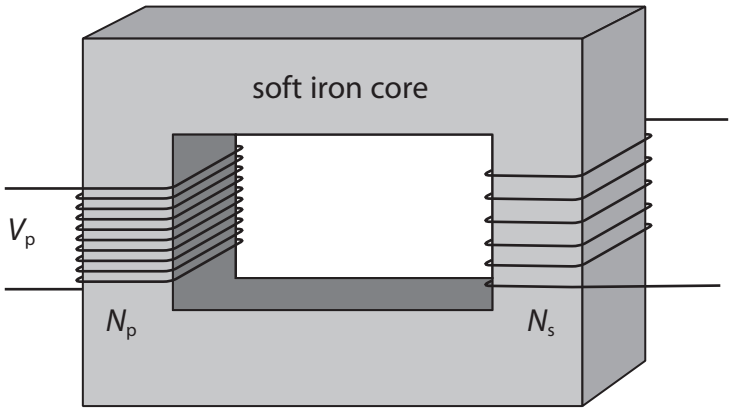

Figure 25

The number of turns on the primary coil, $N_p = 800$

The potential difference across the primary coil, $V_p = 230\,V$

The number of turns on the secondary coil, $N_s = 18$

Calculate the potential difference across the secondary coil.

Use an equation selected from the list of equations at the end of the paper.

(3)

potential difference across the secondary coil = ... *V*

DO NOT WRITE IN THIS AREA
DO NOT WRITE IN THIS AREA
DO NOT WRITE IN THIS AREA

*(c) Figure 26 shows a picture of an electrical device and a simplified drawing of the important parts.

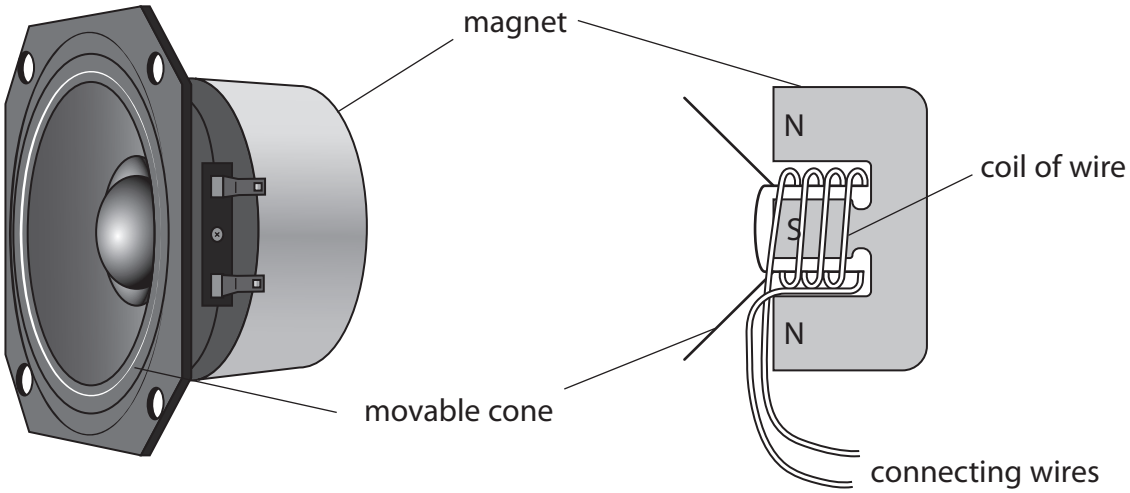

Figure 26

The device can be used as a loudspeaker or it can be used as a microphone.

Compare how the device operates when used as a loudspeaker with how the device operates when used as a microphone.

(6)

.....

.....

.....

.....

.....

.....

.....

.....

.....

.....

.....

(Total for Question 10 = 12 marks)

TOTAL FOR PAPER = 100 MARKS

DO NOT WRITE IN THIS AREA
DO NOT WRITE IN THIS AREA
DO NOT WRITE IN THIS AREA

Equations

(final velocity)^2 – (initial velocity)^2 = 2 × acceleration × distance

$v^2 - u^2 = 2 \times a \times x$

force = change in momentum ÷ time

$$F = \frac{(mv - mu)}{t}$$

energy transferred = current × potential difference × time

$E = I \times V \times t$

force on a conductor at right angles to a magnetic field carrying a current = magnetic flux density × current × length

$F = B \times I \times l$

$$\frac{\text{potential difference across primary coil}}{\text{potential difference across secondary coil}} = \frac{\text{number of turns in primary coil}}{\text{number of turns in secondary coil}}$$

$$\frac{V_p}{V_s} = \frac{N_p}{N_s}$$

potential difference across primary coil × current in primary coil = potential difference across secondary coil × current in secondary coil

$V_p \times I_p = V_s \times I_s$

change in thermal energy = mass × specific heat capacity × change in temperature

$\Delta Q = m \times c \times \Delta\theta$

thermal energy for a change of state = mass × specific latent heat

$Q = m \times L$

to calculate pressure or volume for gases of fixed mass at constant temperature

$P_1 V_1 = P_2 V_2$

energy transferred in stretching = 0.5 × spring constant × (extension)^2

$E = ½ \times k \times x^2$

pressure due to a column of liquid = height of column × density of liquid × gravitational field strength

$P = h \times \rho \times g$

DO NOT WRITE IN THIS AREA
DO NOT WRITE IN THIS AREA
DO NOT WRITE IN THIS AREA

DO NOT WRITE IN THIS AREA
DO NOT WRITE IN THIS AREA
DO NOT WRITE IN THIS AREA

BLANK PAGE

BLANK PAGE

DO NOT WRITE IN THIS AREA
DO NOT WRITE IN THIS AREA
DO NOT WRITE IN THIS AREA