Please check the examination details below before entering your candidate information

Candidate surname	Other names

Centre Number | Candidate Number

Pearson Edexcel Level 1/Level 2 GCSE (9–1)

Time 1 hour 45 minutes

Paper reference **1PH0/2H**

Physics
PAPER 2
Higher Tier

You must have:
Calculator, ruler, Equation Booklet (enclosed)

Total Marks

Instructions
- Use **black** ink or ball-point pen.
- **Fill in the boxes** at the top of this page with your name, centre number and candidate number.
- Answer **all** questions.
- Answer the questions in the spaces provided – *there may be more space than you need.*
- Calculators may be used.
- Any diagrams may NOT be accurately drawn, unless otherwise indicated.
- You must **show all your working out** with **your answer clearly identified** at the **end of your solution**.

Information
- The total mark for this paper is 100.
- The marks for **each** question are shown in brackets – *use this as a guide as to how much time to spend on each question.*
- In questions marked with an **asterisk (*)**, marks will be awarded for your ability to structure your answer logically, showing how the points that you make are related or follow on from each other where appropriate.
- A list of equations is included at the end of this exam paper.

Advice
- Read each question carefully before you start to answer it.
- Try to answer every question.
- Check your answers if you have time at the end.

Turn over

©2022 Pearson Education Ltd.

Pearson

Answer ALL questions. Write your answers in the spaces provided.

Some questions must be answered with a cross in a box ☒. If you change your mind about an answer, put a line through the box ☒ and then mark your new answer with a cross ☒.

1 This question is about static electricity.

(a) Draw on Figure 1 the shape and direction of the electric field due to the positive point charge.

(2)

Figure 1

(b) A student rubs a plastic ruler against a woolly jumper.

The student tests the ruler and finds it has a positive charge.

Explain how the ruler becomes positively charged.

(2)

.....

.....

.....

.....

DO NOT WRITE IN THIS AREA
DO NOT WRITE IN THIS AREA
DO NOT WRITE IN THIS AREA

(c) An insecticide sprayer charges droplets of insecticide.

Figure 2 shows the sprayer being used to spray a leaf.

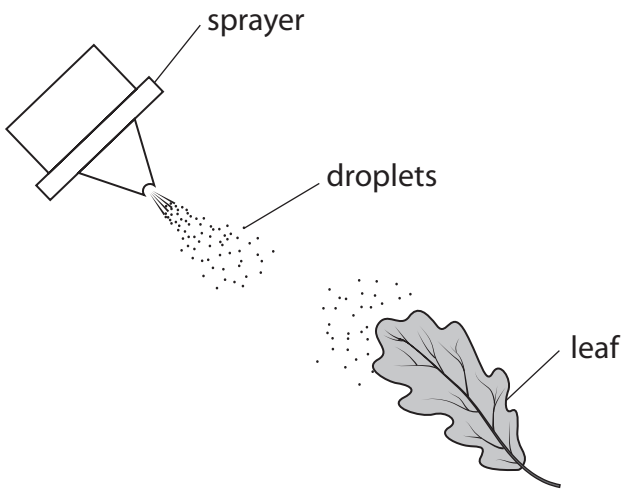

Figure 2

The leaf is connected to the ground (earthed).

Explain how charging the droplets helps to make sure that the leaf gets covered with insecticide.

You may add to Figure 2, including the sign (+ or –) of any charges, to help your answer.

(3)

.....

.....

.....

.....

.....

.....

.....

.....

(Total for Question 1 = 7 marks)

DO NOT WRITE IN THIS AREA
DO NOT WRITE IN THIS AREA
DO NOT WRITE IN THIS AREA

2 (a) Figure 3 shows a lamp connected to a d.c. power supply.

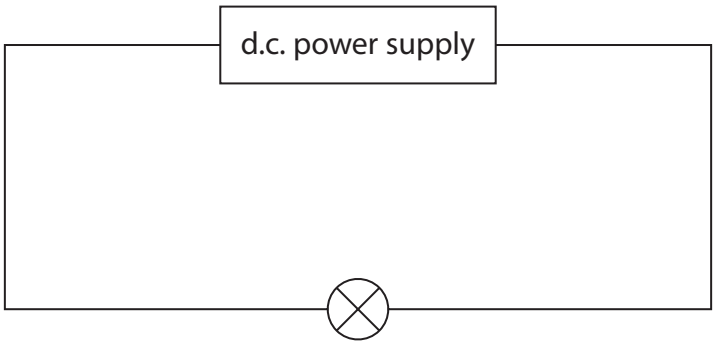

Figure 3

The power supply provides a potential difference (voltage) of 4.5 V.

The current in the lamp is 0.30 A.

(i) Calculate the resistance of the lamp.

Use the equation

$$R = \frac{V}{I}$$

(1)

resistance = ... Ω

(ii) Calculate the power supplied to the lamp.

(2)

power = ... W

DO NOT WRITE IN THIS AREA
DO NOT WRITE IN THIS AREA
DO NOT WRITE IN THIS AREA

(b) Another **identical** lamp is added to the circuit, as shown in Figure 4.

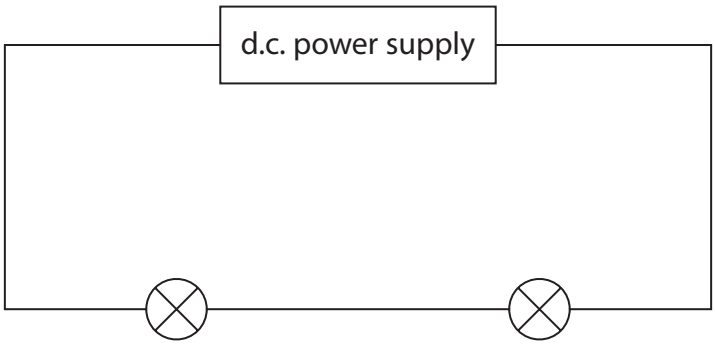

Figure 4

The power supply provides the same potential difference as it provided in the circuit in Figure 3.

State and explain the difference between the brightness of the lamp in Figure 3 and the brightness of a lamp in Figure 4.

(3)

.....

.....

.....

.....

.....

DO NOT WRITE IN THIS AREA
DO NOT WRITE IN THIS AREA
DO NOT WRITE IN THIS AREA

(c) A student is given a low voltage power supply and 1 m of resistance wire.

The student uses these and other pieces of equipment to measure the resistance of just 50 cm of the resistance wire.

Draw a diagram of the circuit that the student should use.

Your circuit diagram should identify the pieces of equipment that the student uses.

(3)

(Total for Question 2 = 9 marks)

DO NOT WRITE IN THIS AREA
DO NOT WRITE IN THIS AREA
DO NOT WRITE IN THIS AREA

DO NOT WRITE IN THIS AREA
DO NOT WRITE IN THIS AREA
DO NOT WRITE IN THIS AREA

3 (a) When water boils and turns into steam, there are changes in the arrangement of particles and the density.

Which of these shows the changes?

(1)

		space between particles in steam	density of steam
☒	**A**	bigger than in water	greater than water
☒	**B**	bigger than in water	less than water
☒	**C**	smaller than in water	greater than water
☒	**D**	smaller than in water	less than water

(b) Figure 5 shows some water in a measuring cylinder and a lump of iron.

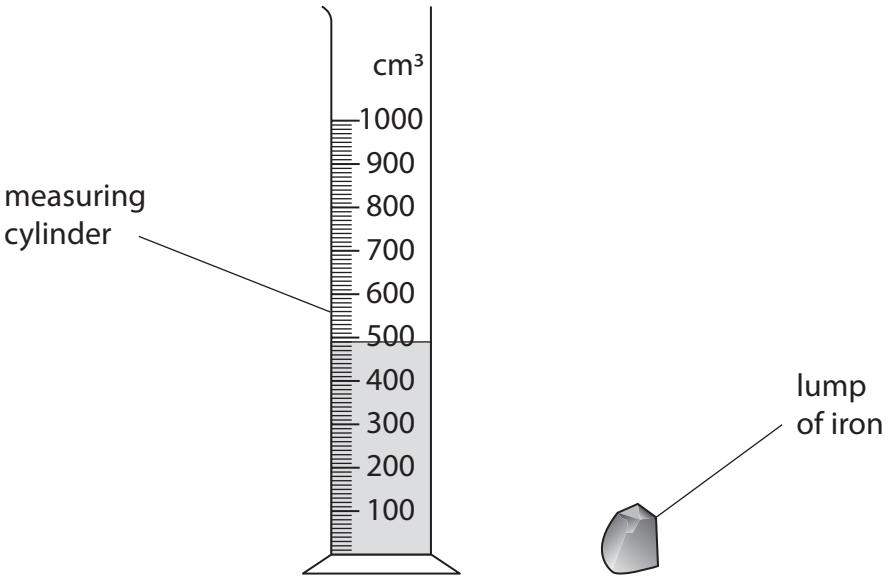

Figure 5

The lump of iron is lowered fully into the water.

The water level in the measuring cylinder rises to 530 cm^3.

The density of iron is 7.9 g / cm^3.

Calculate the mass of the lump of iron.

Use the equation

$$\text{density} = \frac{\text{mass}}{\text{volume}}$$

Give your answer to 2 significant figures.

(4)

mass = ... g

DO NOT WRITE IN THIS AREA
DO NOT WRITE IN THIS AREA
DO NOT WRITE IN THIS AREA

(c) A piece of wood has a similar shape and volume to the lump of iron.

The density of the wood is 0.82 g / cm^3.

The density of water is 1.00 g / cm^3

Explain why the method used in part (b) cannot be used to determine the mass of the piece of wood.

(2)

.....

.....

.....

.....

(d) Describe what happens when a substance experiences sublimation.

(2)

.....

.....

.....

(Total for Question 3 = 9 marks)

DO NOT WRITE IN THIS AREA
DO NOT WRITE IN THIS AREA
DO NOT WRITE IN THIS AREA

4 (a)

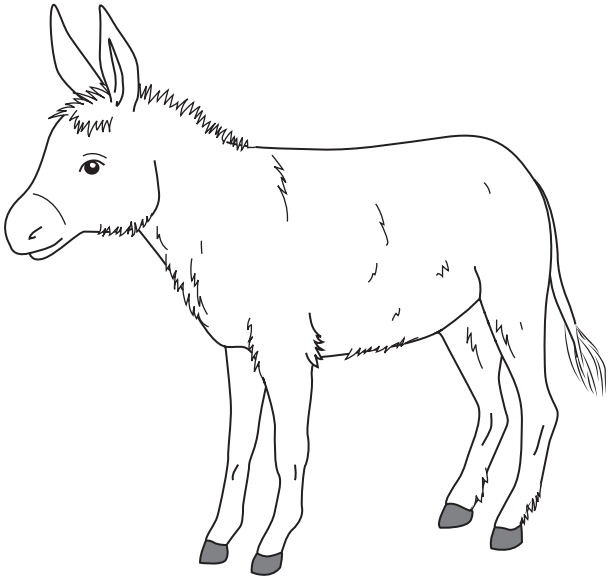

Figure 6

A donkey has a weight of 2500 N.

The area of each hoof is 0.022 m^2.

(i) Calculate the average pressure that the donkey exerts on the ground.

Use the equation

$$\text{pressure} = \frac{\text{force}}{\text{area}}$$

(2)

average pressure = ... Pa

DO NOT WRITE IN THIS AREA
DO NOT WRITE IN THIS AREA
DO NOT WRITE IN THIS AREA

(ii) Figure 7 shows how the shape of a camel's hoof is different from the shape of a donkey's hoof.

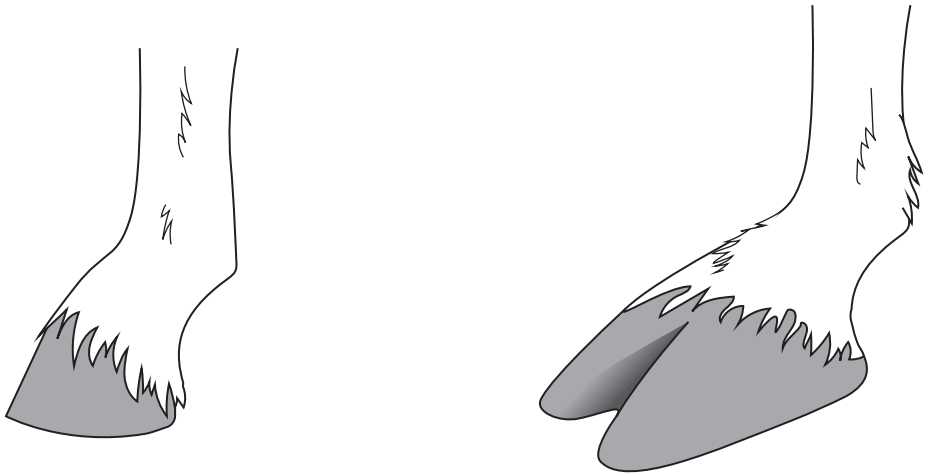

donkey hoof camel hoof

Both diagrams are drawn to the same scale.

Figure 7

The camel and the donkey have the same mass.

Explain how a camel's hoof is a more suitable shape than a donkey's hoof for walking on soft ground.

(2)

.....

.....

.....

DO NOT WRITE IN THIS AREA
DO NOT WRITE IN THIS AREA
DO NOT WRITE IN THIS AREA

(b) A student carries out an investigation to show how pressure varies with depth in water.

A pressure sensor is attached to a rule.

The rule and pressure sensor are lowered into the water in a tank, as shown in Figure 8.

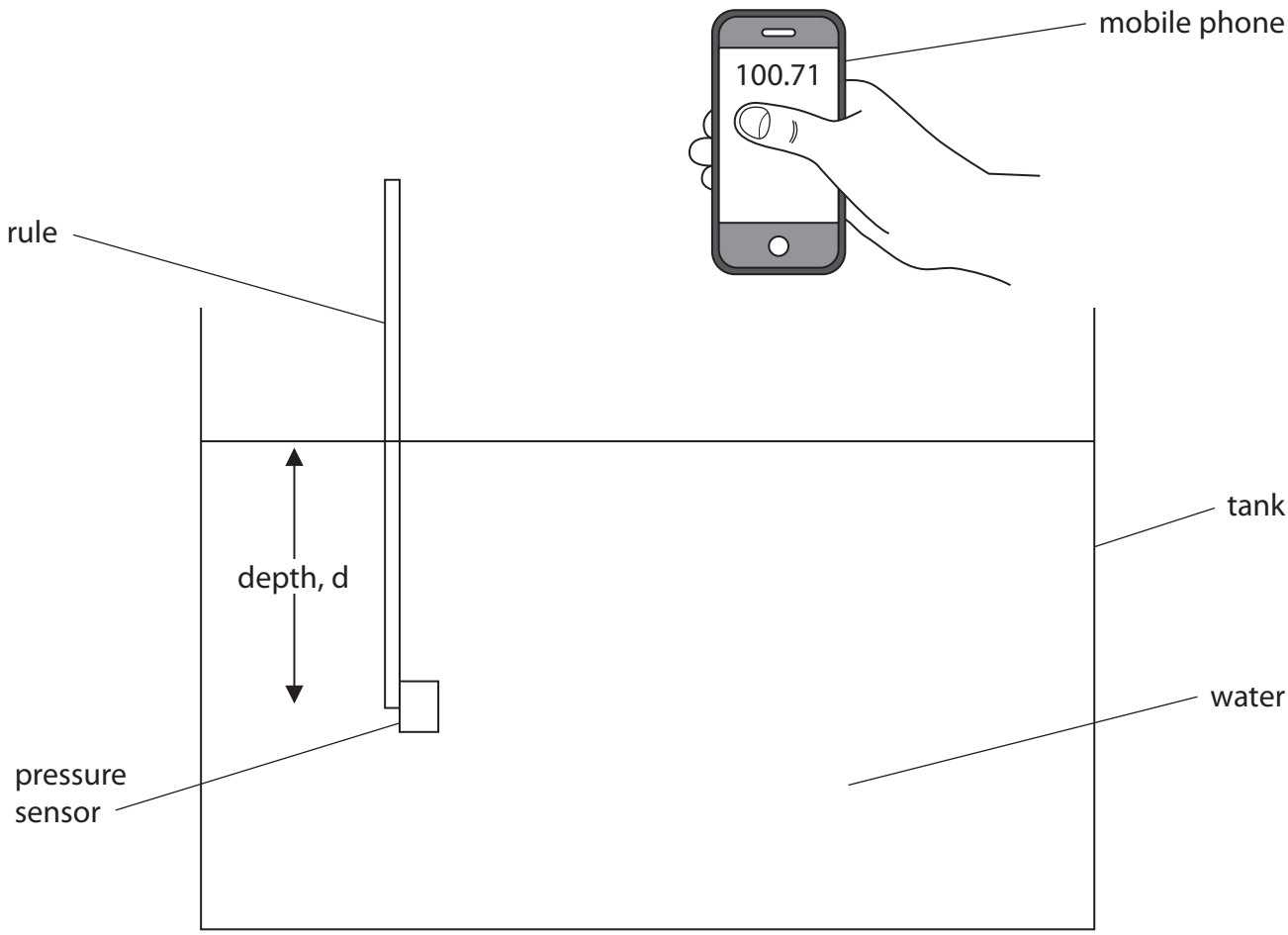

Figure 8

The depth of the pressure sensor below the surface of the water is read from the scale on the rule.

The pressure is displayed on the student's mobile phone which receives a signal from the pressure sensor.

DO NOT WRITE IN THIS AREA
DO NOT WRITE IN THIS AREA
DO NOT WRITE IN THIS AREA

DO NOT WRITE IN THIS AREA
DO NOT WRITE IN THIS AREA
DO NOT WRITE IN THIS AREA

Figure 9 gives some of the readings.

depth in m	pressure in kPa
0.050	99.15
0.100	99.70
0.150	100.15
0.200	100.70
0.250	101.15
0.300	101.70

Figure 9

Figure 10 shows a graph with some of the results plotted, but two of the points are missing.

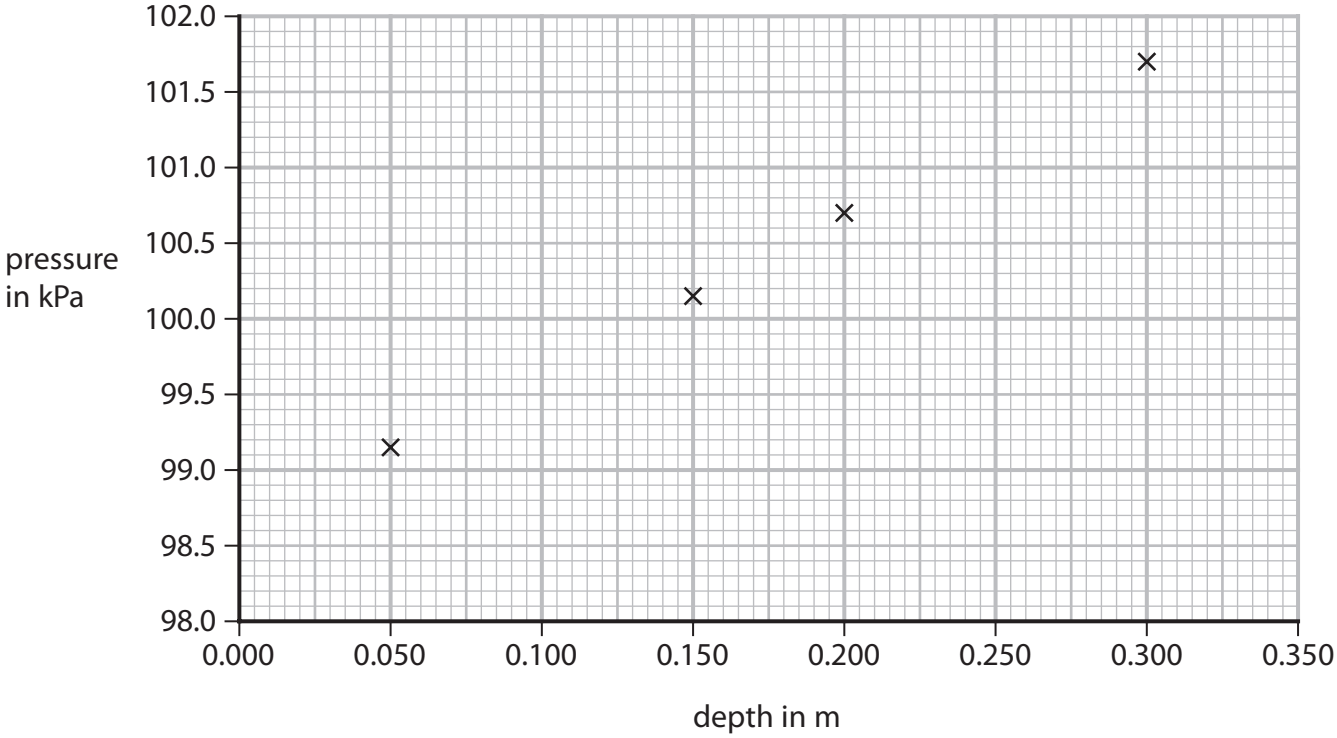

Figure 10

(i) Plot the two missing points on the graph.

(2)

(ii) Draw a line of best fit through the points on the graph.

(1)

(iii) Which of the following equations represents the variation of pressure with depth of water below the surface?

(1)

☒ **A** $y = ax^2 + b$

☒ **B** $y = mx$

☒ **C** $Y = mc - x$

☒ **D** $y = mx + c$

(iv) Use the graph in Figure 10 to predict the pressure at the surface of the water.

(1)

pressure at the surface of the water = ... kPa

(c) The student repeats the investigation in part (b) using seawater and draws a graph of the results.

The seawater is more dense than the water used in part (b).

Compare the graph for seawater with the graph in Figure 10.

(2)

.....

.....

.....

.....

(Total for Question 4 = 11 marks)

DO NOT WRITE IN THIS AREA
DO NOT WRITE IN THIS AREA
DO NOT WRITE IN THIS AREA

DO NOT WRITE IN THIS AREA
DO NOT WRITE IN THIS AREA
DO NOT WRITE IN THIS AREA

5 (a) Figure 11 shows the shape of the magnetic field near a bar magnet.

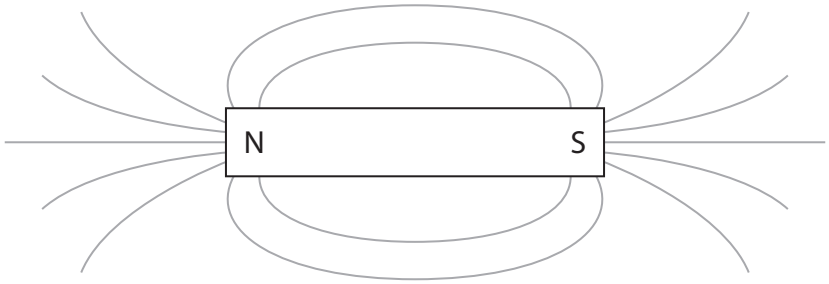

Figure 11

(i) Draw arrows on the field lines in Figure 11 to show the direction of the magnetic field.

(1)

(ii) Place a letter X on Figure 11 at a place where the magnetic field is strongest.

(1)

(iii) Describe **two** differences between the magnetic field shown in Figure 11 and a uniform magnetic field.

(2)

.....

.....

.....

.....

(b) State how a uniform magnetic field may be obtained in a school laboratory.

(1)

.....

.....

(c) Figure 12 shows the directions of some plotting compass needles placed at different points near the Earth's surface.

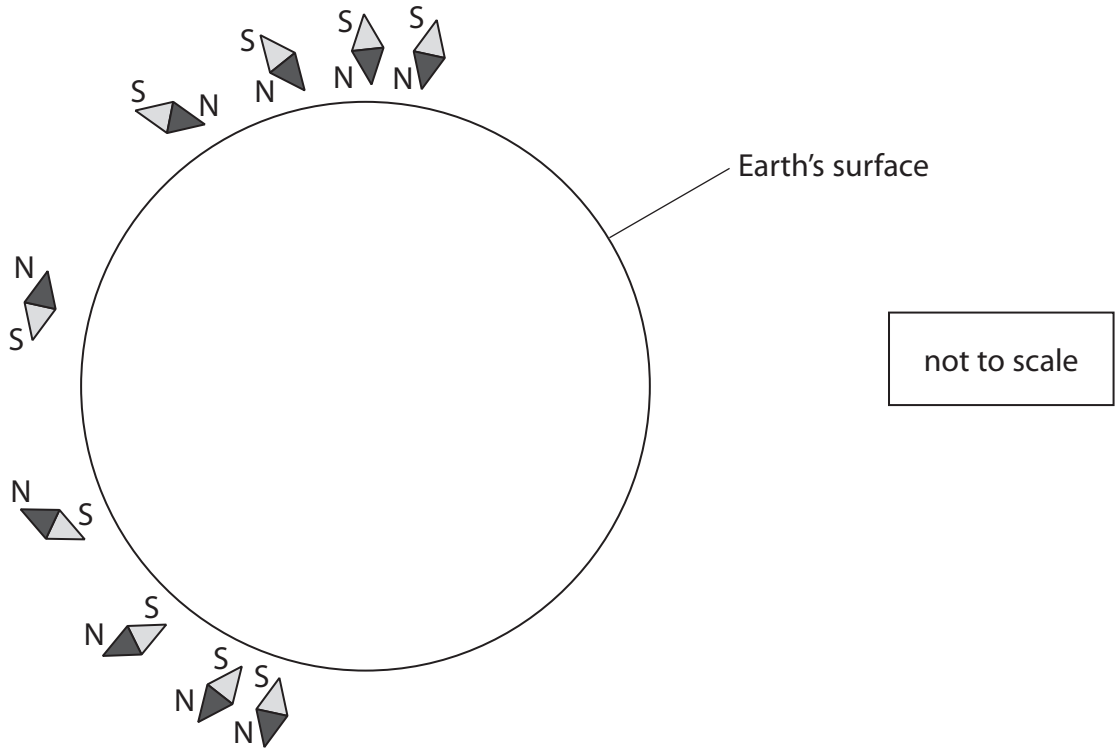

Figure 12

(i) Sketch, on Figure 12, the Earth's magnetic field outside and inside the Earth.

(2)

(ii) State which part of the Earth generates its magnetic field.

(1)

.....

.....

DO NOT WRITE IN THIS AREA
DO NOT WRITE IN THIS AREA
DO NOT WRITE IN THIS AREA

(d) A wire is placed at right angles to the Earth's magnetic field.

The wire is 0.600 m long and carries a current of 93.1 mA.

The force on the wire is 1.11×10^{-5} N.

Calculate the magnetic flux density of the Earth's magnetic field.

Use the equation

$$F = B \times I \times l$$

(2)

magnetic flux density = ... T

(Total for Question 5 = 10 marks)

DO NOT WRITE IN THIS AREA
DO NOT WRITE IN THIS AREA
DO NOT WRITE IN THIS AREA

6 (a) Which of these is a vector quantity?

(1)

☒ **A** acceleration

☒ **B** speed

☒ **C** time

☒ **D** distance

(b) Figure 13 shows a toy that a student makes for a nursery school.

The rod hangs by a string from the ceiling.

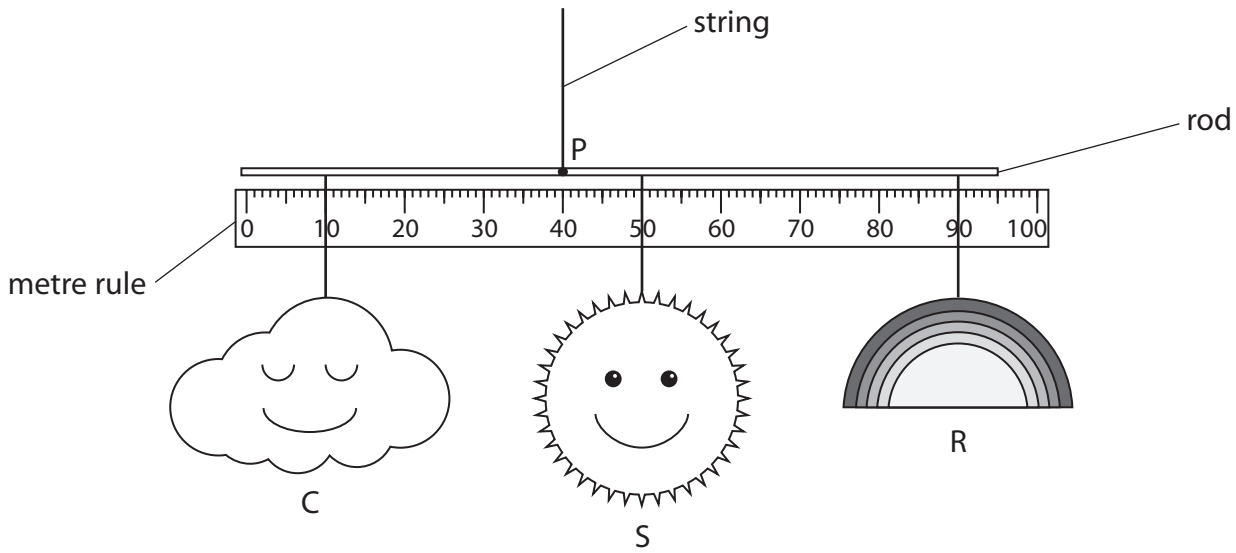

weight of S = 2.0 N weight of R = 1.0 N

Figure 13

(i) The moment of C about point P is 0.60 Nm.

Calculate the weight of C.

Use the equation

$$\text{moment} = F \times d$$

(2)

weight of C ..... N

P 7 0 8 0 8 A 0 1 8 3 6

DO NOT WRITE IN THIS AREA DO NOT WRITE IN THIS AREA DO NOT WRITE IN THIS AREA

(ii) Show that the total moment of S and R about P is 0.70 N m.

(2)

(iii) Using the data in the question and the principle of moments, determine if the toy shown in Figure 13 is in equilibrium.

The rod is very light so its weight can be ignored.

(3)

.....

.....

.....

.....

.....

.....

.....

DO NOT WRITE IN THIS AREA
DO NOT WRITE IN THIS AREA
DO NOT WRITE IN THIS AREA

(c) Figure 14 show a rack and pinion system, used on a mountain railway.

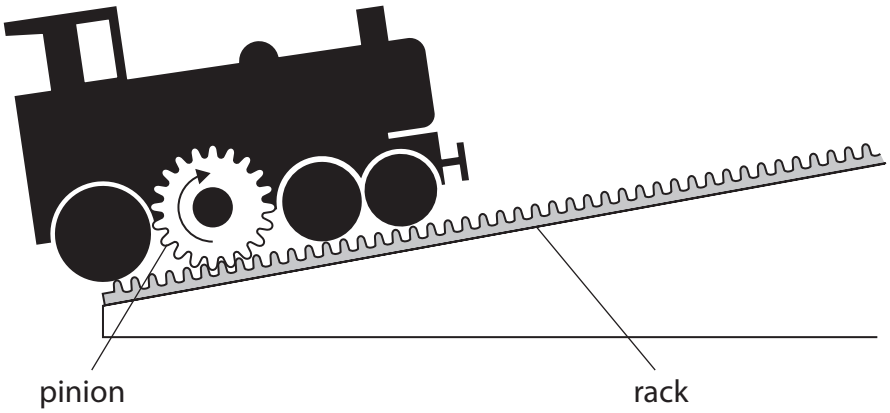

Figure 14

The teeth on the rack are 8.0 cm apart.

Calculate how far along the rack the train moves when the pinion turns through one complete revolution.

(2)

distance = ... m

(Total for Question 6 = 10 marks)

DO NOT WRITE IN THIS AREA
DO NOT WRITE IN THIS AREA
DO NOT WRITE IN THIS AREA

DO NOT WRITE IN THIS AREA
DO NOT WRITE IN THIS AREA
DO NOT WRITE IN THIS AREA

BLANK PAGE

7 (a) Figure 15 shows a 'Mars rover' descending to the surface of the planet Mars.

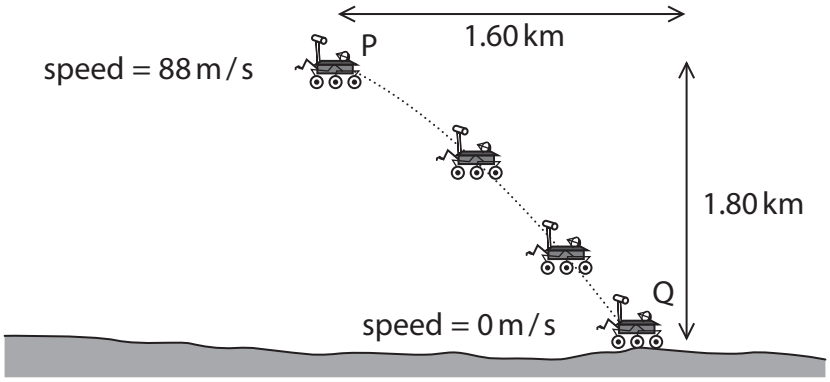

Figure 15

(i) Calculate the change in gravitational potential energy of the rover as it descends from position P to position Q.

Mass of rover = 1100 kg

Gravitational field strength on Mars = 3.7 N / kg

Give your answer to 2 significant figures.

(3)

change in gravitational potential energy = ... J

(ii) Use data from Figure 15 to calculate the change in kinetic energy of the rover as it descends from position P to position Q.

(2)

change in kinetic energy = ... J

DO NOT WRITE IN THIS AREA
DO NOT WRITE IN THIS AREA
DO NOT WRITE IN THIS AREA

(iii) The rover is slowed down safely using thrusters and a parachute (not shown in Figure 15).

The thrusters use jets of gas to control movements and the parachute is designed to be used in the atmosphere of Mars.

Describe the energy changes involved in terms of the work done by various forces as the rover descends.

(3)

.....

.....

.....

.....

.....

(b) The rover uses solar panels for its power needs.

The solar panels can provide 1200 W of power.

(i) Show that the solar panels can provide 2.16 MJ of energy in 30 minutes.

(1)

(ii) The solar panels convert 27% of the energy they receive from the Sun into electricity.

Calculate the solar energy received by the panels that provides the 2.16 MJ of energy.

(2)

energy received = ... J

(Total for Question 7 = 11 marks)

DO NOT WRITE IN THIS AREA
DO NOT WRITE IN THIS AREA
DO NOT WRITE IN THIS AREA

8 (a) Which of these shows the correct circuit symbol for a thermistor?

(1)

☒ **A** 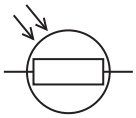

☒ **B** 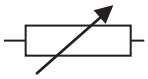

☒ **C** 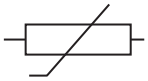

☒ **D** 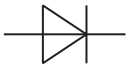

DO NOT WRITE IN THIS AREA
DO NOT WRITE IN THIS AREA
DO NOT WRITE IN THIS AREA

(b) A student investigates how the resistance of a thermistor varies with temperature.

Figure 16 shows a graph of the results of this investigation.

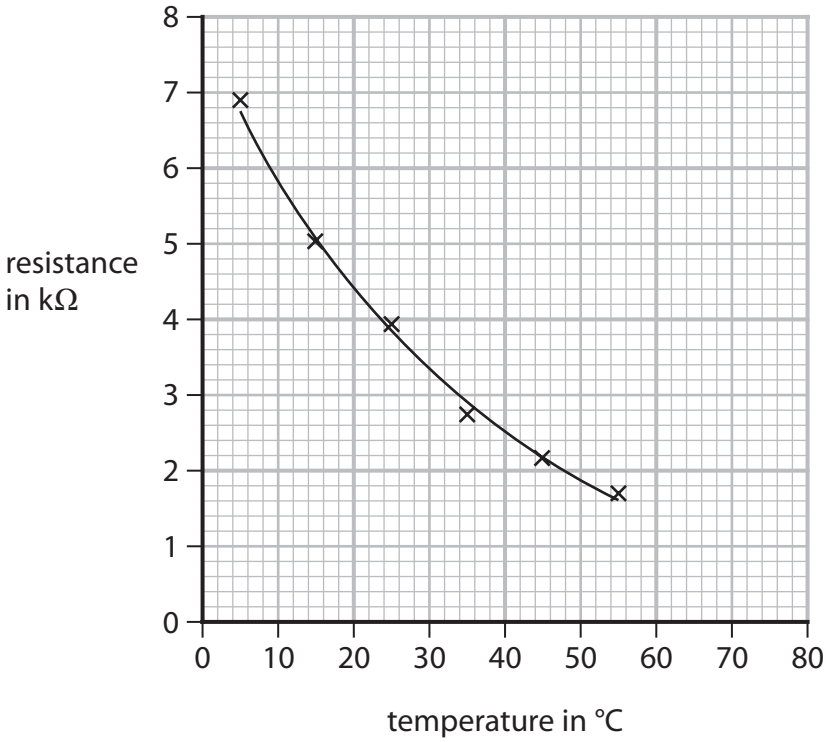

Figure 16

(i) Describe how the resistance of this thermistor varies with temperature.

(2)

.....

.....

.....

.....

(ii) Draw the tangent to the curve at a temperature of 30 °C, to find the rate of change of resistance with temperature at 30 °C.

State the unit.

(3)

rate of change of resistance with temperature at 30 °C = ... unit .....

DO NOT WRITE IN THIS AREA
DO NOT WRITE IN THIS AREA
DO NOT WRITE IN THIS AREA

(c) Figure 17 shows the apparatus used for this investigation.

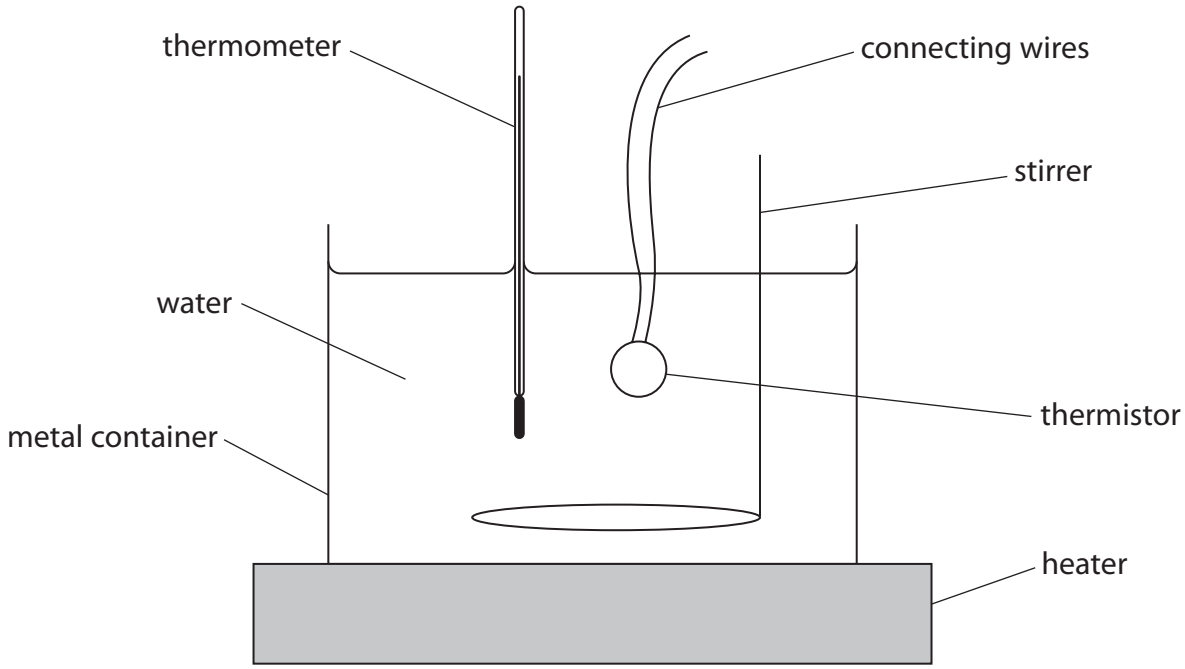

Figure 17

(i) Explain **one** improvement in measurement that the student could make in the investigation.

(2)

.....

.....

.....

.....

DO NOT WRITE IN THIS AREA
DO NOT WRITE IN THIS AREA
DO NOT WRITE IN THIS AREA

In this investigation, the resistance can be measured in two ways.

Method 1 – use an ohmmeter.

Method 2 – use an ammeter and a voltmeter.

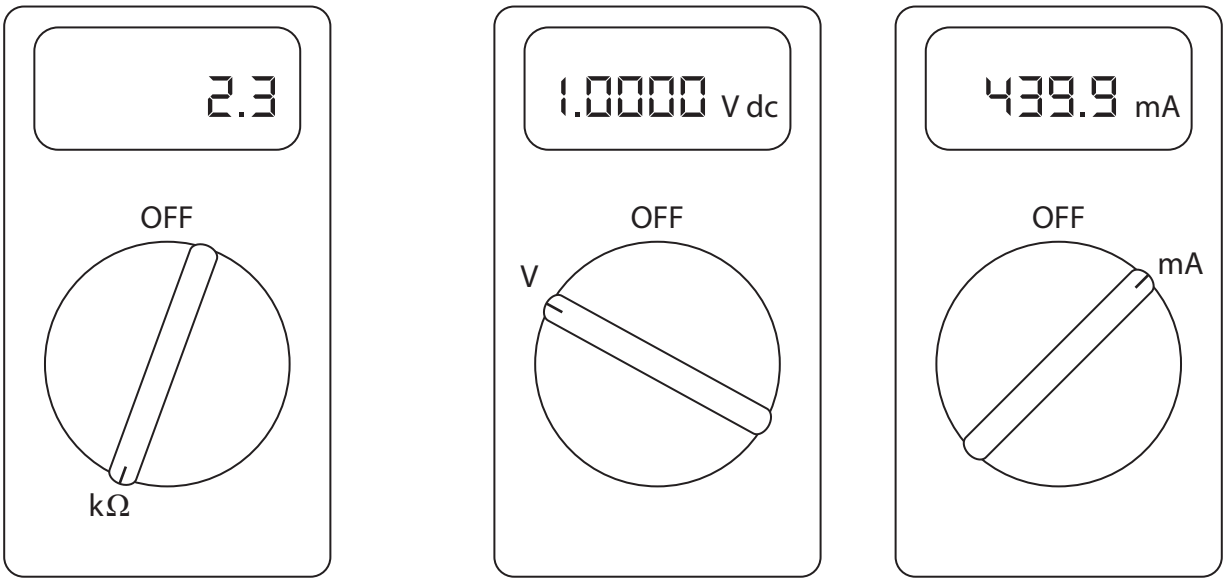

Method 1

using an ohmmeter

Method 2

using an ammeter and voltmeter

Figure 18

(ii) Explain why method 2 gives more precise results than method 1.

(2)

.....

.....

.....

.....

(Total for Question 8 = 10 marks)

DO NOT WRITE IN THIS AREA
DO NOT WRITE IN THIS AREA
DO NOT WRITE IN THIS AREA

9 (a) Explain the difference between the term 'specific heat capacity' and the term 'specific latent heat' when applied to heating substances.

(2)

.....

.....

.....

.....

(b) Figure 19 shows some apparatus that may be used to determine the specific heat capacity of water.

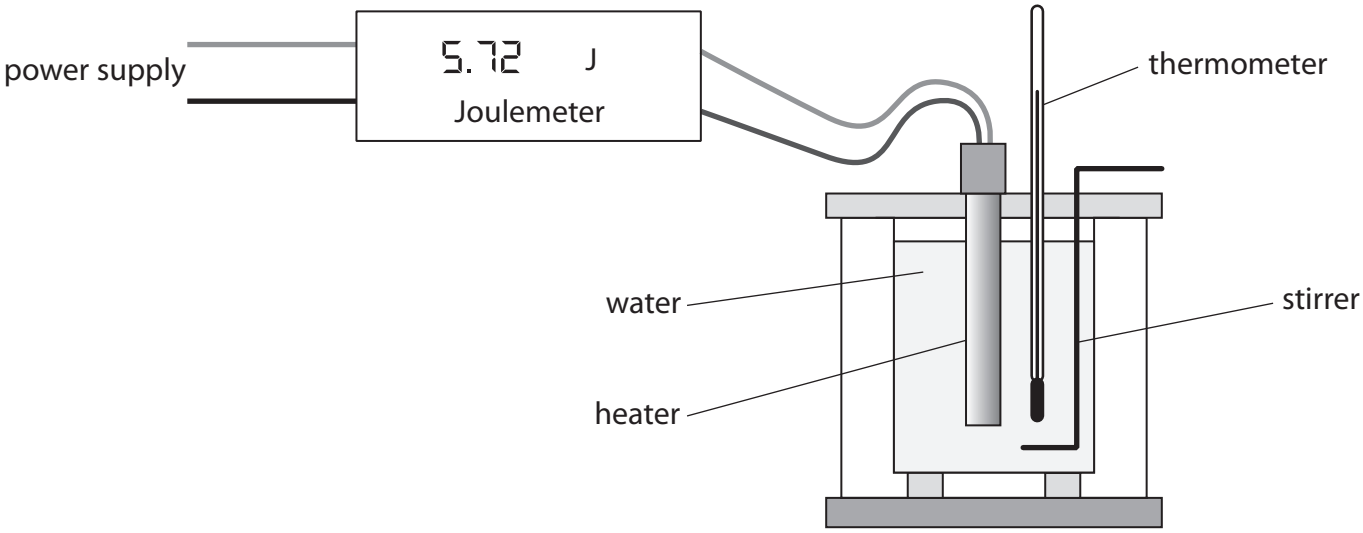

Figure 19

A student measures the initial temperature of the water.

The power supply is switched on for 10 minutes and then switched off.

Explain how the student should then obtain an accurate reading for the final temperature of the water, to be used in the calculation of the specific heat capacity.

(3)

.....

.....

.....

.....

.....

.....

DO NOT WRITE IN THIS AREA
DO NOT WRITE IN THIS AREA
DO NOT WRITE IN THIS AREA

*(c) A container of gas is at room temperature.

The gas is then heated.

The volume of the container remains the same.

By considering changes in velocities of the gas particles, explain how the temperature increase affects

- the average kinetic energy of the particles
- the pressure the particles exert on the walls of the container.

(6)

.....

.....

.....

.....

.....

.....

.....

.....

.....

.....

.....

.....

.....

.....

.....

(Total for Question 9 = 11 marks)

DO NOT WRITE IN THIS AREA
DO NOT WRITE IN THIS AREA
DO NOT WRITE IN THIS AREA

10 (a) Figure 20 shows a magnet and a coil.

The coil is connected to a sensitive centre-zero ammeter.

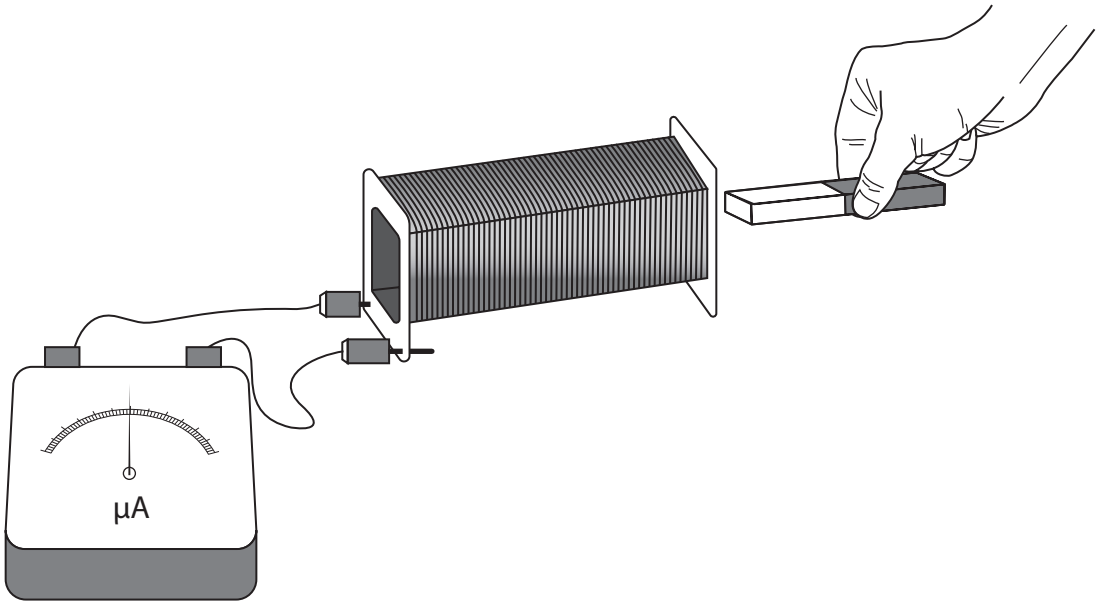

Figure 20

Explain what will be observed on the meter when the magnet is pushed in and pulled out of the coil, repeatedly.

(3)

.....

.....

.....

.....

.....

.....

DO NOT WRITE IN THIS AREA
DO NOT WRITE IN THIS AREA
DO NOT WRITE IN THIS AREA

(b) This question is about a transformer.

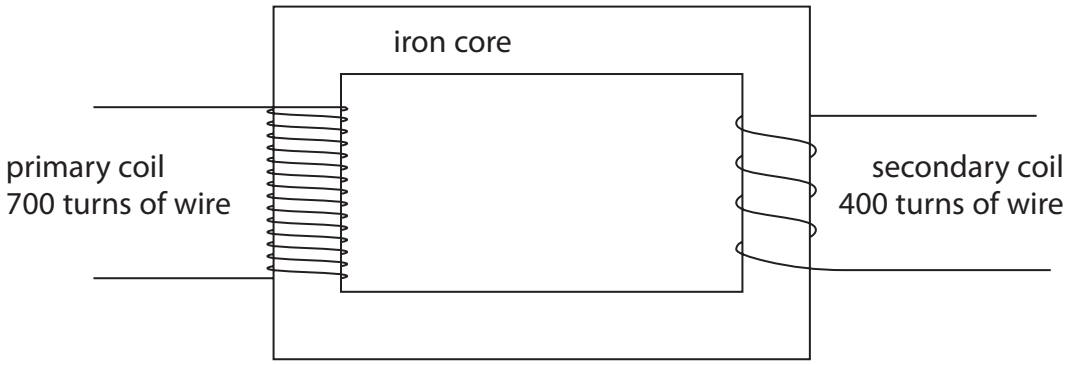

primary voltage = 230 V

secondary current = 1.75 A

Figure 21

Calculate the current in the primary coil.

Use the information given in Figure 21 and equations selected from the list of equations at the end of this paper.

The transformer is 100% efficient.

(3)

current in the primary coil = ... A

DO NOT WRITE IN THIS AREA
DO NOT WRITE IN THIS AREA
DO NOT WRITE IN THIS AREA

*(c) Figure 22 shows how electricity is delivered efficiently from a power station (P) to homes (T).

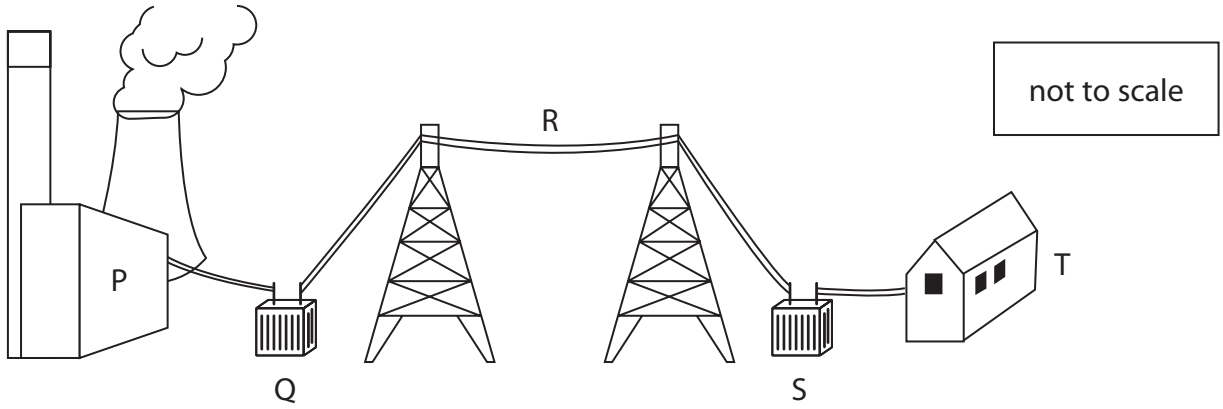

Figure 22

Using Figure 22, explain the stages in the process of delivering electricity efficiently from P to T.

Your answer should include details of the effects that Q, R and S have on efficiency.

(6)

DO NOT WRITE IN THIS AREA
DO NOT WRITE IN THIS AREA
DO NOT WRITE IN THIS AREA

DO NOT WRITE IN THIS AREA
DO NOT WRITE IN THIS AREA
DO NOT WRITE IN THIS AREA

(Total for Question 10 = 12 marks)

TOTAL FOR PAPER = 100 MARKS

BLANK PAGE

DO NOT WRITE IN THIS AREA
DO NOT WRITE IN THIS AREA
DO NOT WRITE IN THIS AREA

DO NOT WRITE IN THIS AREA
DO NOT WRITE IN THIS AREA
DO NOT WRITE IN THIS AREA

BLANK PAGE

Equations

(final velocity)^2 – (initial velocity)^2 = 2 × acceleration × distance $v^2 - u^2 = 2 \times a \times x$
force = change in momentum ÷ time $F = \frac{(mv - mu)}{t}$
energy transferred = current × potential difference × time $E = I \times V \times t$
force on a conductor at right angles to a magnetic field carrying a current = magnetic flux density × current × length $F = B \times I \times l$
$\frac{\text{voltage across primary coil}}{\text{voltage across secondary coil}} = \frac{\text{number of turns in primary coil}}{\text{number of turns in secondary coil}}$ $\frac{V_p}{V_s} = \frac{N_p}{N_s}$
potential difference across primary coil × current in primary coil = potential difference across secondary coil × current in secondary coil $V_p \times I_p = V_s \times I_s$
change in thermal energy = mass × specific heat capacity × change in temperature $\Delta Q = m \times c \times \Delta\theta$
thermal energy for a change of state = mass × specific latent heat $Q = m \times L$
to calculate pressure or volume for gases of fixed mass at constant temperature $P_1 V_1 = P_2 V_2$
energy transferred in stretching = 0.5 × spring constant × (extension)^2 $E = ½ \times k \times x^2$
pressure due to a column of liquid = height of column × density of liquid × gravitational field strength $P = h \times \rho \times g$

DO NOT WRITE IN THIS AREA
DO NOT WRITE IN THIS AREA
DO NOT WRITE IN THIS AREA