Please check the examination details below before entering your candidate information

Candidate surname	Other names

Centre Number | Candidate Number

Pearson Edexcel Level 1/Level 2 GCSE (9–1)

Time 1 hour 45 minutes

Paper reference **1PH0/2F**

Physics

PAPER 2

Foundation Tier

You must have:
Calculator, ruler, Equation Booklet (enclosed)

Total Marks

Instructions

- Use **black** ink or ball-point pen.
- **Fill in the boxes** at the top of this page with your name, centre number and candidate number.
- Answer **all** questions.
- Answer the questions in the spaces provided – *there may be more space than you need.*
- Calculators may be used.
- Any diagrams may NOT be accurately drawn, unless otherwise indicated.
- You must **show all your working out** with **your answer clearly identified** at the **end of your solution**.

Information

- The total mark for this paper is 100.
- The marks for **each** question are shown in brackets – *use this as a guide as to how much time to spend on each question.*
- In questions marked with an **asterisk (*)**, marks will be awarded for your ability to structure your answer logically, showing how the points that you make are related or follow on from each other where appropriate.
- A list of equations is included at the end of this exam paper.

Advice

- Read each question carefully before you start to answer it.
- Try to answer every question.
- Check your answers if you have time at the end.

Turn over

©2022 Pearson Education Ltd.

Pearson

Answer ALL questions. Write your answers in the spaces provided.

Some questions must be answered with a cross in a box ☒. If you change your mind about an answer, put a line through the box ☒ and then mark your new answer with a cross ☒.

1 This question is about electrical circuits.

(a) Draw **one** straight line from each circuit symbol to its description.

(3)

circuit symbol

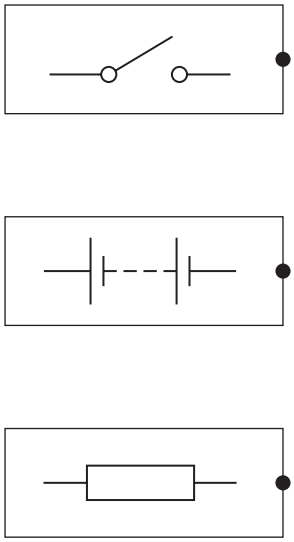

description

- battery
- LED
- switch
- resistor

DO NOT WRITE IN THIS AREA
DO NOT WRITE IN THIS AREA
DO NOT WRITE IN THIS AREA

(b) Figure 1 shows a lamp in a circuit.

The lamp is switched on.

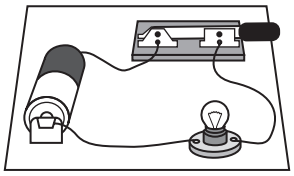

Figure 1

(i) The current in the lamp is a flow of

(1)

☒ **A** atoms

☒ **B** electrons

☒ **C** neutrons

☒ **D** protons

(ii) The current in the lamp is 0.21 A.

Calculate the charge that flows through the lamp in a time of 300 s.

State the unit of charge.

Use the equation

$$\text{charge} = \text{current} \times \text{time}$$

(3)

charge = ... unit .....

(Total for Question 1 = 7 marks)

DO NOT WRITE IN THIS AREA
DO NOT WRITE IN THIS AREA
DO NOT WRITE IN THIS AREA

2 (a) Figure 2 shows four items of equipment that can be used in investigations.

In which of these does a force cause rotation?

(1)

spring balance ☒ **A**

plotting compass ☒ **B**

thermometer ☒ **C**

variable resistor ☒ **D**

Figure 2

(b) Figure 3 shows a force, F, acting on a ruler.

The ruler has a pivot at one end.

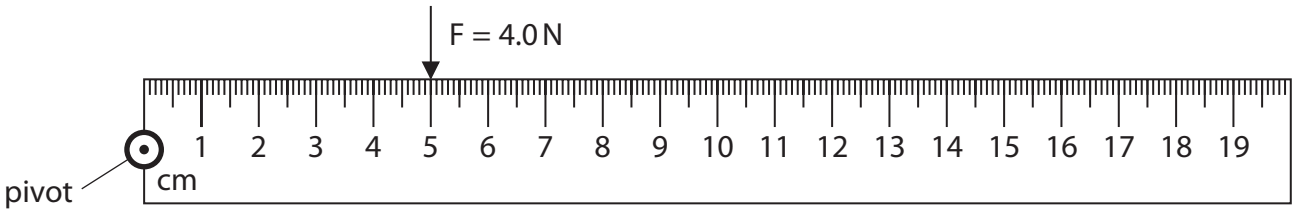

Figure 3

Calculate the moment of the force, F, around the pivot.

Give your answer in units of Nm.

Use the equation

moment of a force = force × distance from pivot

(2)

moment = ... Nm

P 7 0 8 0 7 A 0 4 4 0

DO NOT WRITE IN THIS AREA
DO NOT WRITE IN THIS AREA
DO NOT WRITE IN THIS AREA

(c) A 20 cm ruler has a pivot at its centre.

The ruler is balanced when no forces act on the ruler.

Figure 4 shows two forces, Y and Z, acting on the ruler.

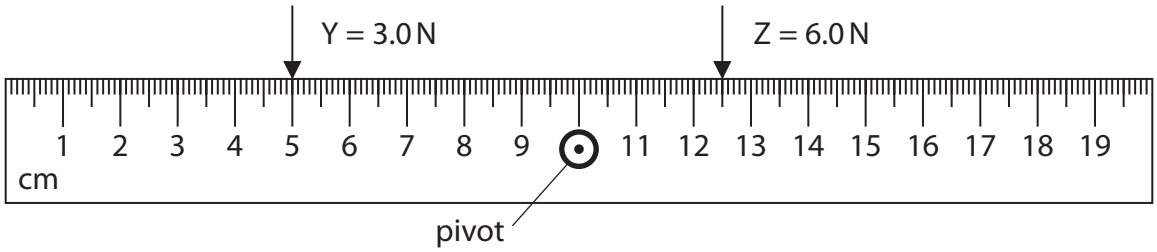

Figure 4

Use the principle of moments to show that the ruler in Figure 4 is balanced.

(2)

.....

.....

.....

.....

DO NOT WRITE IN THIS AREA
DO NOT WRITE IN THIS AREA
DO NOT WRITE IN THIS AREA

(d) Figure 5 shows an arrangement of three gears, P, Q and R.

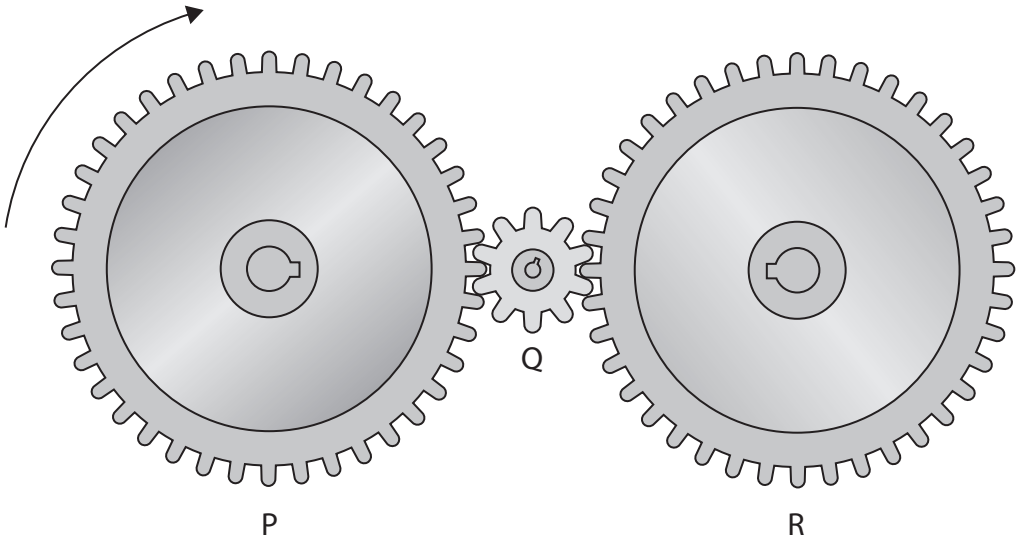

Figure 5

P and R have the same number of teeth.

P rotates in the direction shown.

State how the speed **and** direction of rotation of R compare with the speed and direction of rotation of P.

(2)

speed

.....

.....

direction

.....

.....

(Total for Question 2 = 7 marks)

DO NOT WRITE IN THIS AREA
DO NOT WRITE IN THIS AREA
DO NOT WRITE IN THIS AREA

DO NOT WRITE IN THIS AREA
DO NOT WRITE IN THIS AREA
DO NOT WRITE IN THIS AREA

3 (a) Figure 6 shows helium gas inside a container.

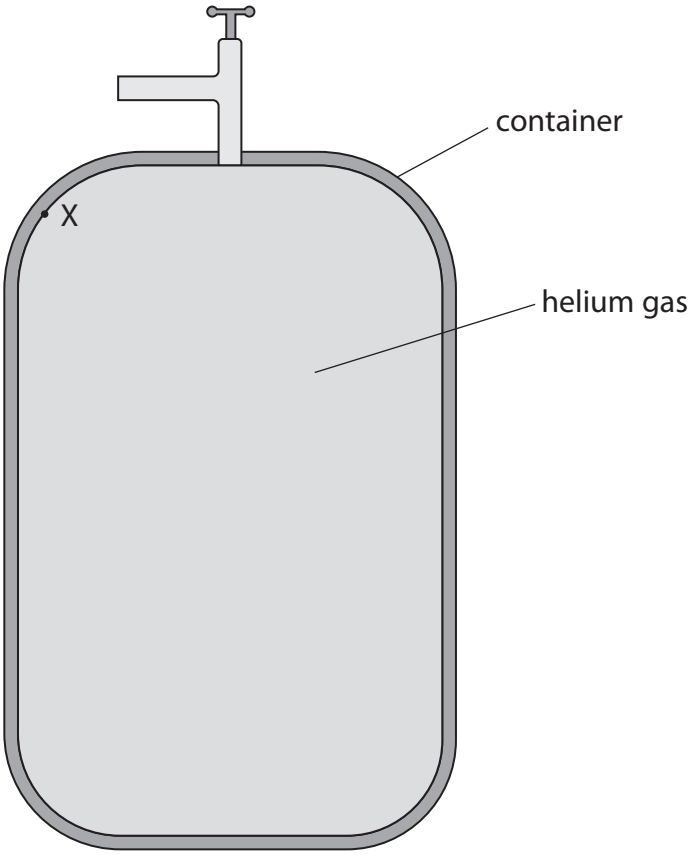

Figure 6

(i) Draw an arrow on Figure 6 to show the direction of the force due to the helium gas, at the point labelled X.

(1)

(ii) Explain, in terms of particles, why the helium gas exerts a force on the sides of the container.

(2)

.....

.....

.....

.....

(b) The container of helium is moved from a cold room to a warmer room.

State the effect of an increase in temperature on the helium gas particles inside the container.

(1)

.....

.....

(c) A fixed mass of helium gas is compressed into a container, with no change in temperature.

The table in Figure 7 shows the pressure P_1 and volume V_1 before the gas is compressed, and the volume V_2 after the gas is compressed.

	pressure in kPa	**volume in m³**
before the gas is compressed	$P_1 = 105$	$V_1 = 2.3$
after the gas is compressed	$P_2 =$	$V_2 = 0.20$

Figure 7

(i) Calculate the pressure P_2 after the gas is compressed.

(2)

Use the equation

$$P_2 = \frac{P_1 \times V_1}{V_2}$$

pressure P_2 = ... kPa

DO NOT WRITE IN THIS AREA
DO NOT WRITE IN THIS AREA
DO NOT WRITE IN THIS AREA

(ii) A shop sells the container of helium gas shown in Figure 8.

The container of helium gas can be used to fill party balloons.

Figure 8

A filled party balloon has a volume of 0.07 m^3 at a pressure of 105 kPa.

The shop claims that you can fill at least 30 party balloons using the gas from the container.

Comment on the shop's claim.

Use information about the volume of the gas at a pressure of 105 kPa as shown in the table in Figure 7.

(3)

.....

.....

.....

.....

(Total for Question 3 = 9 marks)

DO NOT WRITE IN THIS AREA
DO NOT WRITE IN THIS AREA
DO NOT WRITE IN THIS AREA

BLANK PAGE

DO NOT WRITE IN THIS AREA
DO NOT WRITE IN THIS AREA
DO NOT WRITE IN THIS AREA

4 (a) A teacher prepares some equipment to demonstrate electromagnetism.
Figure 9 shows the equipment.

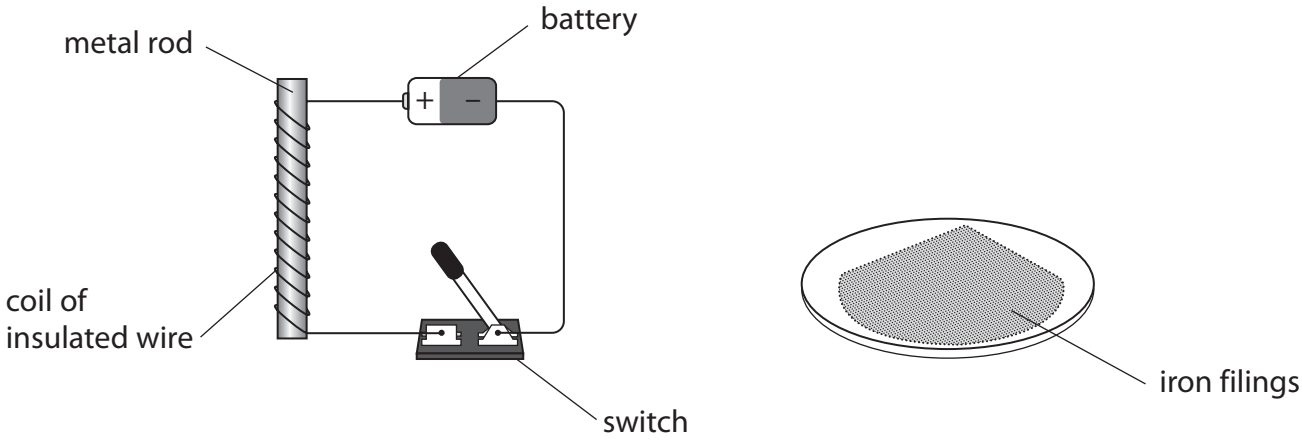

Figure 9

The teacher wants to show that iron filings

- are picked up by the metal rod when the switch is closed
- fall off the metal rod when the switch is opened again.

(i) Suggest a suitable metal for the rod.

(1)

.....

(ii) Give **two** reasons for your choice.

(2)

1 .....

.....

2 .....

.....

DO NOT WRITE IN THIS AREA
DO NOT WRITE IN THIS AREA
DO NOT WRITE IN THIS AREA

(b) A student's mobile phone has an app to measure a magnetic field.

The student places the phone on a table and rotates the phone until it is pointing north.

There are no magnets near to the phone.

Figure 10 shows the display on the screen of the phone.

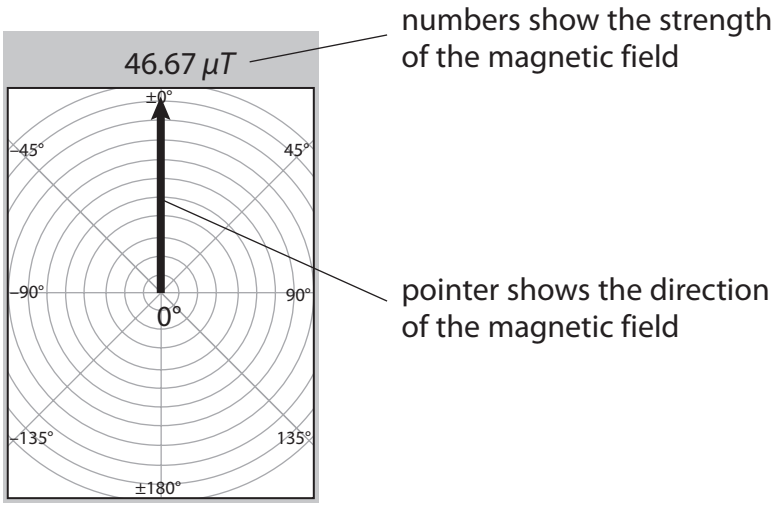

(Source: adapted from MGS Lite app for iPhone)

Figure 10

(i) State why the strength of the magnetic field shown is not zero.

(1)

.....

.....

DO NOT WRITE IN THIS AREA
DO NOT WRITE IN THIS AREA
DO NOT WRITE IN THIS AREA

The student places a magnet near to the phone on the table.

Figure 11 shows the magnet and the new display on the screen.

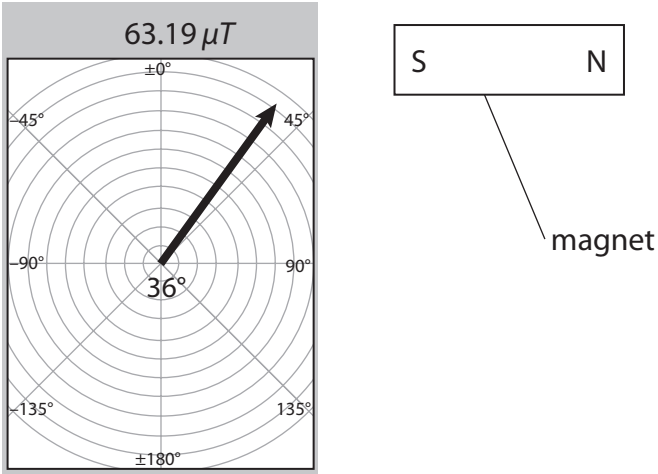

(Source: adapted from MGS Lite app for iPhone)

Figure 11

(ii) State **two** changes in the magnetic field measured by the phone from Figure 10 to Figure 11.

(2)

1 .....

.....

2 .....

.....

(iii) Describe how the student could use the mobile phone to investigate the strength of the magnetic field at different distances from the magnet.

(3)

.....

.....

.....

.....

.....

(Total for Question 4 = 9 marks)

DO NOT WRITE IN THIS AREA
DO NOT WRITE IN THIS AREA
DO NOT WRITE IN THIS AREA

5 (a) An electric water pump is powered by the 230 V mains supply.

Figure 12 shows the inside of the plug on the cable to the pump.

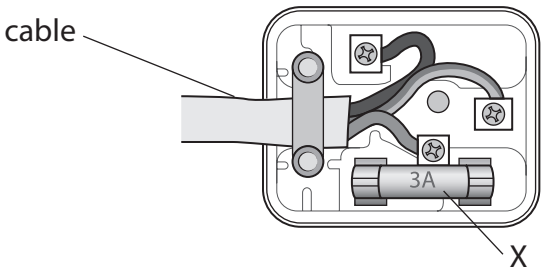

Figure 12

(i) One wire in the plug is the earth wire.

The other two wires are

(1)

☒ **A** live and negative

☒ **B** live and neutral

☒ **C** positive and negative

☒ **D** positive and neutral

(ii) Describe the purpose of the component labelled X.

(2)

.....

.....

.....

.....

DO NOT WRITE IN THIS AREA
DO NOT WRITE IN THIS AREA
DO NOT WRITE IN THIS AREA

(b) The 230 V mains supply transfers 9000 J of energy to the pump motor in 1 minute.

Calculate the current in the pump motor.

Use the equation

$$I = \frac{E}{V \times t}$$

(3)

current = ... A

DO NOT WRITE IN THIS AREA
DO NOT WRITE IN THIS AREA
DO NOT WRITE IN THIS AREA

(c) The system transfers 8400 J of useful kinetic energy to the water passing through the pump in 1 minute.

Figure 13 shows a diagram of the energy transfers.

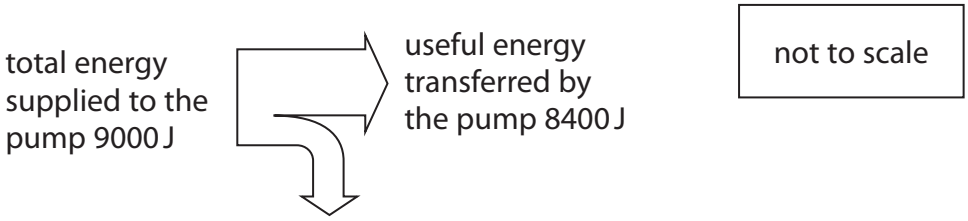

Figure 13

(i) Explain why the useful energy transferred to the water is different from the total energy supplied to the pump.

(2)

.....

.....

.....

.....

(ii) Calculate the efficiency of the pump.

Use the equation

$$\text{efficiency} = \frac{\text{useful energy transferred by the pump}}{\text{total energy supplied to the pump}}$$

(2)

efficiency = ...

(Total for Question 5 = 10 marks)

DO NOT WRITE IN THIS AREA
DO NOT WRITE IN THIS AREA
DO NOT WRITE IN THIS AREA

6 Three students carry out an investigation to determine their powers when running up stairs.

(a) Figure 14 shows a diagram of the stairs with four distances, A, B, C and D, marked.

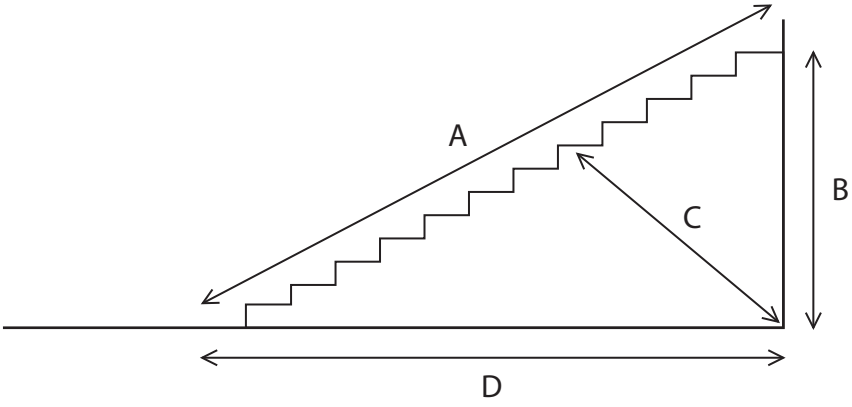

Figure 14

The students need to calculate the work done against gravity.

Which distance should be used in the calculation?

(1)

☒ **A** A

☒ **B** B

☒ **C** C

☒ **D** D

DO NOT WRITE IN THIS AREA
DO NOT WRITE IN THIS AREA
DO NOT WRITE IN THIS AREA

(b) They take turns to run up the stairs and use a stopwatch to measure the time taken.

The students estimate their own weight.

Figure 15 shows a table of their results.

The table is not complete.

student	student estimate of weight in N	distance in m	work done	time taken in s	power in W
A	550	4.0	2200	5.0	440
B		4.0	1960	4.5	436
C	510	4.0	2040		425

Figure 15

(i) State the unit for work done.

(1)

unit for work done is .....

(ii) Use the data for student B to calculate his estimated weight.

(2)

weight = ... N

(iii) Use the data for student C to calculate the time she takes.

(2)

time taken = ... s

(iv) Use the data for all three students to calculate the average power of the students.

(2)

average power = ... W

DO NOT WRITE IN THIS AREA
DO NOT WRITE IN THIS AREA
DO NOT WRITE IN THIS AREA

(c) Identify a significant source of error in the investigation and state how this error can be reduced.

(2)

source of error

.....

.....

can be reduced by

.....

.....

(Total for Question 6 = 10 marks)

DO NOT WRITE IN THIS AREA
DO NOT WRITE IN THIS AREA
DO NOT WRITE IN THIS AREA

BLANK PAGE

DO NOT WRITE IN THIS AREA
DO NOT WRITE IN THIS AREA
DO NOT WRITE IN THIS AREA

7 (a) Which of the following shows the electric field around a point charge?

(1)

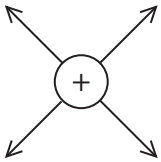

☒ **A**

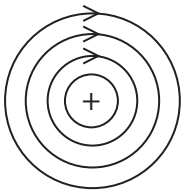

☒ **B**

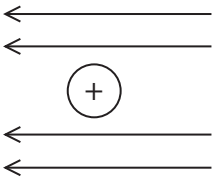

☒ **C**

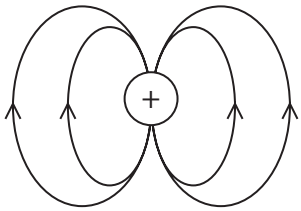

☒ **D**

(b) State **one** way of giving a plastic rod a static electric charge.

(1)

.....

.....

(c) A cleaning company uses an electric sprayer to produce a cloud of disinfectant inside a bus.

The sprayer gives a negative electric charge to each droplet in the cloud of disinfectant.

(i) The droplets in the cloud of disinfectant have a negative charge because the sprayer

(1)

☒ **A** adds electrons to the droplets

☒ **B** adds protons to the droplets

☒ **C** removes electrons from the droplets

☒ **D** removes protons from the droplets

DO NOT WRITE IN THIS AREA
DO NOT WRITE IN THIS AREA
DO NOT WRITE IN THIS AREA

(ii) Figure 16 shows the shape of the clouds of droplets in the disinfectant from two sprayers.

cloud from sprayer 1 cloud from sprayer 2

Figure 16

Sprayer 1 gives a negative charge to each droplet.

Sprayer 2 does not give any charge to the droplets.

Explain the difference in the shape of the two clouds.

(2)

.....

.....

.....

.....

DO NOT WRITE IN THIS AREA DO NOT WRITE IN THIS AREA DO NOT WRITE IN THIS AREA

(iii) Figure 17 shows a cloud of disinfectant, containing charged droplets, moving towards a seat in the bus.

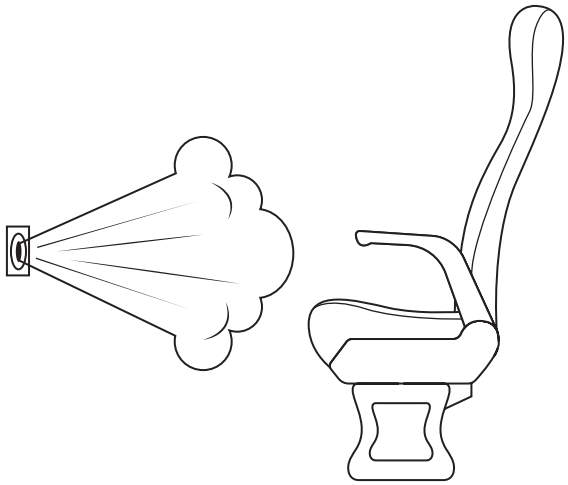

Figure 17

Explain how charging the droplets in the cloud of disinfectant makes sure that every part of the seat is disinfected.

(2)

.....

.....

.....

.....

DO NOT WRITE IN THIS AREA
DO NOT WRITE IN THIS AREA
DO NOT WRITE IN THIS AREA

*(d) Figure 18 shows an aeroplane being refuelled.

The fuel passes through a pipe into fuel tanks in the wings.

The fuel is very flammable.

(Source: © Stanisław Tokarski/123RF)

Figure 18

A build-up of static electric charge can be dangerous while the aeroplane is being refuelled.

Explain

- why the build-up of static electric charge would be dangerous
- how the danger is reduced.

(6)

DO NOT WRITE IN THIS AREA
DO NOT WRITE IN THIS AREA
DO NOT WRITE IN THIS AREA

DO NOT WRITE IN THIS AREA
DO NOT WRITE IN THIS AREA
DO NOT WRITE IN THIS AREA

(Total for Question 7 = 13 marks)

8 (a) Figure 19 shows a lamp connected to a d.c. power supply.

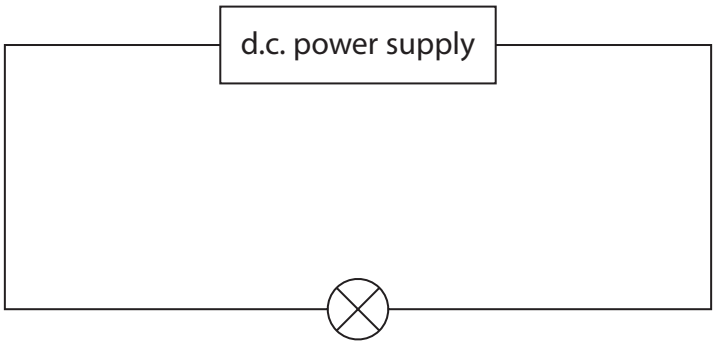

Figure 19

The power supply provides a potential difference (voltage) of 4.5 V.

The current in the lamp is 0.30 A.

(i) Calculate the resistance of the lamp.

Use the equation

$$R = \frac{V}{I}$$

(1)

resistance = ... Ω

(ii) Calculate the power supplied to the lamp.

(2)

power = ... W

DO NOT WRITE IN THIS AREA
DO NOT WRITE IN THIS AREA
DO NOT WRITE IN THIS AREA

(b) Another **identical** lamp is added to the circuit, as shown in Figure 20.

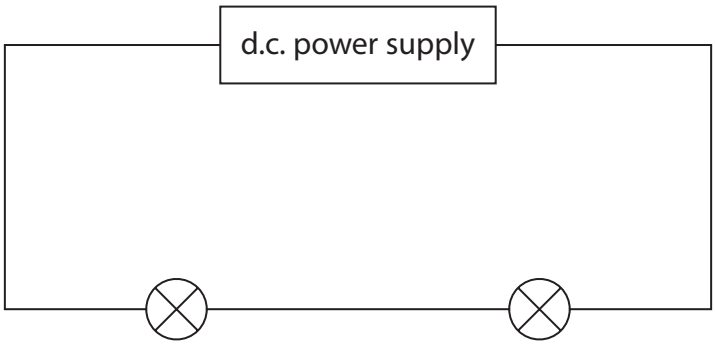

Figure 20

The power supply provides the same potential difference as it provided in the circuit in Figure 19.

State and explain the difference between the brightness of the lamp in Figure 19 and the brightness of a lamp in Figure 20.

(3)

.....

.....

.....

.....

.....

DO NOT WRITE IN THIS AREA
DO NOT WRITE IN THIS AREA
DO NOT WRITE IN THIS AREA

(c) A student is given a low voltage power supply and 1 m of resistance wire.

The student uses these and other pieces of equipment to measure the resistance of just 50 cm of the resistance wire.

Draw a diagram of the circuit that the student should use.

Your circuit diagram should identify the pieces of equipment that the student uses.

(3)

(d) Describe the difference between direct current (d.c.) and alternating current (a.c.) in electrical circuits.

(2)

.....

.....

.....

.....

(Total for Question 8 = 11 marks)

DO NOT WRITE IN THIS AREA
DO NOT WRITE IN THIS AREA
DO NOT WRITE IN THIS AREA

DO NOT WRITE IN THIS AREA
DO NOT WRITE IN THIS AREA
DO NOT WRITE IN THIS AREA

9 (a) When water boils and turns into steam, there are changes in the arrangement of particles and the density.

Which of these shows the changes?

(1)

		space between particles in steam	density of steam
☒	**A**	bigger than in water	greater than water
☒	**B**	bigger than in water	less than water
☒	**C**	smaller than in water	greater than water
☒	**D**	smaller than in water	less than water

(b) Figure 21 shows some water in a measuring cylinder and a lump of iron.

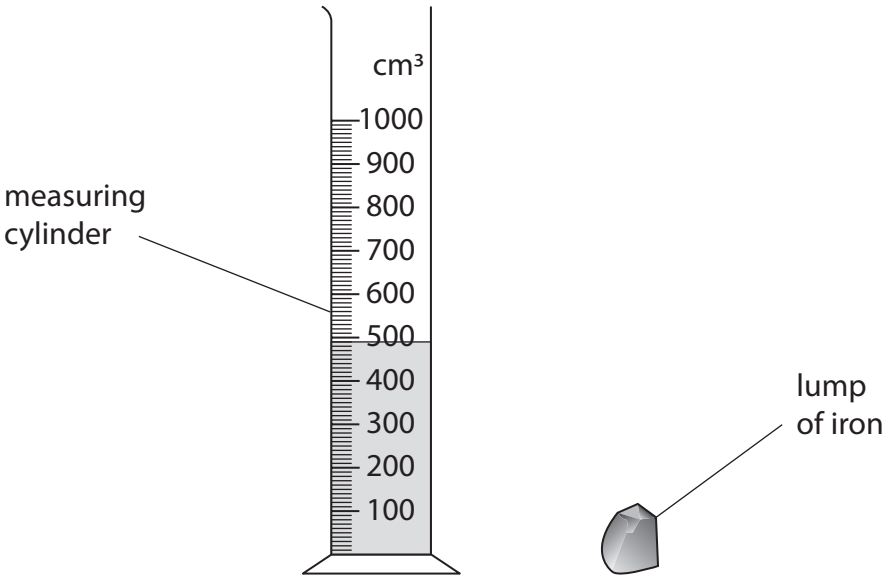

Figure 21

The lump of iron is lowered fully into the water.

The water level in the measuring cylinder rises to 530 cm^3.

The density of iron is 7.9 g / cm^3.

Calculate the mass of the lump of iron.

Use the equation

$$\text{density} = \frac{\text{mass}}{\text{volume}}$$

Give your answer to 2 significant figures.

(4)

mass = ... g

DO NOT WRITE IN THIS AREA
DO NOT WRITE IN THIS AREA
DO NOT WRITE IN THIS AREA

(c) A piece of wood has a similar shape and volume to the lump of iron.

The density of the wood is 0.82 g / cm^3.

The density of water is 1.00 g / cm^3

Explain why the method used in part (b) cannot be used to determine the mass of the piece of wood.

(2)

.....

.....

.....

.....

DO NOT WRITE IN THIS AREA
DO NOT WRITE IN THIS AREA
DO NOT WRITE IN THIS AREA

*(d) A student needs to determine the specific heat capacity of water.

Figure 22 shows some of the equipment the student uses.

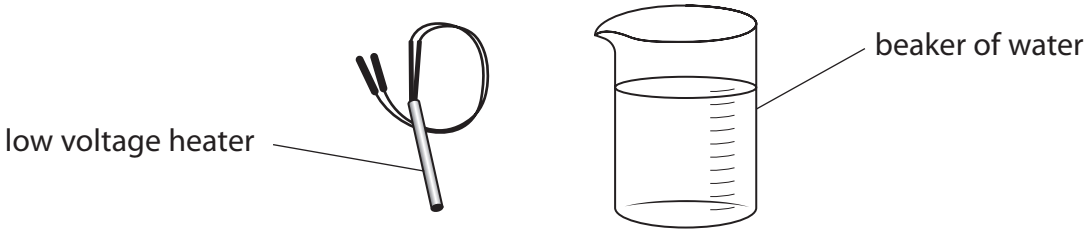

Figure 22

Describe the method the student should use to determine the specific heat capacity of water.

Your description should include, with reasons,

- any other equipment needed
- the measurements needed.

You may draw a diagram if it helps your answer.

(6)

DO NOT WRITE IN THIS AREA
DO NOT WRITE IN THIS AREA
DO NOT WRITE IN THIS AREA

DO NOT WRITE IN THIS AREA
DO NOT WRITE IN THIS AREA
DO NOT WRITE IN THIS AREA

(Total for Question 9 = 13 marks)

10 (a)

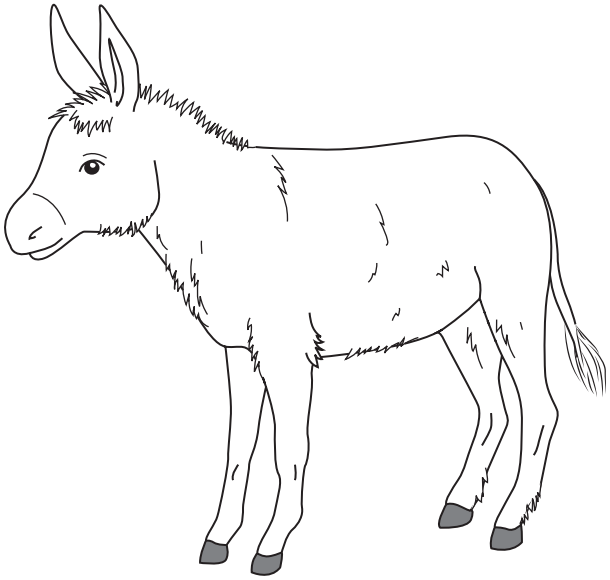

Figure 23

A donkey has a weight of 2500 N.

The area of each hoof is 0.022 m^2.

(i) Calculate the average pressure that the donkey exerts on the ground.

Use the equation

$$\text{pressure} = \frac{\text{force}}{\text{area}}$$

(2)

average pressure = ... Pa

DO NOT WRITE IN THIS AREA
DO NOT WRITE IN THIS AREA
DO NOT WRITE IN THIS AREA

(ii) Figure 24 shows how the shape of a camel's hoof is different from the shape of a donkey's hoof.

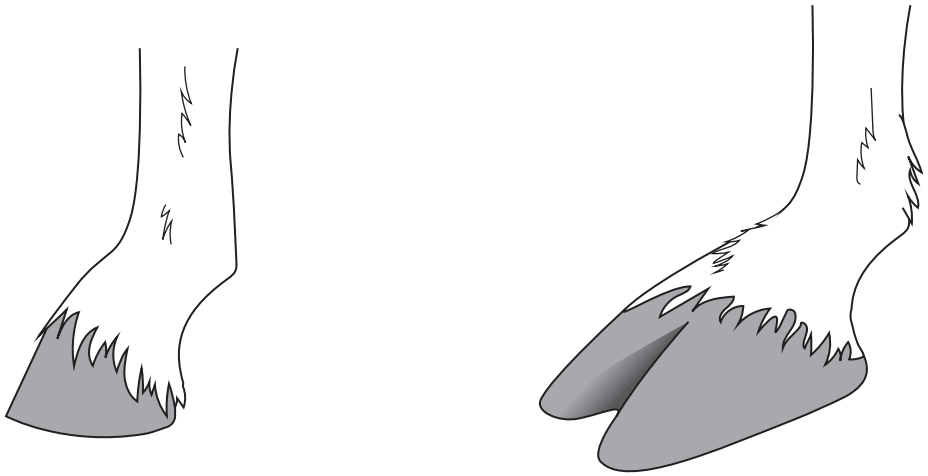

donkey hoof camel hoof

Both diagrams are drawn to the same scale.

Figure 24

The camel and the donkey have the same mass.

Explain how a camel's hoof is a more suitable shape than a donkey's hoof for walking on soft ground.

(2)

.....

.....

.....

DO NOT WRITE IN THIS AREA
DO NOT WRITE IN THIS AREA
DO NOT WRITE IN THIS AREA

(b) A student carries out an investigation to show how pressure varies with depth in water.

A pressure sensor is attached to a rule.

The rule and pressure sensor are lowered into the water in a tank, as shown in Figure 25.

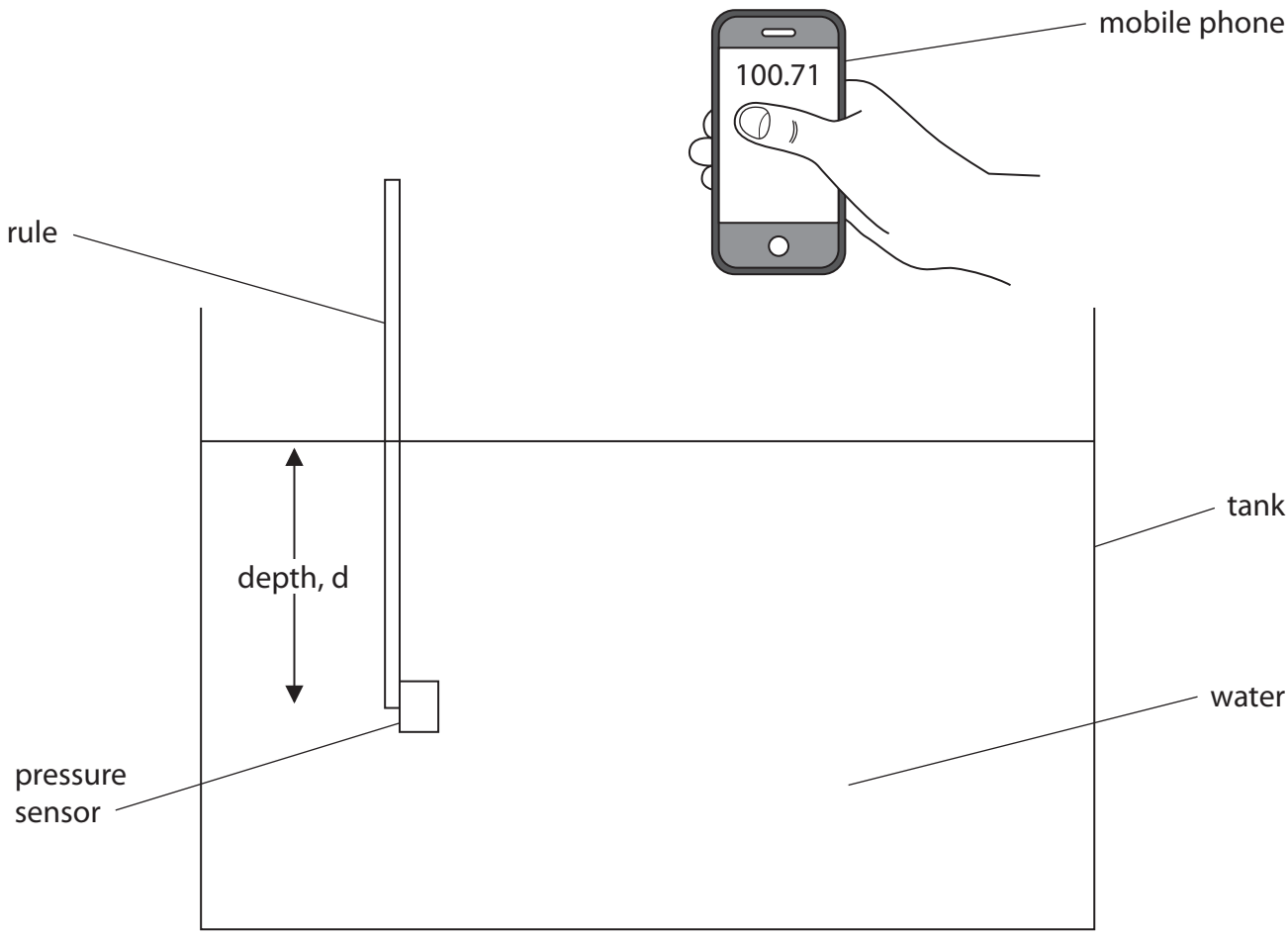

Figure 25

The depth of the pressure sensor below the surface of the water is read from the scale on the rule.

The pressure is displayed on the student's mobile phone which receives a signal from the pressure sensor.

DO NOT WRITE IN THIS AREA
DO NOT WRITE IN THIS AREA
DO NOT WRITE IN THIS AREA

Figure 26 gives some of the readings.

depth in m	pressure in kPa
0.050	99.15
0.100	99.70
0.150	100.15
0.200	100.70
0.250	101.15
0.300	101.70

Figure 26

Figure 27 shows a graph with some of the results plotted, but two of the points are missing.

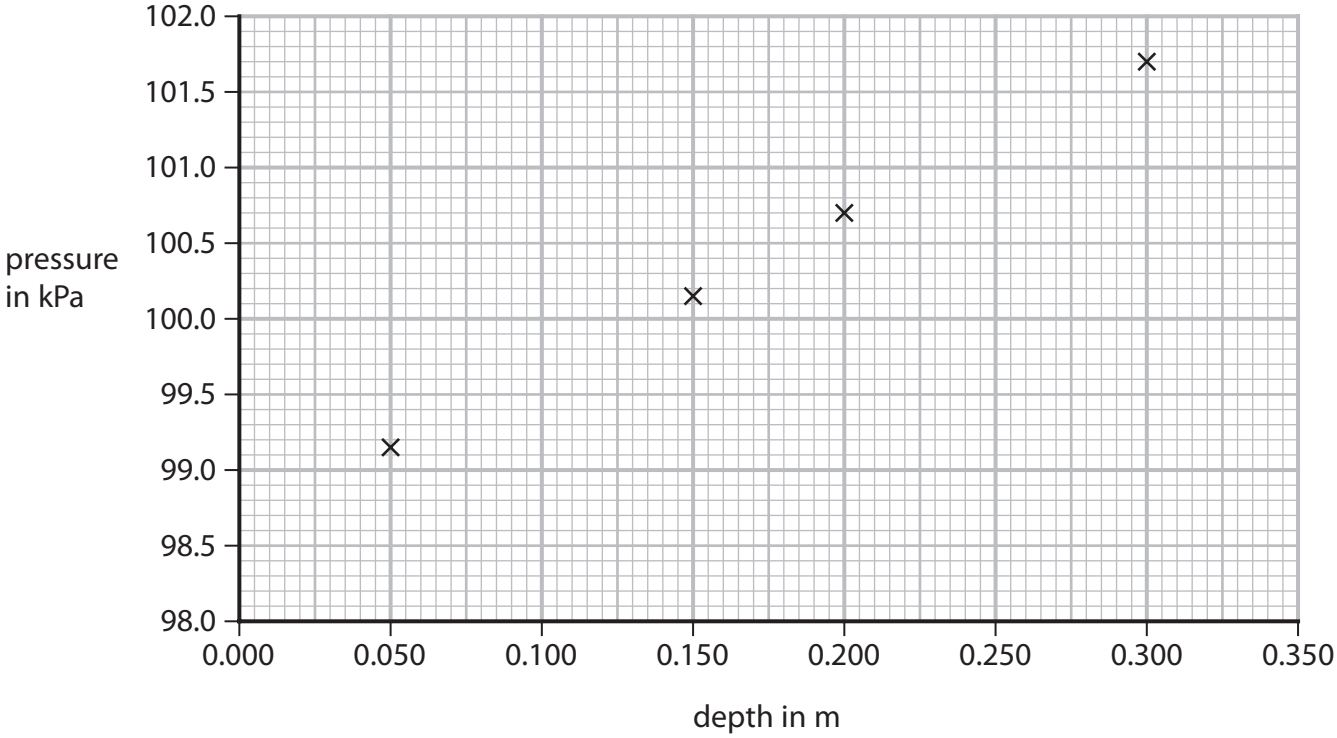

Figure 27

(i) Plot the two missing points on the graph.

(2)

(ii) Draw a line of best fit through the points on the graph.

(1)

DO NOT WRITE IN THIS AREA
DO NOT WRITE IN THIS AREA
DO NOT WRITE IN THIS AREA

(iii) Which of the following equations represents the variation of pressure with depth of water below the surface?

(1)

☒ **A** $y = ax^2 + b$

☒ **B** $y = mx$

☒ **C** $Y = mc - x$

☒ **D** $y = mx + c$

(iv) Use the graph in Figure 27 to predict the pressure at the surface of the water.

(1)

pressure at the surface of the water = ... kPa

(c) The student repeats the investigation in part (b) using seawater and draws a graph of the results.

The seawater is more dense than the water used in part (b).

Compare the graph for seawater with the graph in Figure 27.

(2)

.....

.....

.....

.....

(Total for Question 10 = 11 marks)

TOTAL FOR PAPER = 100 MARKS

DO NOT WRITE IN THIS AREA
DO NOT WRITE IN THIS AREA
DO NOT WRITE IN THIS AREA

DO NOT WRITE IN THIS AREA
DO NOT WRITE IN THIS AREA
DO NOT WRITE IN THIS AREA

BLANK PAGE

Equations

(final velocity)^2 – (initial velocity)^2 = 2 × acceleration × distance $v^2 - u^2 = 2 \times a \times x$
energy transferred = current × potential difference × time $E = I \times V \times t$
potential difference across primary coil × current in primary coil = potential difference across secondary coil × current in secondary coil $V_p \times I_p = V_s \times I_s$
change in thermal energy = mass × specific heat capacity × change in temperature $\Delta Q = m \times c \times \Delta\theta$
thermal energy for a change of state = mass × specific latent heat $Q = m \times L$
to calculate pressure or volume for gases of fixed mass at constant temperature $P_1 V_1 = P_2 V_2$
energy transferred in stretching = 0.5 × spring constant × (extension)^2 $E = ½ \times k \times x^2$

DO NOT WRITE IN THIS AREA
DO NOT WRITE IN THIS AREA
DO NOT WRITE IN THIS AREA