Write your name here

Surname	Other names

Pearson Edexcel
Level 1/Level 2 GCSE (9-1)

Centre Number | Candidate Number

Physics

Paper 2

Higher Tier

Friday 15 June 2018 – Morning
Time: 1 hour 45 minutes

Paper Reference
1PH0/2H

You must have:
Calculator, ruler

Total Marks

Instructions

- Use **black** ink or ball-point pen.
- **Fill in the boxes** at the top of this page with your name, centre number and candidate number.
- Answer **all** questions.
- Answer the questions in the spaces provided – *there may be more space than you need.*
- Calculators may be used.
- Any diagrams may NOT be accurately drawn, unless otherwise indicated.
- You must **show all your working out** with **your answer clearly identified** at the **end of your solution**.

Information

- The total mark for this paper is 100.
- The marks for **each** question are shown in brackets – *use this as a guide as to how much time to spend on each question.*
- In questions marked with an **asterisk (*)**, marks will be awarded for your ability to structure your answer logically showing how the points that you make are related or follow on from each other where appropriate.
- A list of equations is included at the end of this exam paper.

Advice

- Read each question carefully before you start to answer it.
- Try to answer every question.
- Check your answers if you have time at the end.

Turn over ▶

P60468A

©2018 Pearson Education Ltd.

1/1/1/1/1/

P 6 0 4 6 8 A 0 1 3 6

Pearson

Answer ALL questions. Write your answers in the spaces provided.

Some questions must be answered with a cross in a box ☒.
If you change your mind about an answer, put a line through the box ☒ and then mark your new answer with a cross ☒.

1 (a) Figure 1 shows air inside a cylinder with a movable piston.

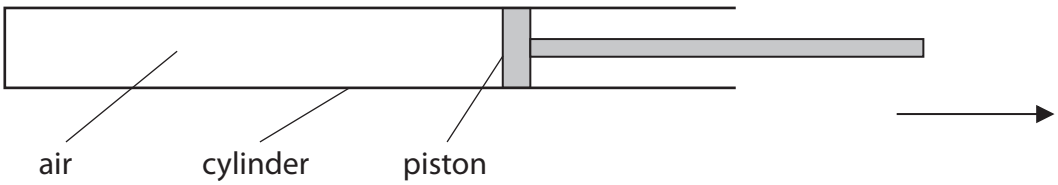

Figure 1

The piston is pulled a little way in the direction of the arrow, but stays inside the cylinder.

Which of these increases?

(1)

☐ **A** The mass of the air inside the cylinder.

☐ **B** The rate at which air particles collide with the walls of the cylinder.

☐ **C** The volume of the air inside the cylinder.

☐ **D** The pressure of the air inside the cylinder.

(b) Figure 2 shows a rubber tube that can be used inside a bicycle tyre.

The tube is inflated with a bicycle pump.

before being inflated after being inflated

Figure 2

DO NOT WRITE IN THIS AREA
DO NOT WRITE IN THIS AREA
DO NOT WRITE IN THIS AREA

(i) The air inside the tube exerts an outward force on the wall of the tube.

State the angle that this outward force makes with the wall of the tube.

(1)

.....

.....

(ii) It takes 4.8 litres of air from the atmosphere to inflate the empty tube to a pressure of 400 000 Pa.

Atmospheric pressure is 100 000 Pa.

Calculate the volume of air inside the tube.

Assume the temperature of the air inside the tube is the same as the temperature of the air outside the tube.

Use an equation selected from the list of equations at the end of this paper.

(3)

volume = ... litres

(iii) When a bicycle pump is used to inflate the tube, the air in the bicycle pump gets warm.

You should ignore any effects of friction in the pump.

Explain why the air in the bicycle pump gets warm.

(2)

.....

.....

.....

.....

(Total for Question 1 = 7 marks)

DO NOT WRITE IN THIS AREA
DO NOT WRITE IN THIS AREA
DO NOT WRITE IN THIS AREA

2 (a) A student uses the apparatus in Figure 3 to determine the specific heat capacity of water.

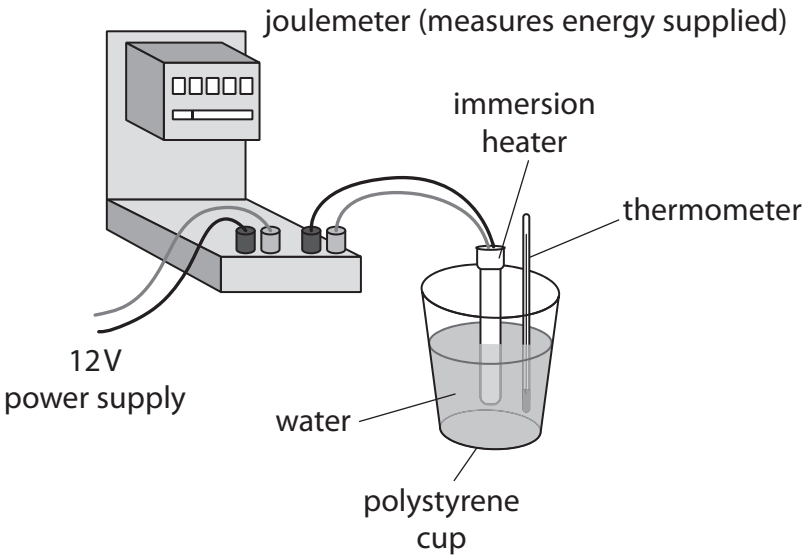

Figure 3

(i) State the measurements needed to calculate the specific heat capacity of water.

(4)

.....

.....

.....

.....

.....

.....

.....

.....

DO NOT WRITE IN THIS AREA
DO NOT WRITE IN THIS AREA
DO NOT WRITE IN THIS AREA

(ii) State **two** ways that the apparatus could be adapted to improve the procedure.

(2)

1 .....

.....

2 .....

.....

(b) The student decides to measure the temperature of the water every minute while it is being heated.

Figure 4 shows a graph of the student's results.

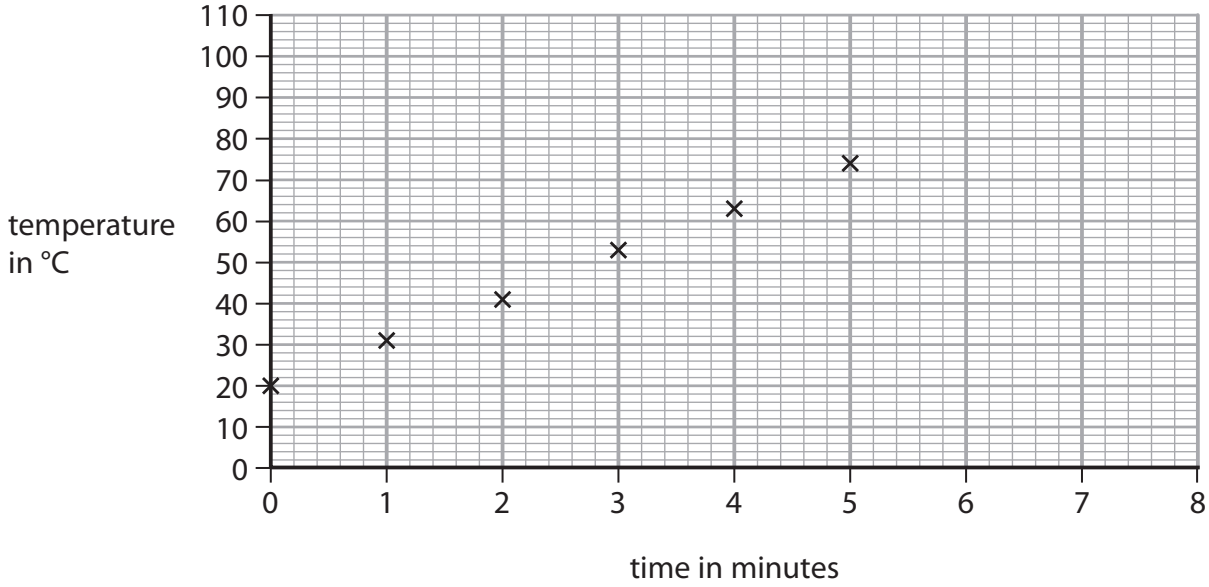

Figure 4

Predict the temperature of the water if the heating continues up to 8 minutes.

(1)

temperature of the water = ... °C

DO NOT WRITE IN THIS AREA
DO NOT WRITE IN THIS AREA
DO NOT WRITE IN THIS AREA

(c) Another student decides to melt some ice.

The student melts 380 g of ice at 0 °C.

The specific latent heat of fusion of ice is 3.34×10^5 J/kg.

Calculate the thermal energy needed to melt the ice.

Select an equation from the list of equations at the end of this paper.

(2)

thermal energy needed = ... J

(Total for Question 2 = 9 marks)

DO NOT WRITE IN THIS AREA
DO NOT WRITE IN THIS AREA
DO NOT WRITE IN THIS AREA

DO NOT WRITE IN THIS AREA
DO NOT WRITE IN THIS AREA
DO NOT WRITE IN THIS AREA

BLANK PAGE

3 A cyclist is riding a bicycle at a steady velocity of 12 m/s.

The cyclist and bicycle have a total mass of 68 kg.

(a) Calculate the kinetic energy of the cyclist and bicycle.

Use the equation

$$KE = \frac{1}{2} \times m \times v^2$$

(2)

kinetic energy = ... J

(b) Describe the energy transfers that happen when the cyclist uses the brakes to stop.

(2)

.....

.....

.....

.....

(c) The cyclist starts to cycle again.

The cyclist does 1600 J of useful work to travel 28 m.

Calculate the average force the cyclist exerts.

(3)

average force = ... N

DO NOT WRITE IN THIS AREA
DO NOT WRITE IN THIS AREA
DO NOT WRITE IN THIS AREA

(d) An athlete uses a training machine in a gym.

The display on the machine shows the time spent on the machine and the amount of energy transferred during a training session.

Figure 5 shows the displays for two different sessions by the same athlete.

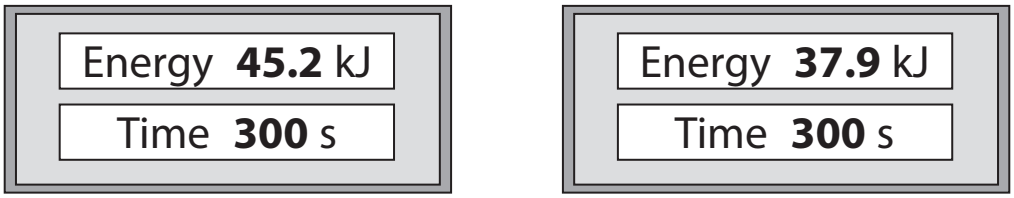

session 1 session 2

Figure 5

Explain what the displays show about the average power of the athlete in each of these two sessions.

(2)

.....

.....

.....

.....

(Total for Question 3 = 9 marks)

DO NOT WRITE IN THIS AREA
DO NOT WRITE IN THIS AREA
DO NOT WRITE IN THIS AREA

4 (a) A student rubs a plastic comb with a dry cloth to give the comb a positive electric charge.

Figure 6 shows the charged plastic comb picking up small pieces of paper.

(Source © GIPhotoStock/SCIENCE PHOTO LIBRARY)

Figure 6

(i) Explain how rubbing the comb with a dry cloth gives the comb a positive electric charge.

(3)

.....

.....

.....

.....

.....

.....

(ii) Explain how the positively-charged plastic comb picks up the small pieces of paper.

(3)

.....

.....

.....

.....

.....

.....

DO NOT WRITE IN THIS AREA
DO NOT WRITE IN THIS AREA
DO NOT WRITE IN THIS AREA

(b) Which of these diagrams shows the shape and direction of the electric field around a positive point charge?

(1)

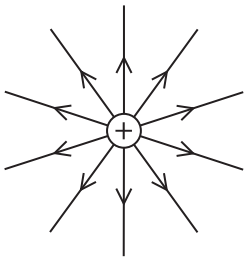

☒ **A**

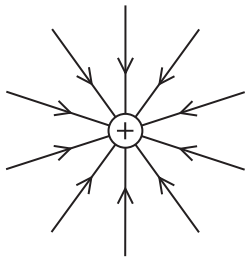

☒ **B**

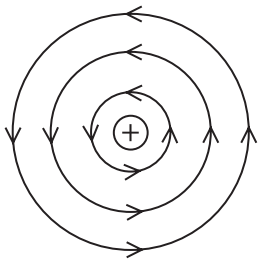

☒ **C**

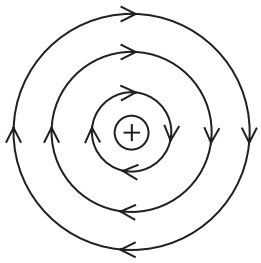

☒ **D**

DO NOT WRITE IN THIS AREA
DO NOT WRITE IN THIS AREA
DO NOT WRITE IN THIS AREA

(c) Figure 7 shows two metal spheres.

Metal sphere A is fixed to a table.
Metal sphere B can be moved.

Metal sphere B is placed at a short distance from metal sphere A.

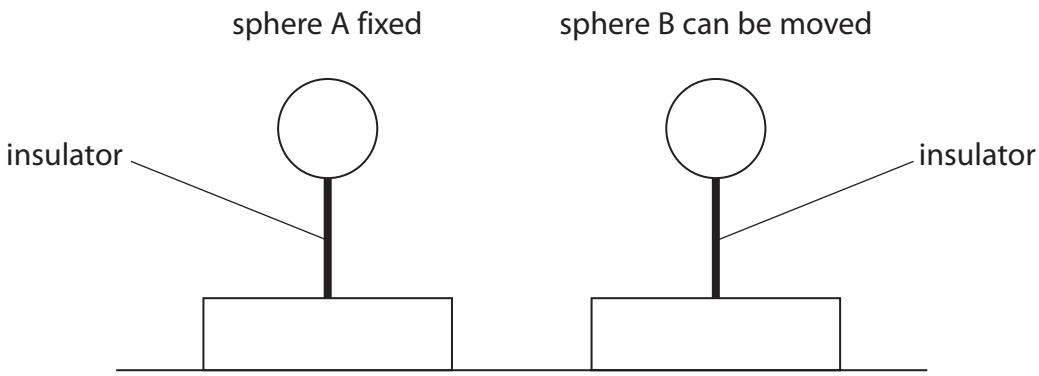

Figure 7

Both spheres are insulated from the table and given a negative charge.

The force between the charged spheres is measured.

(i) Explain, in terms of electric fields, why a force is exerted on sphere B.

(2)

.....

.....

.....

.....

DO NOT WRITE IN THIS AREA
DO NOT WRITE IN THIS AREA
DO NOT WRITE IN THIS AREA

(ii) Sphere B is moved and the force between the spheres is measured at several different distances.

Figure 8 is a graph of force on sphere B against distance between the centres of the spheres.

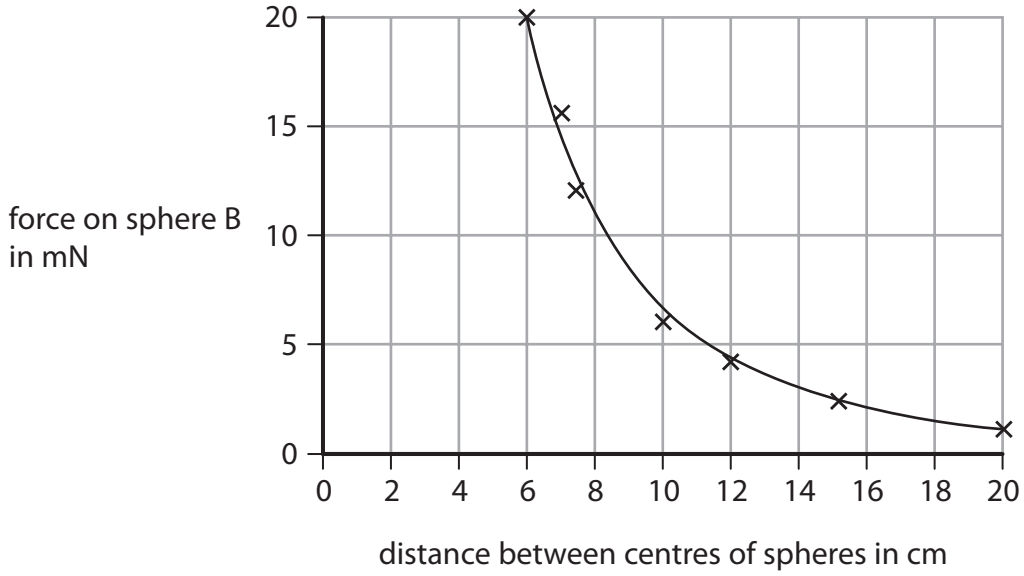

Figure 8

Describe how the force on sphere B varies with the distance between the centres of the spheres.

(2)

.....

.....

.....

.....

(Total for Question 4 = 11 marks)

DO NOT WRITE IN THIS AREA
DO NOT WRITE IN THIS AREA
DO NOT WRITE IN THIS AREA

BLANK PAGE

DO NOT WRITE IN THIS AREA
DO NOT WRITE IN THIS AREA
DO NOT WRITE IN THIS AREA

5 (a) A student has a bar magnet, a piece of iron the same size as the magnet, and some paper clips.

Describe how the student could use these items to demonstrate temporary induced magnetism.

(3)

.....

.....

.....

.....

.....

.....

DO NOT WRITE IN THIS AREA
DO NOT WRITE IN THIS AREA
DO NOT WRITE IN THIS AREA

(b) A student sets up the apparatus shown in Figure 9.

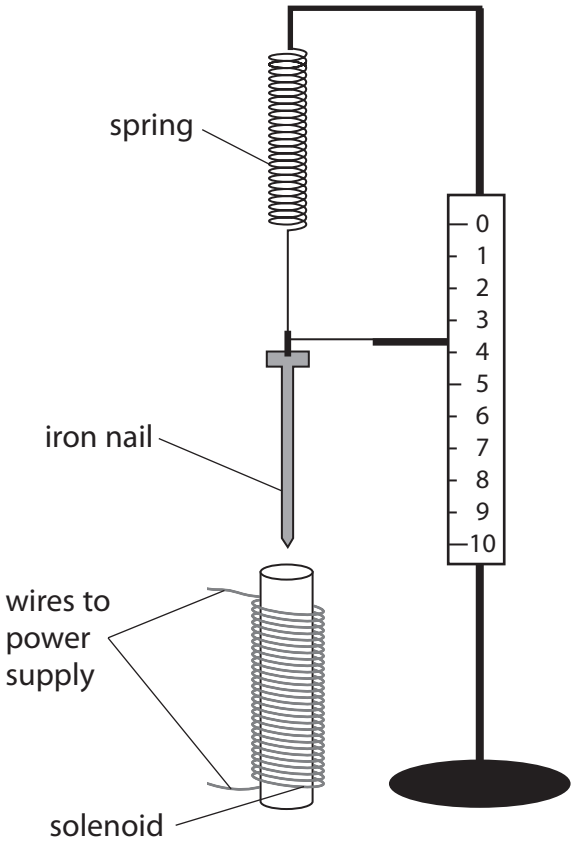

Figure 9

(i) When the current in the solenoid is switched on, the solenoid attracts the iron nail.

Describe how the student could use this apparatus to investigate how the size of the current in the solenoid affects the force of attraction between the solenoid and the iron nail.

(4)

.....

.....

.....

.....

.....

.....

.....

.....

DO NOT WRITE IN THIS AREA
DO NOT WRITE IN THIS AREA
DO NOT WRITE IN THIS AREA

(ii) The spring constant of a different spring is 24 N/m.

The spring is extended from its unstretched length by 12 cm.

Calculate the energy transferred in extending the spring by 12 cm.

Use an equation selected from the list of equations at the end of this paper.

(2)

energy transferred = ... J

(Total for Question 5 = 9 marks)

DO NOT WRITE IN THIS AREA
DO NOT WRITE IN THIS AREA
DO NOT WRITE IN THIS AREA

6 (a) Figure 10 shows an arrangement of gears.

Each gear turns around a fixed axle.

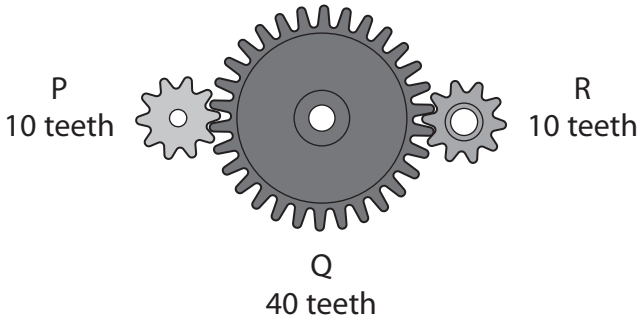

Figure 10

Gear P is turned through one complete revolution per second.

(i) Which of the following describes the motion of gear R?

(1)

		speed (revolutions per second)	direction of rotation
☒	**A**	4	same as P
☒	**B**	1	same as P
☒	**C**	4	opposite to P
☒	**D**	1	opposite to P

DO NOT WRITE IN THIS AREA
DO NOT WRITE IN THIS AREA
DO NOT WRITE IN THIS AREA

(ii) Figure 11 shows the same arrangement with gear R replaced by a rack.

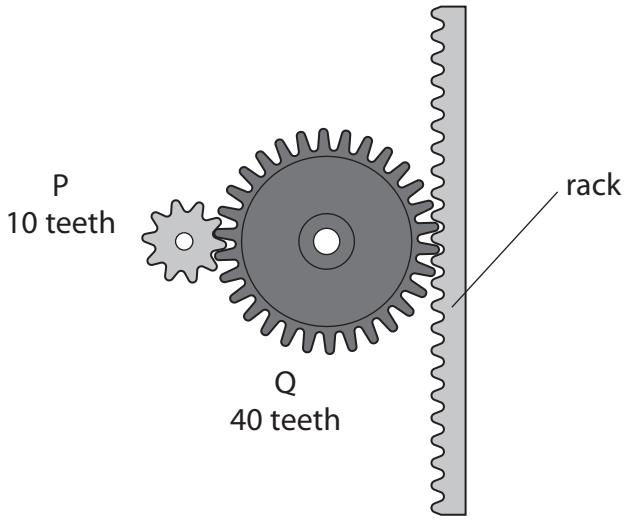

Figure 11

The rack can move up or down when the gears turn.

The teeth on the rack are 2 mm apart.

Calculate how far the rack moves when P turns through to one complete revolution.

(2)

distance = ... mm

DO NOT WRITE IN THIS AREA
DO NOT WRITE IN THIS AREA
DO NOT WRITE IN THIS AREA

(b) Figure 12 shows three toy animals hanging from a rod.

The rod hangs from the ceiling by a string tied to the centre of the rod.

The system is in equilibrium.

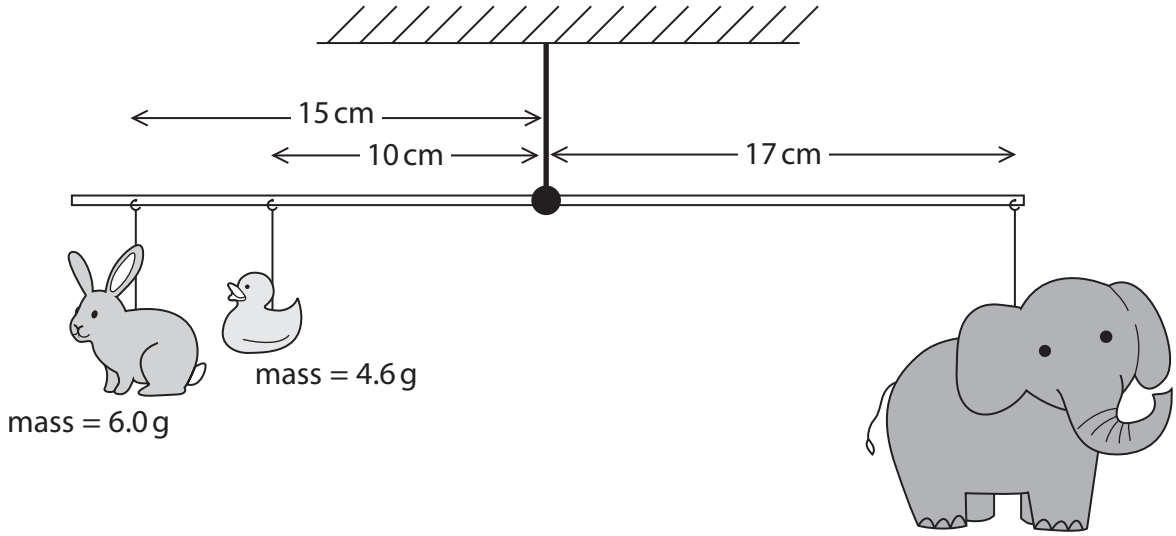

Figure 12

Use the principle of moments to calculate the mass of the toy elephant.

(4)

mass = ... g

DO NOT WRITE IN THIS AREA
DO NOT WRITE IN THIS AREA
DO NOT WRITE IN THIS AREA

(c) Figure 13 shows a diagram of a device for lifting heavy loads.

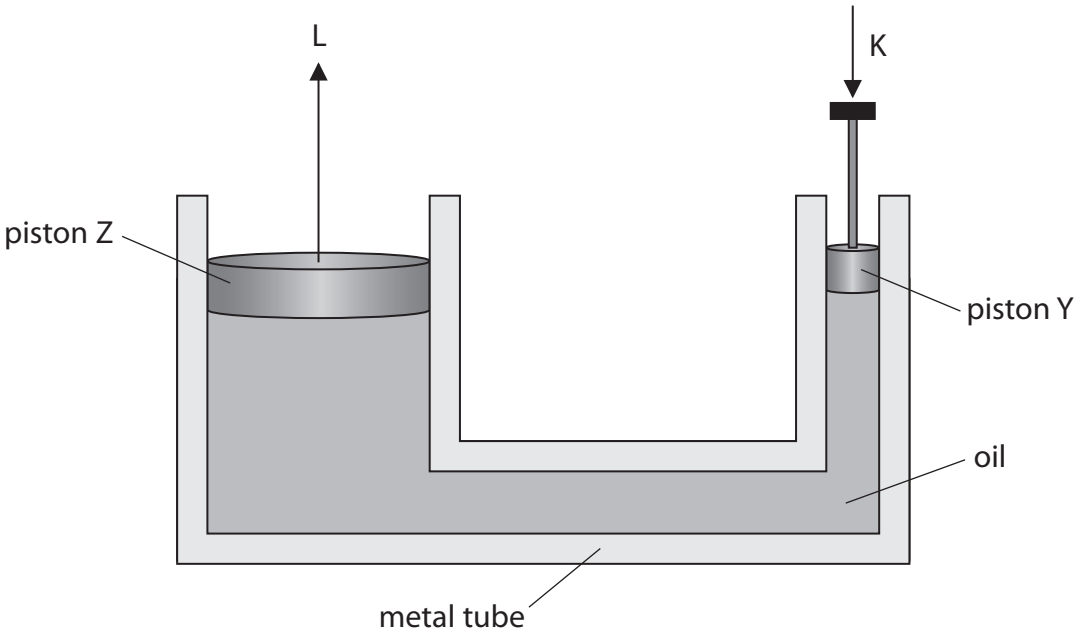

Figure 13

The metal tube is filled with oil.

The piston Y is pushed down with a force K.

This produces a force L on piston Z.

The pressure exerted on the oil by piston Y is the same as the pressure exerted by the oil on piston Z.

Explain the difference between the size of force K and the size of force L.

(3)

.....

.....

.....

.....

.....

.....

(Total for Question 6 = 10 marks)

DO NOT WRITE IN THIS AREA
DO NOT WRITE IN THIS AREA
DO NOT WRITE IN THIS AREA

7 (a) (i) Figure 14 shows the vertical forces on an aeroplane.

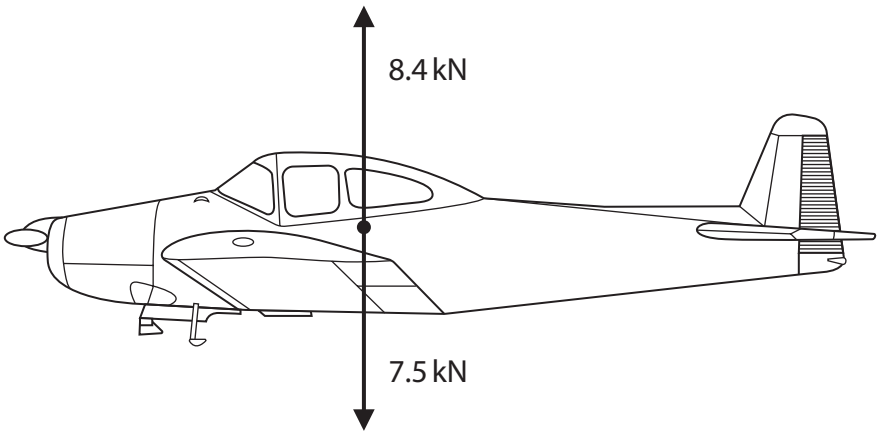

Figure 14

Use information from the diagram to determine the size and direction of the resultant vertical force on the aeroplane.

(2)

size = ... kN, direction is .....

(ii) The aeroplane is descending.

Figure 15 shows a diagram of the resultant vertical and horizontal forces on the aeroplane as it is descending.

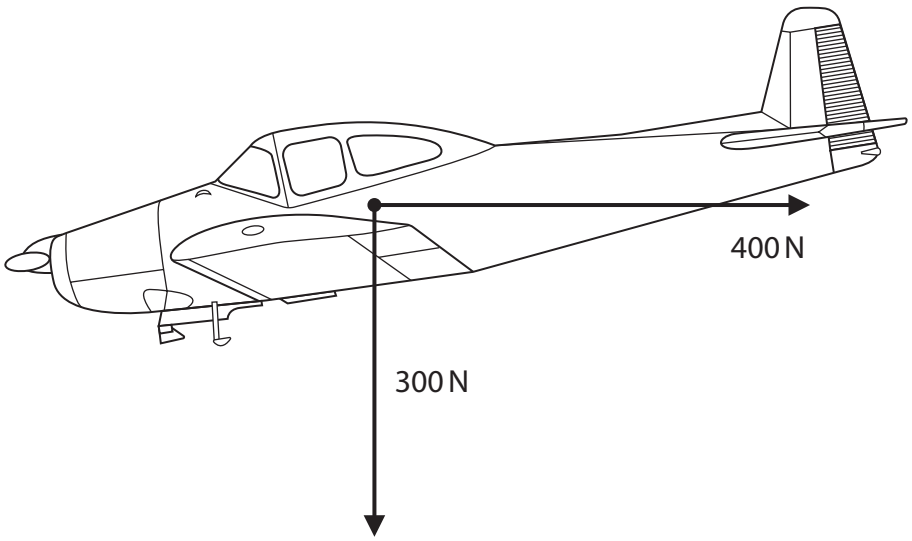

Figure 15

Complete the diagram to show the resultant of these two forces.

(1)

DO NOT WRITE IN THIS AREA
DO NOT WRITE IN THIS AREA
DO NOT WRITE IN THIS AREA

(iii) The mass of the aeroplane is 750 kg.

Calculate the change in gravitational potential energy of the aeroplane as it descends from 1300 m to the ground.

Gravitational field strength (g) = 10 N/kg

(2)

energy = ... J

DO NOT WRITE IN THIS AREA
DO NOT WRITE IN THIS AREA
DO NOT WRITE IN THIS AREA

(b) The aeroplane is powered by an engine that burns fuel.

The fuel supplies a total of 6500 kJ of energy every minute.

The efficiency of the engine is 0.70 (70%).

(i) Calculate the power output of the engine.

Give your answer in kW.

(4)

power = ... kW

(ii) Explain why the efficiency of the engine is less than 1 (100%).

(2)

.....

.....

.....

.....

(Total for Question 7 = 11 marks)

DO NOT WRITE IN THIS AREA
DO NOT WRITE IN THIS AREA
DO NOT WRITE IN THIS AREA

DO NOT WRITE IN THIS AREA
DO NOT WRITE IN THIS AREA
DO NOT WRITE IN THIS AREA

BLANK PAGE

8 (a) A resistor is connected to a power supply.

The potential difference across the resistor is 6.0 V.

(i) Which of these corresponds to a potential difference of 6.0 V?

(1)

☒ **A** 6.0 joules per ohm

☒ **B** 6.0 amps per coulomb

☒ **C** 6.0 joules per coulomb

☒ **D** 6.0 amps per ohm

(ii) The resistor remains connected for a period of time.

The current in the resistor is 200 mA.

A total charge of 42 C flows through the resistor.

Calculate, in minutes, the time taken for this amount of charge to flow through the resistor.

(3)

time = ... minutes

(iii) Calculate the total energy transferred by the 6.0 V power supply when a charge of 42 C flows through the resistor.

(2)

energy = ... J

DO NOT WRITE IN THIS AREA
DO NOT WRITE IN THIS AREA
DO NOT WRITE IN THIS AREA

(b) The resistor becomes warm while there is a current in it.

Explain why the resistor becomes warm.

(2)

.....

.....

.....

.....

.....

(c) Figure 16 shows a cardboard tube with a wire coming out from each end.

Figure 16

There are two 10 ohm resistors inside the cardboard tube.

A potential difference of 6.0 V is connected between P and Q.

There is a current of 1.2 A in the wires.

Deduce how the resistors have been arranged inside the cardboard tube.

(3)

.....

.....

.....

.....

.....

.....

(Total for Question 8 = 11 marks)

DO NOT WRITE IN THIS AREA
DO NOT WRITE IN THIS AREA
DO NOT WRITE IN THIS AREA

9 (a) Which of these could be the output for a dynamo?

(1)

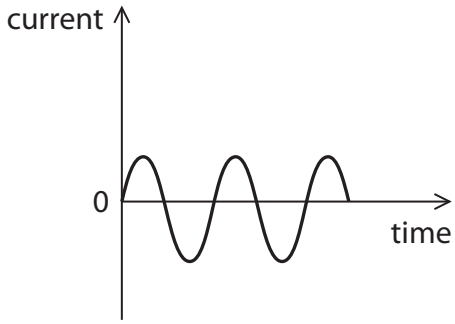

☒ **A**

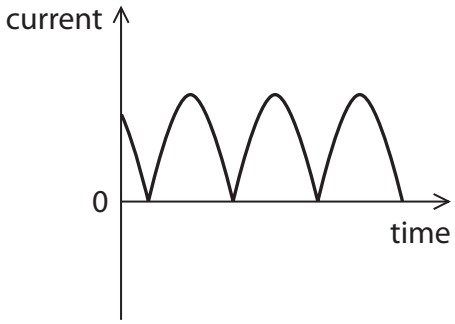

☒ **B**

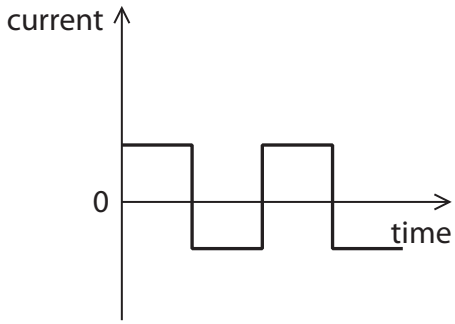

☒ **C**

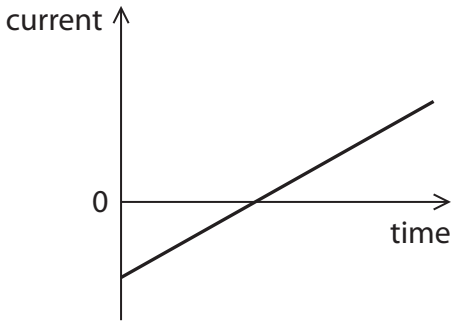

☒ **D**

(b) (i) Figure 17 shows the output from a battery.

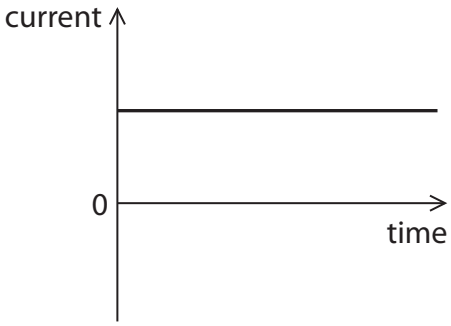

Figure 17

Explain why a transformer will not work with the input current as shown in Figure 17.

(2)

.....

.....

.....

.....

DO NOT WRITE IN THIS AREA
DO NOT WRITE IN THIS AREA
DO NOT WRITE IN THIS AREA

(ii) A transformer has 30 turns on the primary coil and 150 turns on the secondary coil.

A potential difference of 25 V is applied across the primary coil.

Calculate the potential difference across the secondary coil.

Use an equation selected from the list of equations at the end of this paper.

(3)

potential difference = ... V

DO NOT WRITE IN THIS AREA
DO NOT WRITE IN THIS AREA
DO NOT WRITE IN THIS AREA

*(c) High voltage transmission cables and transformers are used in the national grid.

Explain how using high voltage transmission cables and transformers allows the distribution of electrical power around the United Kingdom to be as efficient as possible.

Refer to the following equations in your answer.

$$P = I^2 \times R$$

$$V_p \times I_p = V_s \times I_s$$

(6)

.....

.....

.....

.....

.....

.....

.....

.....

.....

.....

.....

.....

.....

.....

.....

(Total for Question 9 = 12 marks)

DO NOT WRITE IN THIS AREA
DO NOT WRITE IN THIS AREA
DO NOT WRITE IN THIS AREA

DO NOT WRITE IN THIS AREA
DO NOT WRITE IN THIS AREA
DO NOT WRITE IN THIS AREA

BLANK PAGE

10 (a) Figure 18 shows identical filament lamps connected together to a 12 V power supply.

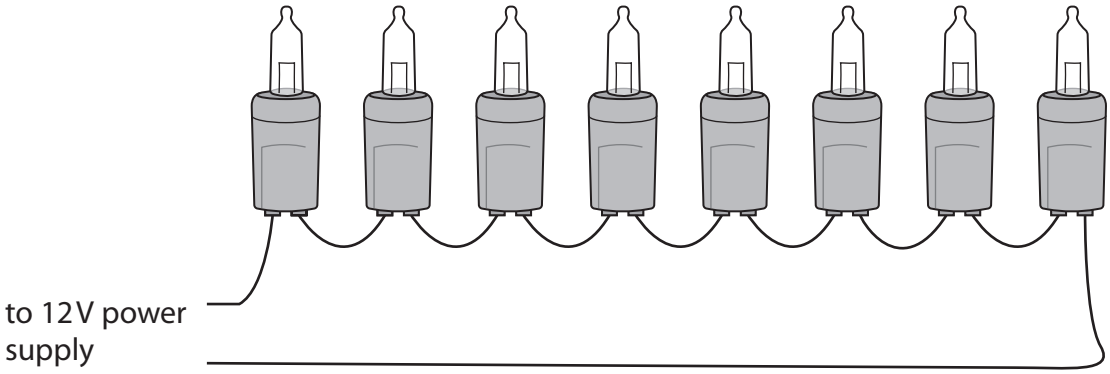

Figure 18

(i) Calculate the potential difference across each lamp.

(1)

potential difference = ... V

(ii) The power output of each lamp is 0.75 W

Calculate the resistance of each lamp.

(4)

resistance = ... Ω

DO NOT WRITE IN THIS AREA
DO NOT WRITE IN THIS AREA
DO NOT WRITE IN THIS AREA

*(b) Explain, with the aid of a circuit diagram, the method a student could use to investigate how the resistance of a single lamp changes with the potential difference across the lamp.

(6)

.....

.....

.....

.....

.....

.....

.....

.....

.....

.....

.....

.....

.....

.....

(Total for Question 10 = 11 marks)

TOTAL FOR PAPER = 100 MARKS

DO NOT WRITE IN THIS AREA
DO NOT WRITE IN THIS AREA
DO NOT WRITE IN THIS AREA

Equations

(final velocity)^2 – (initial velocity)^2 = 2 × acceleration × distance $v^2 - u^2 = 2 \times a \times x$
force = change in momentum ÷ time $F = \frac{(mv - mu)}{t}$
energy transferred = current × potential difference × time $E = I \times V \times t$
force on a conductor at right angles to a magnetic field carrying a current = magnetic flux density × current × length $F = B \times I \times l$
$\frac{\text{voltage across primary coil}}{\text{voltage across secondary coil}} = \frac{\text{number of turns in primary coil}}{\text{number of turns in secondary coil}}$ $\frac{V_p}{V_s} = \frac{N_p}{N_s}$
potential difference across primary coil × current in primary coil = potential difference across secondary coil × current in secondary coil $V_p \times I_p = V_s \times I_s$
change in thermal energy = mass × specific heat capacity × change in temperature $\Delta Q = m \times c \times \Delta\theta$
thermal energy for a change of state = mass × specific latent heat $Q = m \times L$
to calculate pressure or volume for gases of fixed mass at constant temperature $P_1 V_1 = P_2 V_2$
energy transferred in stretching = 0.5 × spring constant × (extension)^2 $E = ½ \times k \times x^2$
pressure due to a column of liquid = height of column × density of liquid × gravitational field strength $P = h \times \rho \times g$

DO NOT WRITE IN THIS AREA
DO NOT WRITE IN THIS AREA
DO NOT WRITE IN THIS AREA

DO NOT WRITE IN THIS AREA
DO NOT WRITE IN THIS AREA
DO NOT WRITE IN THIS AREA

BLANK PAGE

BLANK PAGE

Every effort has been made to contact copyright holders to obtain their permission for the use of copyright material. Pearson Education Ltd. will, if notified, be happy to rectify any errors or omissions and include any such rectifications in future editions.

DO NOT WRITE IN THIS AREA
DO NOT WRITE IN THIS AREA
DO NOT WRITE IN THIS AREA