Write your name here

Surname	Other names

Pearson Edexcel
Level 1/Level 2 GCSE (9-1)

Centre Number | Candidate Number

Physics
Paper 1

Foundation Tier

Wednesday 23 May 2018 – Afternoon
Time: 1 hour 45 minutes

Paper Reference
1PH0/1F

You must have:
Calculator, ruler

Total Marks

Instructions

- Use **black** ink or ball-point pen.
- **Fill in the boxes** at the top of this page with your name, centre number and candidate number.
- Answer **all** questions.
- Answer the questions in the spaces provided – *there may be more space than you need.*
- Calculators may be used.
- Any diagrams may NOT be accurately drawn, unless otherwise indicated.
- You must **show all your working out** with **your answer clearly identified** at the **end of your solution**.

Information

- The total mark for this paper is 100.
- The marks for **each** question are shown in brackets – *use this as a guide as to how much time to spend on each question.*
- In questions marked with an asterisk (*), marks will be awarded for your ability to structure your answer logically showing how the points that you make are related or follow on from each other where appropriate.
- A list of equations is included at the end of this exam paper.

Advice

- Read each question carefully before you start to answer it.
- Try to answer every question.
- Check your answers if you have time at the end.

Turn over ▶

P60465RA

©2018 Pearson Education Ltd.

1/1/1/1/1/C2/1

P 6 0 4 6 5 R A 0 1 3 2

Pearson

Answer ALL questions. Write your answers in the spaces provided.

Some questions must be answered with a cross in a box ☒.
If you change your mind about an answer, put a line through the box ☒ and then mark your new answer with a cross ☒.

1 (a) Which of these speeds would be normal for a person walking?

(1)

☐ **A** 0.1 m/s

☐ **B** 1.0 m/s

☐ **C** 10 m/s

☐ **D** 100 m/s

(b) Figure 1 shows a block hanging from a spring balance.

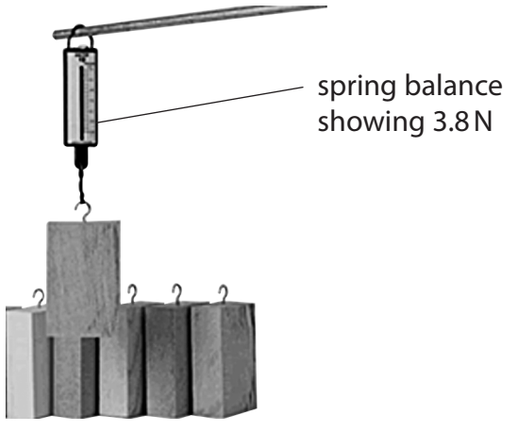

© webscaping.co.uk

Figure 1

Use a word from the box to complete the sentence below.

density	mass	volume	weight

The quantity measured by the spring balance in Figure 1 is

(1)

.....

DO NOT WRITE IN THIS AREA
DO NOT WRITE IN THIS AREA
DO NOT WRITE IN THIS AREA
DO NOT WRITE IN THIS AREA
DO NOT WRITE IN THIS AREA
DO NOT WRITE IN THIS AREA

(c) A toy car has a mass of 0.10 kg.
The toy car accelerates at 2.0 m/s^2.

Calculate the force producing this acceleration.
State the unit.

Use the equation

$F = m \times a$

(3)

force = ... unit = ...

(d) Use words from the box to complete the sentences below.

direction	energy	mass	size

(2)

Vectors have size and ..... .

Scalars have only ..... .

(Total for Question 1 = 7 marks)

DO NOT WRITE IN THIS AREA
DO NOT WRITE IN THIS AREA
DO NOT WRITE IN THIS AREA
DO NOT WRITE IN THIS AREA
DO NOT WRITE IN THIS AREA
DO NOT WRITE IN THIS AREA

2 (a) A sound wave in air travels a distance of 220 m in a time of 0.70 s.

(i) State the equation linking speed, distance and time.

(1)

(ii) Calculate the speed of the sound wave in air.

(2)

wave speed = ... m/s

(b) Figure 2 shows water waves spreading out from a source.

A student measures the wavelength of the waves.

He uses a ruler to measure the distance from one crest to the next crest.

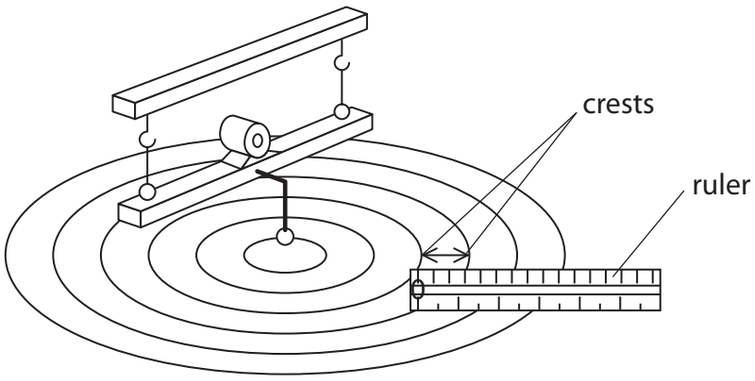

Figure 2

Explain how to improve the student's method for measuring the wavelength.

(2)

.....

.....

.....

.....

DO NOT WRITE IN THIS AREA
DO NOT WRITE IN THIS AREA
DO NOT WRITE IN THIS AREA
DO NOT WRITE IN THIS AREA
DO NOT WRITE IN THIS AREA
DO NOT WRITE IN THIS AREA

(c) Sound waves are longitudinal waves.

Water waves are transverse waves.

Describe the difference between longitudinal waves and transverse waves.

(3)

.....

.....

.....

.....

.....

.....

(Total for Question 2 = 8 marks)

DO NOT WRITE IN THIS AREA
DO NOT WRITE IN THIS AREA
DO NOT WRITE IN THIS AREA
DO NOT WRITE IN THIS AREA
DO NOT WRITE IN THIS AREA
DO NOT WRITE IN THIS AREA

3 (a) A copper can, painted black, contains boiling water at 100 °C.

The can is left to cool and a measurement of the water temperature is taken every 5 minutes.

Figure 3 shows the measurements.

time in minutes	temperature in °C
0	100
5	74
10	60
15	56
20	37
25	30
30	25

Figure 3

(i) Two points, shaded in the table, have not been plotted.

Plot these two points on the graph, in Figure 4.

(2)

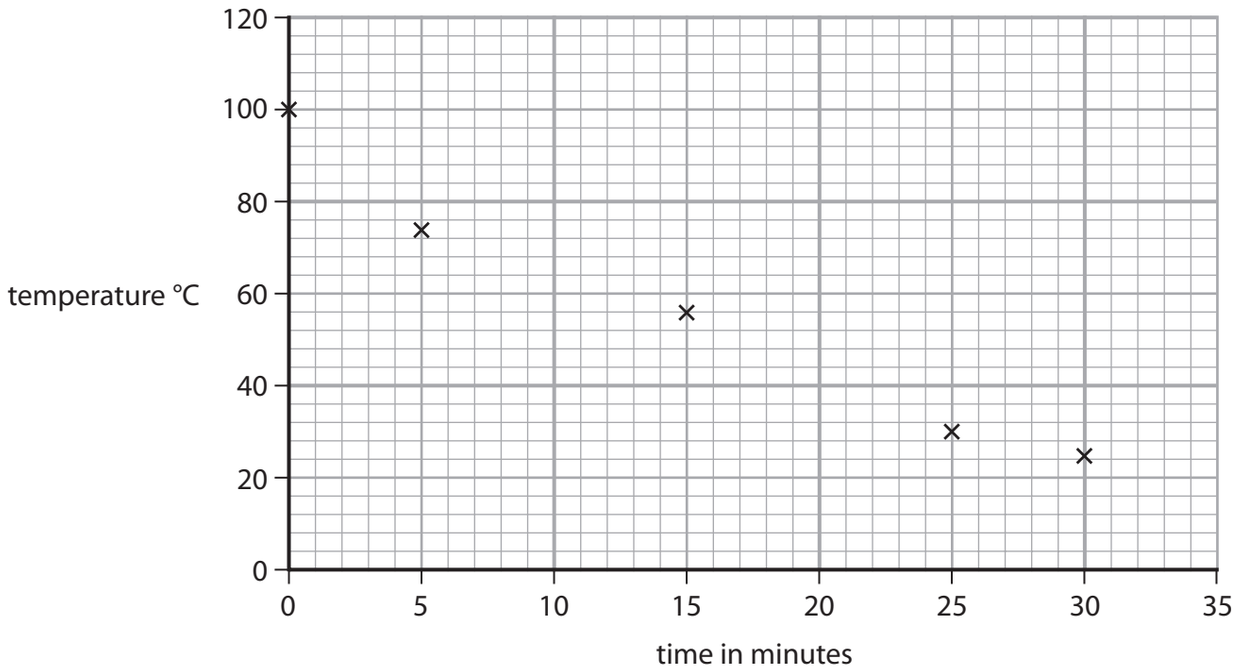

Figure 4

(ii) One of the points on the graph in Figure 4 is anomalous.

Circle the anomalous point.

(1)

(iii) Draw the best fit curve on the graph in Figure 4.

(1)

DO NOT WRITE IN THIS AREA
DO NOT WRITE IN THIS AREA
DO NOT WRITE IN THIS AREA
DO NOT WRITE IN THIS AREA
DO NOT WRITE IN THIS AREA
DO NOT WRITE IN THIS AREA

(iv) An identical can contains the same amount of boiling water.

This can has a shiny silver surface.

The measurements are repeated with this can and a new curve is drawn.

State how the cooling curve would be different from the curve in the graph in Figure 4.

(1)

.....

.....

(b) Figure 5 is a graph showing the intensity–wavelength curves for two hot objects, L and M.

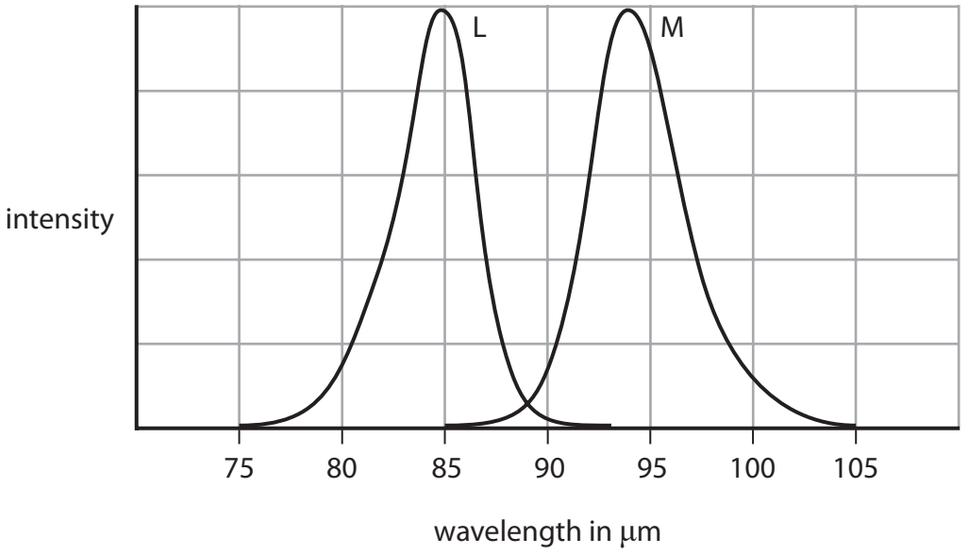

Figure 5

(i) Estimate the wavelength where the intensity is at a maximum for each of the objects.

(2)

wavelength at maximum intensity for object L = ... μm

wavelength at maximum intensity for object M = ... μm

(ii) State, with a reason, which object is the hotter object.

(1)

Object .....

Reason .....

.....

(Total for Question 3 = 8 marks)

DO NOT WRITE IN THIS AREA
DO NOT WRITE IN THIS AREA
DO NOT WRITE IN THIS AREA
DO NOT WRITE IN THIS AREA
DO NOT WRITE IN THIS AREA
DO NOT WRITE IN THIS AREA

4 (a) Figure 6 shows a spinning flywheel.

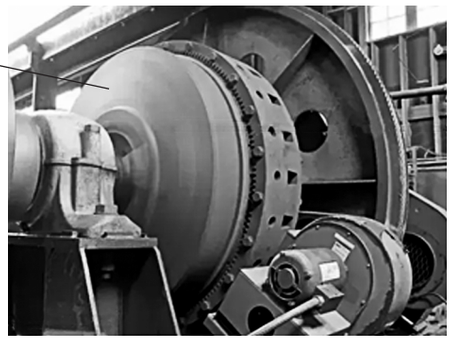

© coasterphotos.com

Figure 6

(i) State how energy is stored in a spinning flywheel.

(1)

.....

(ii) State **one** way to increase the amount of energy stored in the flywheel.

(1)

.....

DO NOT WRITE IN THIS AREA
DO NOT WRITE IN THIS AREA
DO NOT WRITE IN THIS AREA
DO NOT WRITE IN THIS AREA
DO NOT WRITE IN THIS AREA
DO NOT WRITE IN THIS AREA

(b) Figure 7 shows a skier going down a hill.

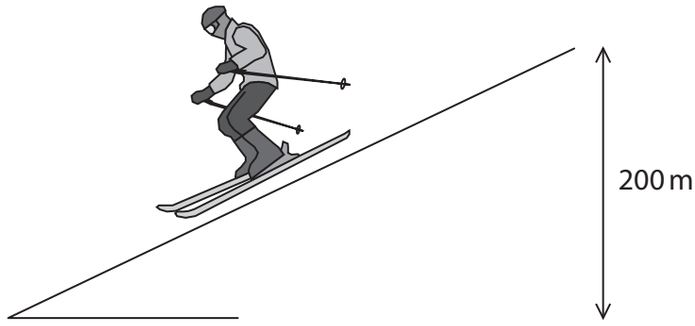

Figure 7

She descends through a vertical height of 200 m.

The skier's mass is 65 kg.

(i) Calculate the change in gravitational potential energy.

Use the equation

$$\Delta GPE = m \times g \times \Delta h$$

Take the gravitational field strength, g, as 10 N / kg.

(2)

change in gravitational potential energy = ... J

(ii) At the bottom of the slope her speed was 36 m/s.

Calculate her kinetic energy at the bottom of the slope.

Use the equation

$$KE = \frac{1}{2} \times m \times v^2$$

(3)

kinetic energy = ... J

DO NOT WRITE IN THIS AREA
DO NOT WRITE IN THIS AREA
DO NOT WRITE IN THIS AREA
DO NOT WRITE IN THIS AREA
DO NOT WRITE IN THIS AREA
DO NOT WRITE IN THIS AREA

(c) Describe how her speed at the bottom of the slope could be determined.

(3)

.....

.....

.....

.....

.....

.....

(Total for Question 4 = 10 marks)

DO NOT WRITE IN THIS AREA
DO NOT WRITE IN THIS AREA
DO NOT WRITE IN THIS AREA
DO NOT WRITE IN THIS AREA
DO NOT WRITE IN THIS AREA
DO NOT WRITE IN THIS AREA

DO NOT WRITE IN THIS AREA
DO NOT WRITE IN THIS AREA
DO NOT WRITE IN THIS AREA
DO NOT WRITE IN THIS AREA
DO NOT WRITE IN THIS AREA
DO NOT WRITE IN THIS AREA

BLANK PAGE

5 Figure 8 shows a helium nucleus.

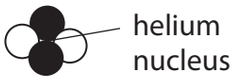

Figure 8

(a) Two of the particles in the helium nucleus are neutrons.

State the name of the other two particles in the helium nucleus.

(1)

.....

(b) (i) Describe the difference between a fusion reaction and a fission reaction.

(2)

.....

.....

.....

.....

(ii) Nuclear fusion does not happen at low temperatures because of electrostatic repulsion between

(1)

☒ **A** beta particles

☒ **B** electrons

☒ **C** neutrons

☒ **D** protons

DO NOT WRITE IN THIS AREA
DO NOT WRITE IN THIS AREA
DO NOT WRITE IN THIS AREA
DO NOT WRITE IN THIS AREA
DO NOT WRITE IN THIS AREA
DO NOT WRITE IN THIS AREA

(c) The energy released per kilogram of fuel in a fusion reaction is 845 000 GJ.

The energy released per kilogram of fuel in burning oil is 0.0394 GJ.

(i) Calculate the ratio of the energy released in fusion compared with the energy released in burning oil.

Use the equation

$$\text{ratio} = \frac{\text{energy released from fusion}}{\text{energy released by burning oil}}$$

(2)

ratio = ...

(ii) State **two** advantages of using a fusion reactor rather than burning oil in a power station.

(2)

1 .....

.....

2 .....

.....

(iii) State **two** of the difficulties that need to be overcome to produce a fusion reactor.

(2)

1 .....

.....

2 .....

.....

(Total for Question 5 = 10 marks)

DO NOT WRITE IN THIS AREA
DO NOT WRITE IN THIS AREA
DO NOT WRITE IN THIS AREA
DO NOT WRITE IN THIS AREA
DO NOT WRITE IN THIS AREA
DO NOT WRITE IN THIS AREA

6 (a) State **two** non-renewable energy sources.

(2)

1 .....

2 .....

(b) Figure 9 shows the renewable energy sources used in the UK in 2015.

Figure 9 is to scale.

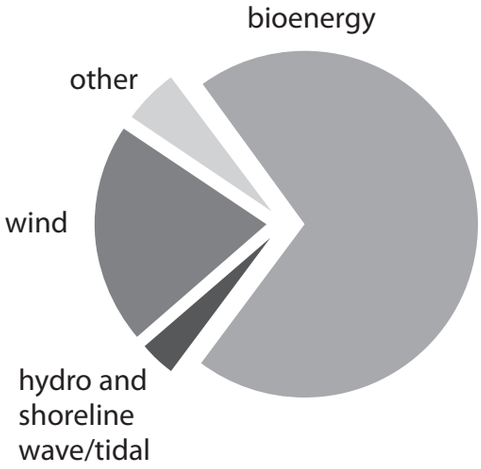

Figure 9

(i) State the energy source that gave the greatest amount of renewable energy for the UK in 2015.

(1)

.....

(ii) Justify your choice of energy source in part (i).

(1)

.....

.....

(iii) State which of these energy sources gave about 20% of the energy from renewable sources for the UK in 2015.

(1)

.....

DO NOT WRITE IN THIS AREA
DO NOT WRITE IN THIS AREA
DO NOT WRITE IN THIS AREA
DO NOT WRITE IN THIS AREA
DO NOT WRITE IN THIS AREA
DO NOT WRITE IN THIS AREA

(c) Figure 10 shows all the energy sources used in Canada in 2014 and a prediction for 2040.

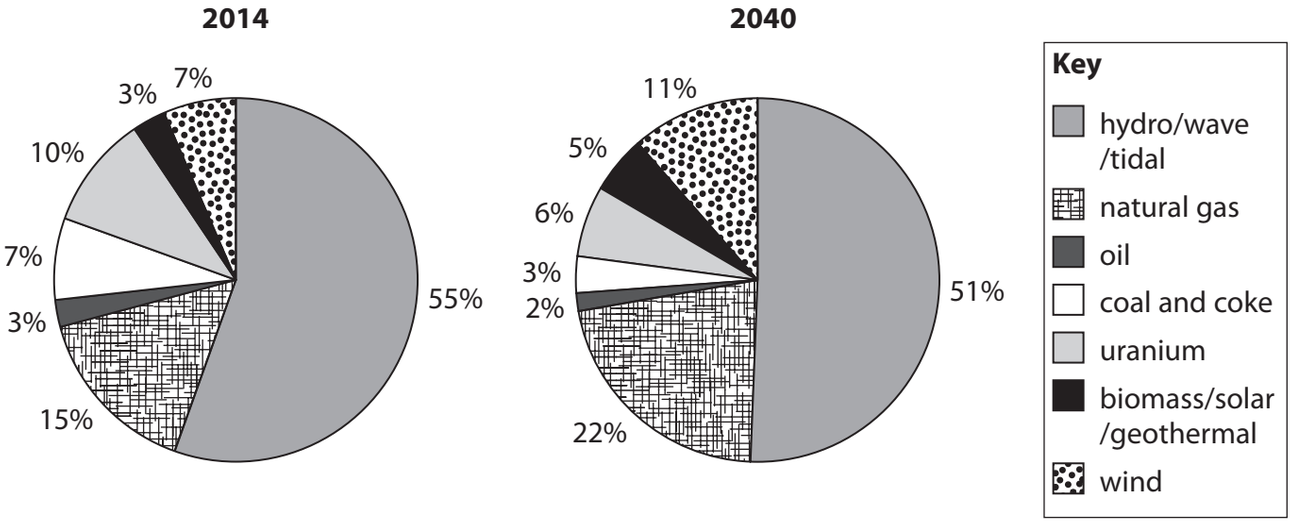

Figure 10

Discuss the effects on the environment of **two** predicted changes between 2014 and 2040.

(4)

change 1 .....

.....

effect on the environment .....

.....

change 2 .....

.....

effect on the environment .....

.....

DO NOT WRITE IN THIS AREA
DO NOT WRITE IN THIS AREA
DO NOT WRITE IN THIS AREA
DO NOT WRITE IN THIS AREA
DO NOT WRITE IN THIS AREA
DO NOT WRITE IN THIS AREA

(d) Figure 11 shows a wind turbine.

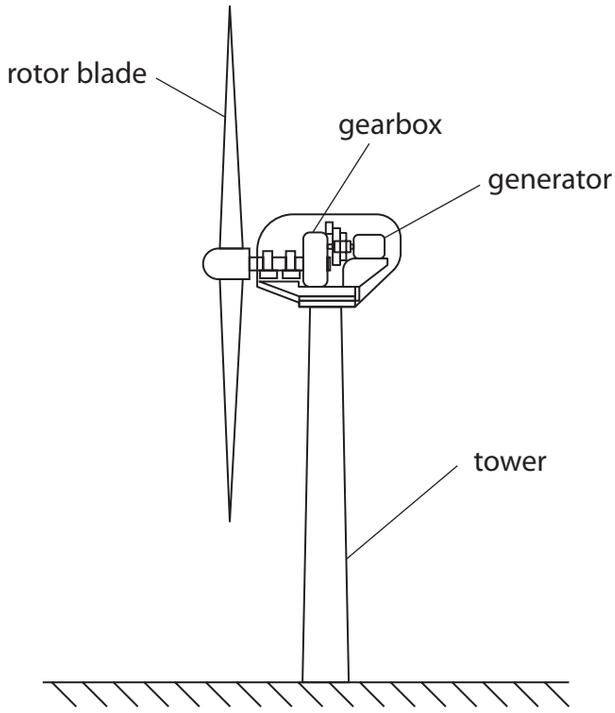

Figure 11

Explain how unwanted energy transfers could be reduced in the gear box.

(2)

.....

.....

.....

.....

(Total for Question 6 = 11 marks)

DO NOT WRITE IN THIS AREA
DO NOT WRITE IN THIS AREA
DO NOT WRITE IN THIS AREA
DO NOT WRITE IN THIS AREA
DO NOT WRITE IN THIS AREA
DO NOT WRITE IN THIS AREA

DO NOT WRITE IN THIS AREA
DO NOT WRITE IN THIS AREA
DO NOT WRITE IN THIS AREA
DO NOT WRITE IN THIS AREA
DO NOT WRITE IN THIS AREA
DO NOT WRITE IN THIS AREA

BLANK PAGE

7 (a) Figure 12 is a diagram showing a lens, with some light rays passing through it.

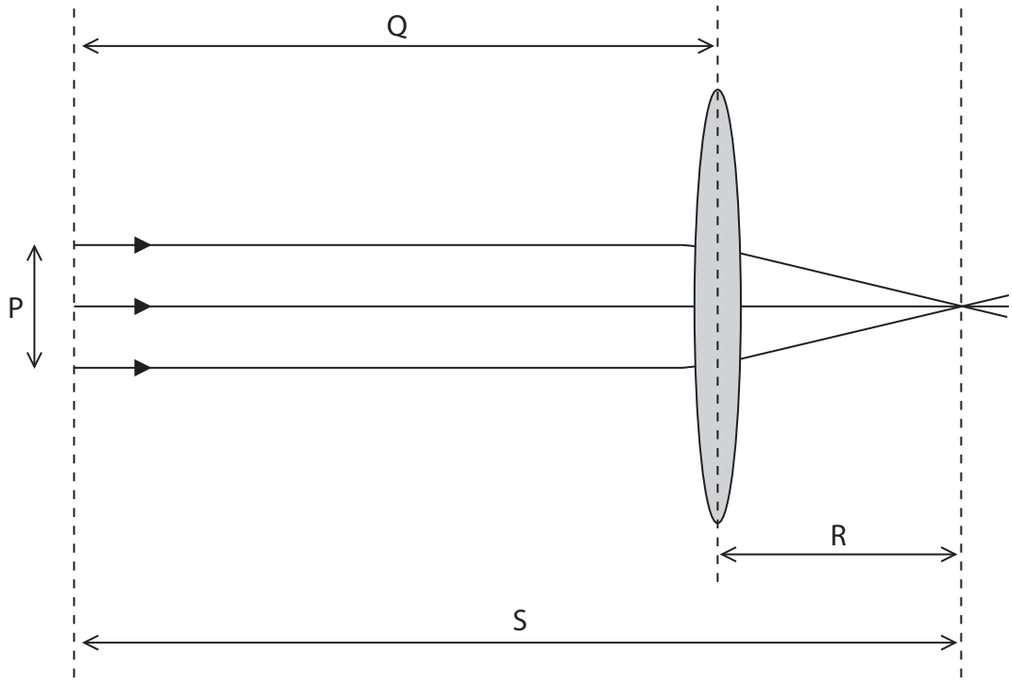

Figure 12

(i) This diagram shows a

(1)

☒ **A** converging lens forming a real image

☒ **B** diverging lens forming a real image

☒ **C** converging lens forming a virtual image

☒ **D** diverging lens forming a virtual image

(ii) Which length, labelled on Figure 12, shows the focal length of the lens?

(1)

☒ **P**

☒ **Q**

☒ **R**

☒ **S**

DO NOT WRITE IN THIS AREA
DO NOT WRITE IN THIS AREA
DO NOT WRITE IN THIS AREA
DO NOT WRITE IN THIS AREA
DO NOT WRITE IN THIS AREA
DO NOT WRITE IN THIS AREA

(b) Calculate the power of a lens of focal length 17 cm.

Use the equation

$$\text{power (in dioptres)} = \frac{1}{\text{focal length (in metres)}}$$

Give the answer to 2 significant figures.

(3)

power = ... dioptres

DO NOT WRITE IN THIS AREA
DO NOT WRITE IN THIS AREA
DO NOT WRITE IN THIS AREA
DO NOT WRITE IN THIS AREA
DO NOT WRITE IN THIS AREA
DO NOT WRITE IN THIS AREA

*(c) More than two thousand years ago the Earth was believed to be at the centre of the universe as shown in Figure 13.

The planets, the Moon and the Sun were believed to be in orbit around the Earth.

In 1543 Nicolaus Copernicus proposed that the Earth was a planet, and that the Earth and the other planets orbit around the Sun.
This model is shown in Figure 14.

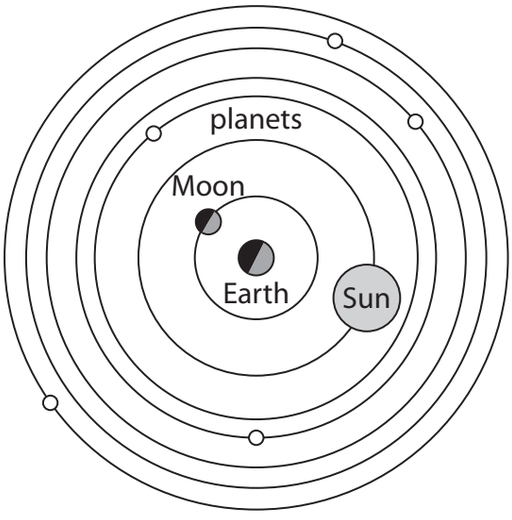

Figure 13

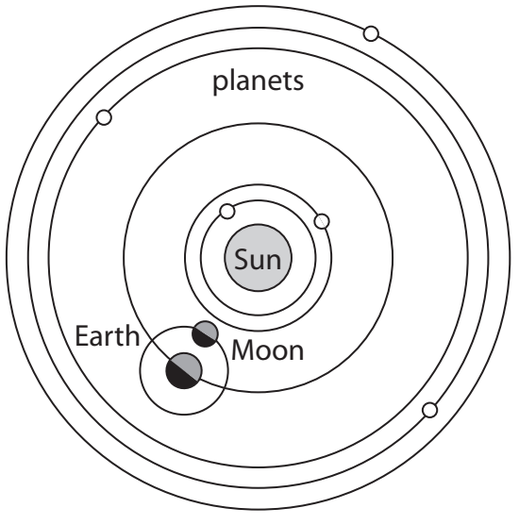

Figure 14

DO NOT WRITE IN THIS AREA
DO NOT WRITE IN THIS AREA
DO NOT WRITE IN THIS AREA
DO NOT WRITE IN THIS AREA
DO NOT WRITE IN THIS AREA
DO NOT WRITE IN THIS AREA

Discuss how evidence has changed our views of the universe.

(6)

.....

.....

.....

.....

.....

.....

.....

.....

.....

.....

.....

.....

.....

.....

(Total for Question 7 = 11 marks)

DO NOT WRITE IN THIS AREA
DO NOT WRITE IN THIS AREA
DO NOT WRITE IN THIS AREA
DO NOT WRITE IN THIS AREA
DO NOT WRITE IN THIS AREA
DO NOT WRITE IN THIS AREA

8 (a) A student investigates what happens when light travels from air to glass.

Figure 15 shows some of the apparatus used in the investigation.

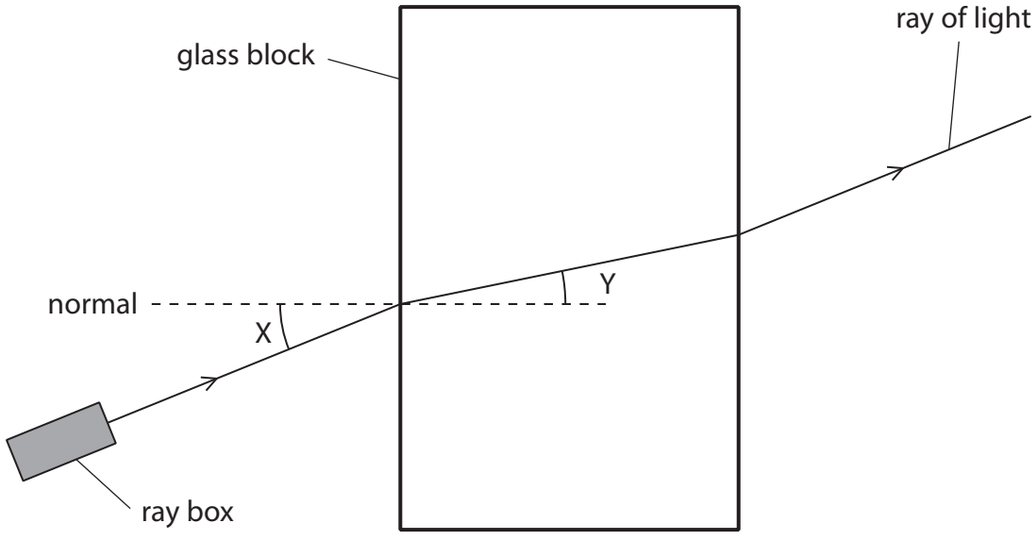

Figure 15

(i) In Figure 15, angle Y is the angle of

(1)

☒ **A** deflection

☒ **B** incidence

☒ **C** reflection

☒ **D** refraction

DO NOT WRITE IN THIS AREA
DO NOT WRITE IN THIS AREA
DO NOT WRITE IN THIS AREA
DO NOT WRITE IN THIS AREA
DO NOT WRITE IN THIS AREA
DO NOT WRITE IN THIS AREA

(ii) Figure 16 is a graph of the student's results.

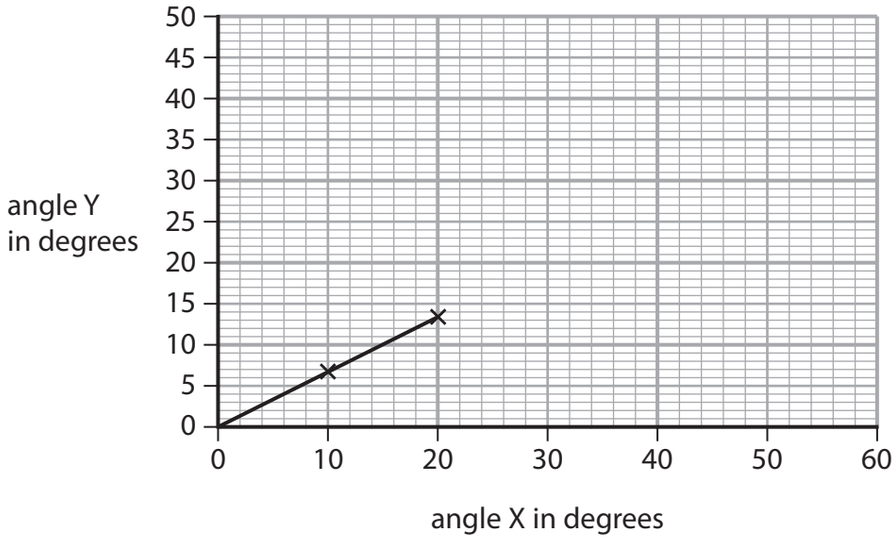

Figure 16

Use the graph to calculate a value for

$$\frac{\text{angle Y}}{\text{angle X}}$$

(2)

$\frac{\text{angle Y}}{\text{angle X}}$ = ...

(iii) The student concludes that angle Y is directly proportional to angle X.

Explain what the student must do to test this conclusion in more detail.

(3)

.....

.....

.....

.....

.....

.....

DO NOT WRITE IN THIS AREA
DO NOT WRITE IN THIS AREA
DO NOT WRITE IN THIS AREA
DO NOT WRITE IN THIS AREA
DO NOT WRITE IN THIS AREA
DO NOT WRITE IN THIS AREA

(b) The speed of light is 3.0×10^8 m/s.

The wavelength of yellow light is 5.8×10^{-7} m.

Calculate the frequency of yellow light.

State the unit.

Use the equation

$$\text{frequency} = \frac{\text{speed}}{\text{wavelength}}$$

(3)

frequency = ... unit .....

(c) (i) Give **one** colour of light that has a longer wavelength than yellow light.

(1)

.....

(ii) Give **one** colour of light that has a higher frequency than yellow light.

(1)

.....

(Total for Question 8 = 11 marks)

DO NOT WRITE IN THIS AREA
DO NOT WRITE IN THIS AREA
DO NOT WRITE IN THIS AREA
DO NOT WRITE IN THIS AREA
DO NOT WRITE IN THIS AREA
DO NOT WRITE IN THIS AREA

9 Figure 17 shows a Geiger-Müller (GM) tube used for measuring radioactivity.

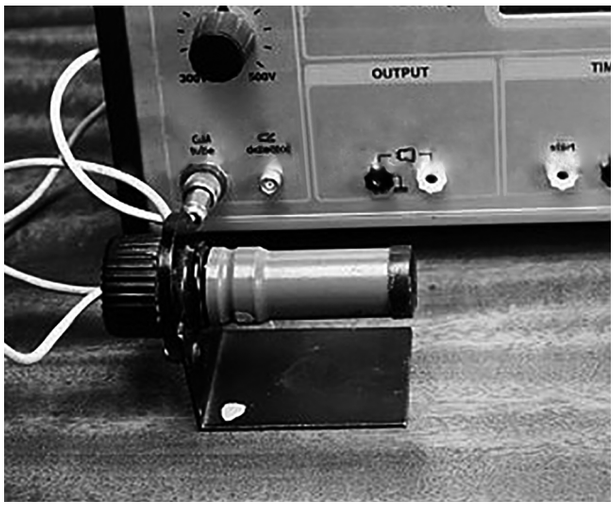

©Andrew Lambert Science Photo Library

Figure 17

(a) Describe how a teacher should use a Geiger-Müller (GM) tube to compare the count-rates from two different radioactive rocks.

(4)

.....

.....

.....

.....

.....

.....

.....

.....

DO NOT WRITE IN THIS AREA
DO NOT WRITE IN THIS AREA
DO NOT WRITE IN THIS AREA
DO NOT WRITE IN THIS AREA
DO NOT WRITE IN THIS AREA
DO NOT WRITE IN THIS AREA

(b) A hospital uses a radioactive isotope with a half-life of 6 hours.

A technician measures a count rate of 80 counts per minute (cpm) from this isotope.

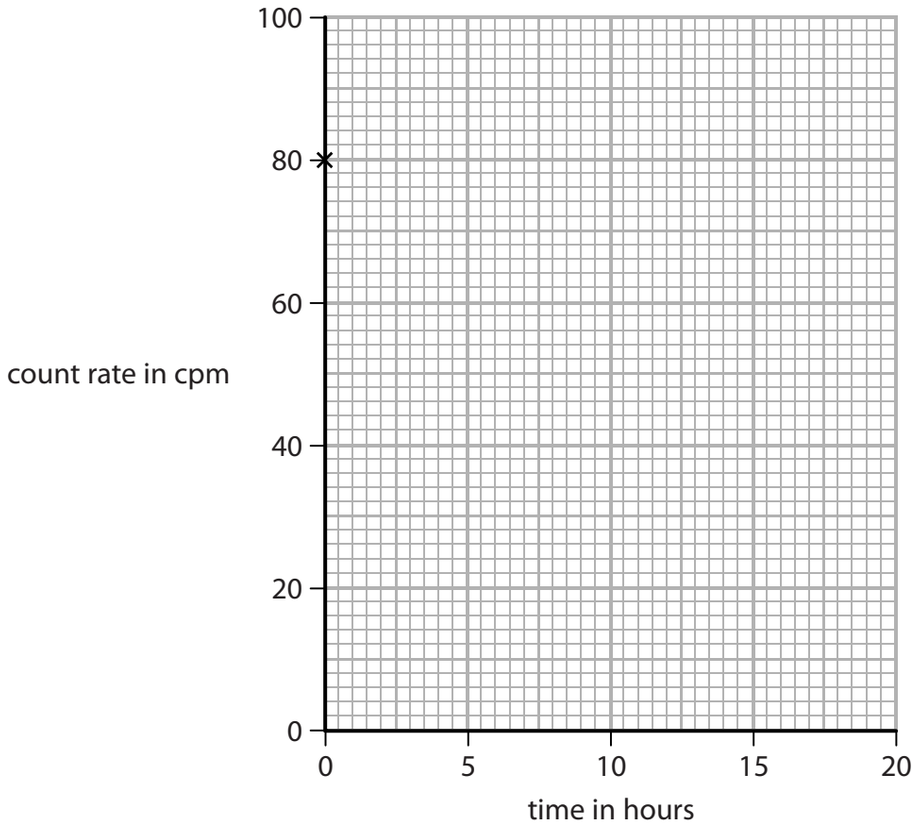

Figure 18

Complete the graph on Figure 18, as accurately as possible, to show how the count-rate from this isotope will change from the time of the first measurement.

The first point is already drawn in Figure 18.

(3)

DO NOT WRITE IN THIS AREA
DO NOT WRITE IN THIS AREA
DO NOT WRITE IN THIS AREA
DO NOT WRITE IN THIS AREA
DO NOT WRITE IN THIS AREA
DO NOT WRITE IN THIS AREA

*(c) A radioactive rock is placed near to the front of a Geiger-Müller (GM) tube.

A radioactivity count-rate is first made in air.

The count-rate is measured again with each of three different absorbers between the rock and the GM tube.

Figure 19 shows the count-rates measured.

absorber	count-rate in counts per minute
3 cm of air	1272
thin sheet of paper	931
3 mm thick sheet of aluminium	328
2 cm thick sheet of lead	21

Figure 19

A scientist has an idea that the rock emits three different types of radiation.

Explain how the data in this table supports the scientist's idea.

(6)

.....

.....

.....

.....

.....

.....

.....

.....

.....

.....

.....

(Total for Question 9 = 13 marks)

DO NOT WRITE IN THIS AREA
DO NOT WRITE IN THIS AREA
DO NOT WRITE IN THIS AREA
DO NOT WRITE IN THIS AREA
DO NOT WRITE IN THIS AREA
DO NOT WRITE IN THIS AREA

BLANK PAGE

DO NOT WRITE IN THIS AREA
DO NOT WRITE IN THIS AREA
DO NOT WRITE IN THIS AREA
DO NOT WRITE IN THIS AREA
DO NOT WRITE IN THIS AREA
DO NOT WRITE IN THIS AREA

10 (a) Which row of the table is correct for both force and velocity?

(1)

	force	velocity
☒ **A**	scalar	scalar
☒ **B**	scalar	vector
☒ **C**	vector	scalar
☒ **D**	vector	vector

(b) Figure 20 shows a satellite orbiting the Earth.

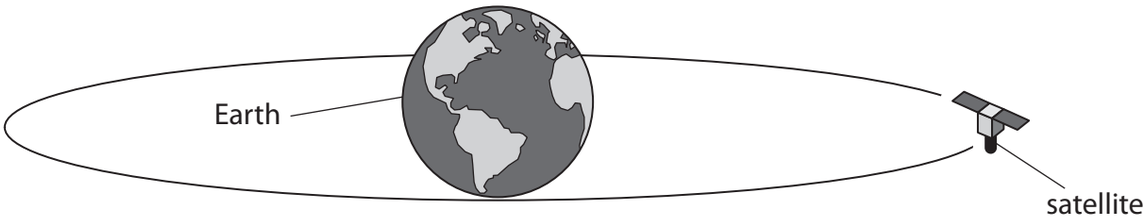

Figure 20

(i) State the name of the force that keeps the satellite in orbit around the Earth.

(1)

.....

(ii) Draw an arrow on Figure 20 to show the direction of the force acting on the satellite, that keeps the satellite in orbit around the Earth.

Label this arrow 'F'.

(1)

DO NOT WRITE IN THIS AREA
DO NOT WRITE IN THIS AREA
DO NOT WRITE IN THIS AREA
DO NOT WRITE IN THIS AREA
DO NOT WRITE IN THIS AREA
DO NOT WRITE IN THIS AREA

(c) Satellites are used to gather data about the origin of the Universe.

The Big Bang theory is a theory about the origin of the Universe.

Evidence for the Big Bang theory is provided by red-shift and CMB radiation.

(i) Describe what is meant by red-shift.

(2)

.....

.....

.....

.....

(ii) Explain how red-shift provides evidence for the Big Bang theory.

(2)

.....

.....

.....

.....

(iii) The Cosmic Background Explorer (COBE) satellite observed CMB radiation from 1989 to 1993.

State what the 'M' in CMB radiation stands for.

(1)

.....

(iv) State what is meant by 'cosmic background radiation'.

(1)

.....

.....

DO NOT WRITE IN THIS AREA
DO NOT WRITE IN THIS AREA
DO NOT WRITE IN THIS AREA
DO NOT WRITE IN THIS AREA
DO NOT WRITE IN THIS AREA
DO NOT WRITE IN THIS AREA

(v) Explain how the presence of CMB radiation provides evidence for the Big Bang theory.

(2)

.....

.....

.....

.....

(Total for Question 10 = 11 marks)

TOTAL FOR PAPER = 100 MARKS

DO NOT WRITE IN THIS AREA
DO NOT WRITE IN THIS AREA
DO NOT WRITE IN THIS AREA
DO NOT WRITE IN THIS AREA
DO NOT WRITE IN THIS AREA
DO NOT WRITE IN THIS AREA

Equations

(final velocity)^2 – (initial velocity)^2 = 2 × acceleration × distance $v^2 - u^2 = 2 \times a \times x$
energy transferred = current × potential difference × time $E = I \times V \times t$
potential difference across primary coil × current in primary coil = potential difference across secondary coil × current in secondary coil $V_p \times I_p = V_s \times I_s$
change in thermal energy = mass × specific heat capacity × change in temperature $\Delta Q = m \times c \times \Delta\theta$
thermal energy for a change of state = mass × specific latent heat $Q = m \times L$
$P_1 V_1 = P_2 V_2$ to calculate pressure or volume for gases of fixed mass at constant temperature
energy transferred in stretching = 0.5 × spring constant × (extension)^2 $E = ½ \times k \times x^2$

DO NOT WRITE IN THIS AREA
DO NOT WRITE IN THIS AREA
DO NOT WRITE IN THIS AREA