Please check the examination details below before entering your candidate information

Candidate surname	Other names

Pearson Edexcel Level 3 GCE

Centre Number | Candidate Number

Time 1 hour 30 minutes

Paper reference **8BI0/01**

Biology B

Advanced Subsidiary
PAPER 1: Core Cellular Biology and Microbiology

You must have:
Calculator, HB pencil, ruler

Total Marks

Instructions

- Use **black** ink or ball-point pen.
- **Fill in the boxes** at the top of this page with your name, centre number and candidate number.
- Answer **all** questions.
- Answer the questions in the spaces provided – *there may be more space than you need.*

Information

- The total mark for this paper is 80.
- The marks for **each** question are shown in brackets – *use this as a guide as to how much time to spend on each question.*
- In questions marked with an **asterisk** (*), marks will be awarded for your ability to structure your answer logically showing how the points that you make are related or follow on from each other where appropriate.

Advice

- Read each question carefully before you start to answer it.
- Try to answer every question.
- Check your answers if you have time at the end.
- Good luck with your examination.

Turn over

©2021 Pearson Education Ltd.

Pearson

Answer ALL questions.

Some questions must be answered with a cross in a box ☒. If you change your mind about an answer, put a line through the box ☒ and then mark your new answer with a cross ☒.

1 Prokaryotic cells and eukaryotic cells contain a number of organelles.

The table gives information about some organelles.

Organelle	Information about each organelle
P	10^{-9} m in diameter involved in translation
Q	5000 nm in diameter contains thylakoids
R	stack of curved cisternae involved in protein modification
S	1.2×10^{-3} mm in diameter has a single membrane

(a) Which of the following is a lysosome?

(1)

☒ **A** P

☒ **B** Q

☒ **C** R

☒ **D** S

(b) How many of the organelles in the table contain DNA?

(1)

☒ **A** 1

☒ **B** 2

☒ **C** 3

☒ **D** 4

DO NOT WRITE IN THIS AREA DO NOT WRITE IN THIS AREA DO NOT WRITE IN THIS AREA

(c) The table gives information about organelles found in prokaryotic cells and animal cells.

For each organelle, put **one** cross ☒ in the appropriate box in each row to show which cells contain these organelles.

(2)

Organelle	Organelle found in			
	both prokaryotic cells and animal cells	**prokaryotic cells only**	**animal cells only**	**neither prokaryotic cells nor animal cells**
P	☒	☒	☒	☒
Q	☒	☒	☒	☒

(d) Which of the following shows the organelles in order of size from largest to smallest?

(1)

☒ **A** P S Q

☒ **B** Q P S

☒ **C** Q S P

☒ **D** S P Q

(Total for Question 1 = 5 marks)

DO NOT WRITE IN THIS AREA
DO NOT WRITE IN THIS AREA
DO NOT WRITE IN THIS AREA

2 Mineral ions are needed for plant growth.

A student had a plant that had been kept in the same soil for a long time.

The growth of the plant had slowed down and the leaves were pale green.

The student decided to add fertiliser to the plant and measure the increase in height of the plant.

The student made two predictions:

- the leaves would gradually become greener
- the plant would not start growing until the leaves were greener.

(a) Explain why the student made these predictions.

(3)

.....

.....

.....

.....

.....

.....

.....

.....

.....

(b) The student used a stock fertiliser solution at a concentration of 500 $\mu g\,cm^{-3}$.

Calculate the volumes of stock fertiliser solution and water that had to be mixed together to produce 100 cm^3 of fertiliser solution at a concentration of 50 $\mu g\,cm^{-3}$.

(1)

Volume of stock fertiliser solution ..... cm^3

Volume of water ..... cm^3

DO NOT WRITE IN THIS AREA
DO NOT WRITE IN THIS AREA
DO NOT WRITE IN THIS AREA

(c) When the fertiliser was added to the plant, the height of the plant was 130 cm.

Six weeks after the fertiliser was added, the plant had grown to a height of 155 cm.

Calculate the mean growth rate for this plant, in centimetres per day, in this six-week period.

(1)

Answer ..... cm day^{-1}

(Total for Question 2 = 5 marks)

DO NOT WRITE IN THIS AREA
DO NOT WRITE IN THIS AREA
DO NOT WRITE IN THIS AREA

3 Milk from cows contains a number of different types of lipid.

Lipids are made of glycerol and fatty acids.

(a) A triglyceride is one type of lipid.

Which row of the table describes a triglyceride?

(1)

	Number of molecules		Name of bond joining molecules
	Glycerol	**Fatty acid**	
☒ **A**	1	3	glycosidic
☒ **B**	1	3	ester
☒ **C**	3	1	glycosidic
☒ **D**	3	1	ester

(b) Fatty acids are either saturated or unsaturated.

The diagram shows the structure of an unsaturated fatty acid.

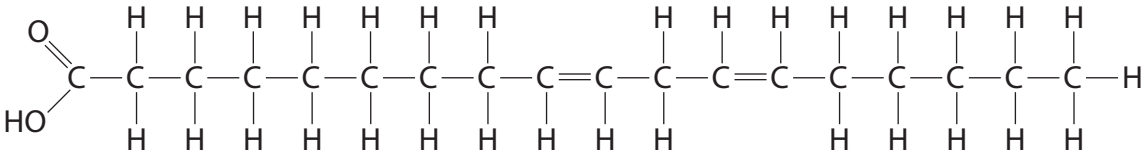

Which row of the table shows the differences between this fatty acid and a saturated fatty acid with the same number of carbons?

(1)

	Number of double bonds in the saturated fatty acid	Number of hydrogen atoms in the saturated fatty acid
☒ **A**	0	35
☒ **B**	0	36
☒ **C**	1	35
☒ **D**	1	36

DO NOT WRITE IN THIS AREA
DO NOT WRITE IN THIS AREA
DO NOT WRITE IN THIS AREA

(c) The table shows the composition of some of the different types of lipid in milk from cows.

Type of lipid	Composition of lipids in milk from cows (%)
monoacylglycerols	0.027
diacylglycerols	0.360
triacyglycerols	97.500
free fatty acids	0.027
phospholipids	0.600

Which row of the table shows the types of lipids that are the median and mode for this set of data?

(1)

		Median	Mode
☒	**A**	diacylglycerols	monoacylglycerols
☒	**B**	diacylglycerols	triacylglycerols
☒	**C**	monoacylglycerols	diacylglycerols
☒	**D**	monoacylglycerols	triacylglycerols

(d) Phospholipids have a different structure from other lipids, such as triglycerides.

Give one difference in the properties of phospholipids and triglycerides.

(1)

.....

.....

.....

DO NOT WRITE IN THIS AREA
DO NOT WRITE IN THIS AREA
DO NOT WRITE IN THIS AREA

(e) Milk from cows also contains a solution of proteins, lactose and mineral ions.

The lipids in milk are carried inside milk fat globules (MFG).

The diagram shows an MFG.

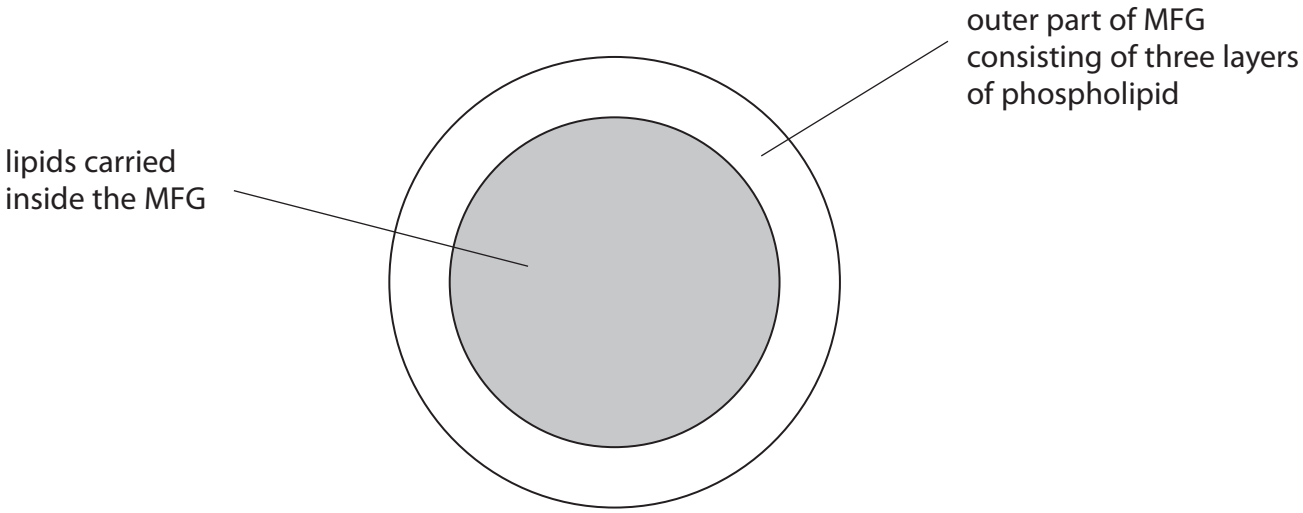

(i) Complete the diagram to show how nine phospholipid molecules would be arranged in the outer part of an MFG.

Use this shape to draw each phospholipid:

(2)

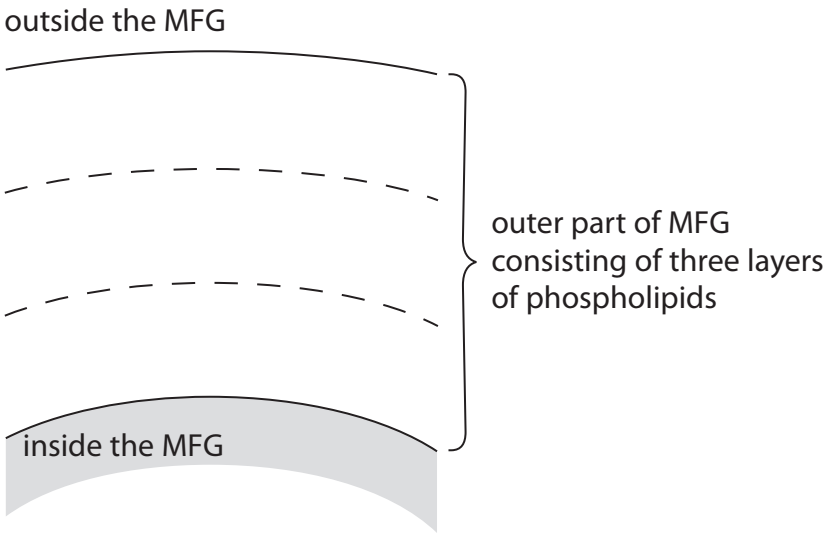

DO NOT WRITE IN THIS AREA
DO NOT WRITE IN THIS AREA
DO NOT WRITE IN THIS AREA

(ii) Explain the structure of an MFG.

(3)

.....

.....

.....

.....

.....

.....

.....

.....

.....

(Total for Question 3 = 9 marks)

DO NOT WRITE IN THIS AREA
DO NOT WRITE IN THIS AREA
DO NOT WRITE IN THIS AREA

BLANK PAGE

DO NOT WRITE IN THIS AREA
DO NOT WRITE IN THIS AREA
DO NOT WRITE IN THIS AREA

4 Insulin is a protein that is composed of two polypeptide chains, chain A and chain B.

The diagram shows the amino acid sequence of these two polypeptide chains and some of the bonds involved in the folding of this protein.

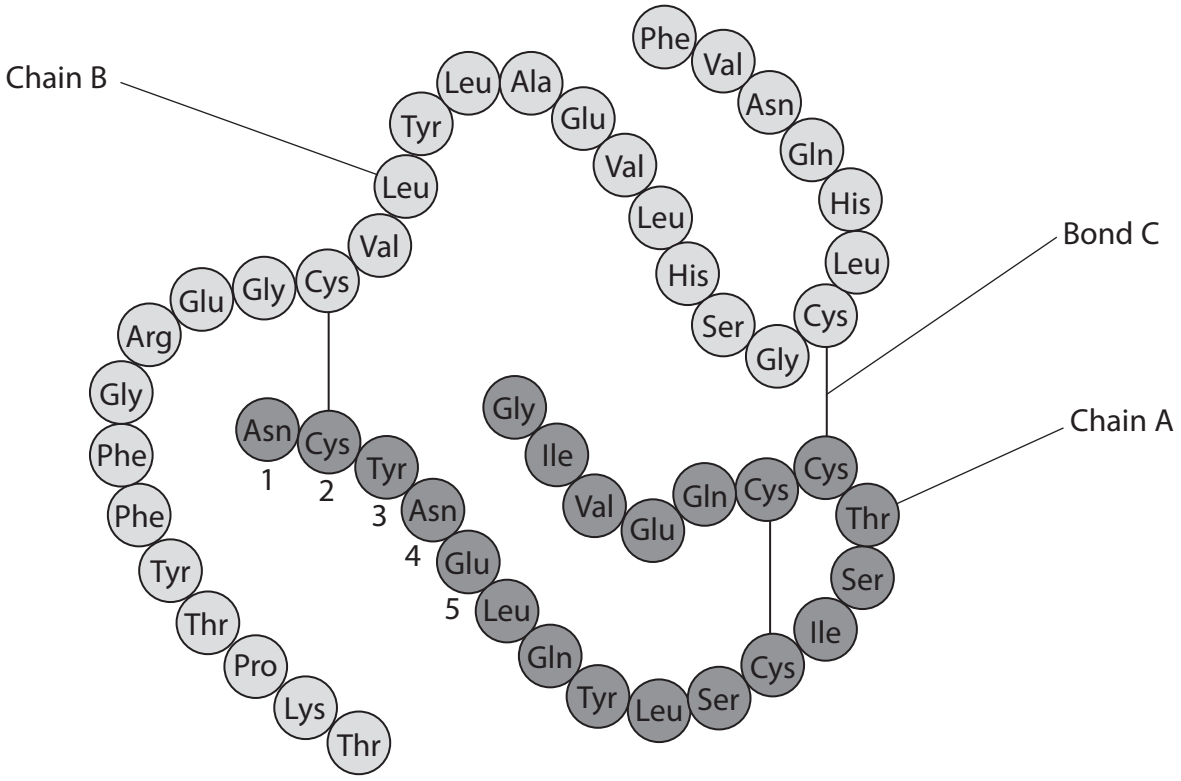

(a) Cysteine (Cys) is one type of amino acid found in insulin.

The presence of cysteine in insulin is important in determining the structure of this protein.

The R group of cysteine is:

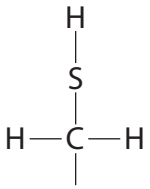

(i) Draw a diagram to show the structure of the amino acid cysteine.

(3)

DO NOT WRITE IN THIS AREA
DO NOT WRITE IN THIS AREA
DO NOT WRITE IN THIS AREA

(ii) Name the covalent bond labelled C in the diagram.

(1)

.....

(b) The table shows the DNA genetic codes on the anti-sense DNA strand (template strand) for amino acids.

Genetic code	Amino acid	Genetic code	Amino acid	Genetic code	Amino acid	Genetic code	Amino acid
AAA AAG	Lys	CAA CAG	Gln	GAA GAG	Glu	TAC TAT	Tyr
AAC AAT	Asn	CAT CAC	His	GAC GAT	Asn	TCA TCC TCG TCT	Ser
ACA ACC ACG ACT	Thr	CCA CCC CCG CCT	Pro	GCA GCC GCG GCT	Ala	TGG	Try
AGA AGG	Arg	CGA CGC CGG CGT	Arg	GGA GGC GGG GGT	Gly	TGC TGT	Cys
AGC AGT	Ser	CTA CTC CTG CTT	Leu	GTA GTC GTG GTT	Val	TTA TTG	Leu
ATA ATC ATT	Ile					TTC TTT	Phe
ATG	Met						

The genetic codes TAA, TAG and TGA are stop codons.

(i) Complete the diagram to show one base sequence in the antisense DNA strand (template strand) coding for the five amino acids numbered in the diagram of insulin.

(1)

Amino acid number	1	2	3	4	5
Amino acid abbreviation	Asn	Cys	Tyr	Asn	Glu
Base sequence on the antisense DNA strand		TGT			

DO NOT WRITE IN THIS AREA
DO NOT WRITE IN THIS AREA
DO NOT WRITE IN THIS AREA

*(ii) Analyse the information to deduce how gene mutations in the DNA base sequence for Cys (amino acid number 2) could affect the structure of insulin.

(6)

.....

.....

.....

.....

.....

.....

.....

.....

.....

.....

.....

.....

.....

.....

.....

.....

.....

.....

(Total for Question 4 = 11 marks)

DO NOT WRITE IN THIS AREA
DO NOT WRITE IN THIS AREA
DO NOT WRITE IN THIS AREA

5 Glandular fever is caused by infection with the Epstein–Barr virus (EBV).

The virus infects B lymphocytes and epithelial cells.

On infection of these cells, the virus enters the lytic cycle.

After the lytic cycle is brought under control by the immune system of the body, latency takes place.

(a) The diagram shows the structure of EBV.

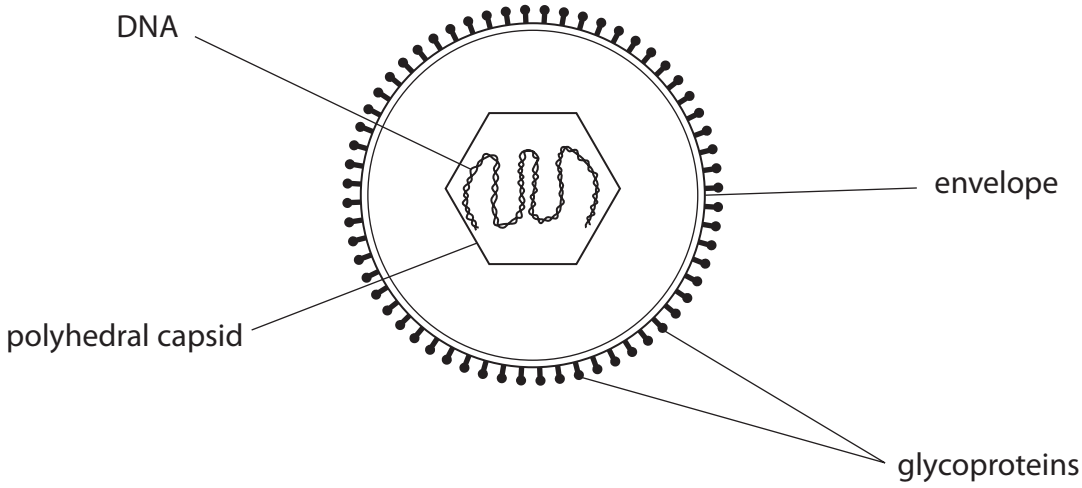

Source from: https://www.hindawi.com/journals/jir/2012/370516/

(i) Which virus has both a polyhedral capsid and an envelope?

(1)

☒ **A** Ebola

☒ **B** human immunodeficiency virus

☒ **C** λ (lambda) phage

☒ **D** tobacco mosaic virus

(ii) State what the genes in the DNA of EBV code for, other than glycoproteins.

(1)

.....

.....

.....

DO NOT WRITE IN THIS AREA
DO NOT WRITE IN THIS AREA
DO NOT WRITE IN THIS AREA

(iii) Describe the role of the glycoproteins in EBV.

(2)

.....

.....

.....

.....

.....

.....

(b) Complete the graph to show the shape of the growth curve of EBV as a result of one lytic cycle after infection of a cell.

(2)

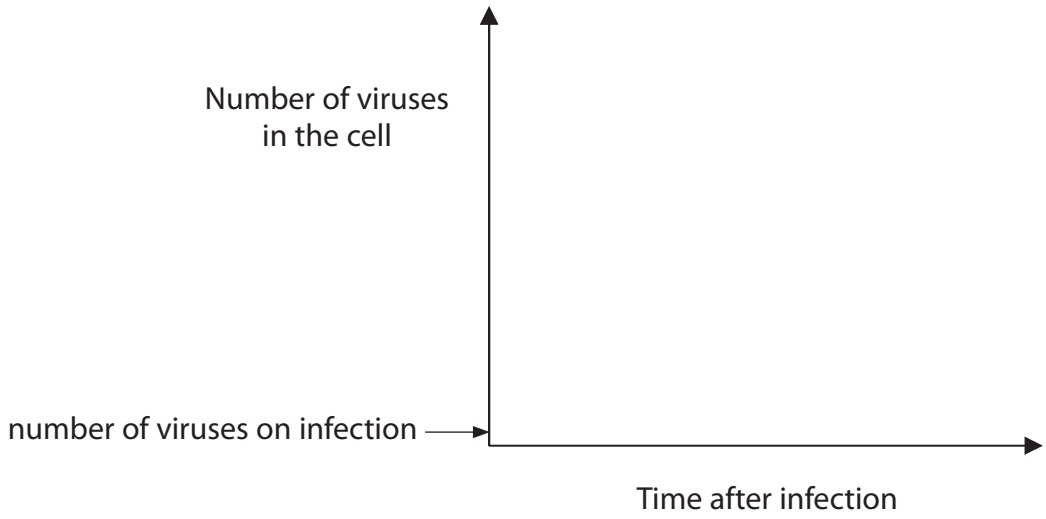

DO NOT WRITE IN THIS AREA
DO NOT WRITE IN THIS AREA
DO NOT WRITE IN THIS AREA

(c) An investigation studied a group of 103 children infected with EBV, in one town.

The number of children with typical symptoms of EBV infection and the number of children with non-typical symptoms of EBV infection were recorded.

The graph shows the results of this investigation.

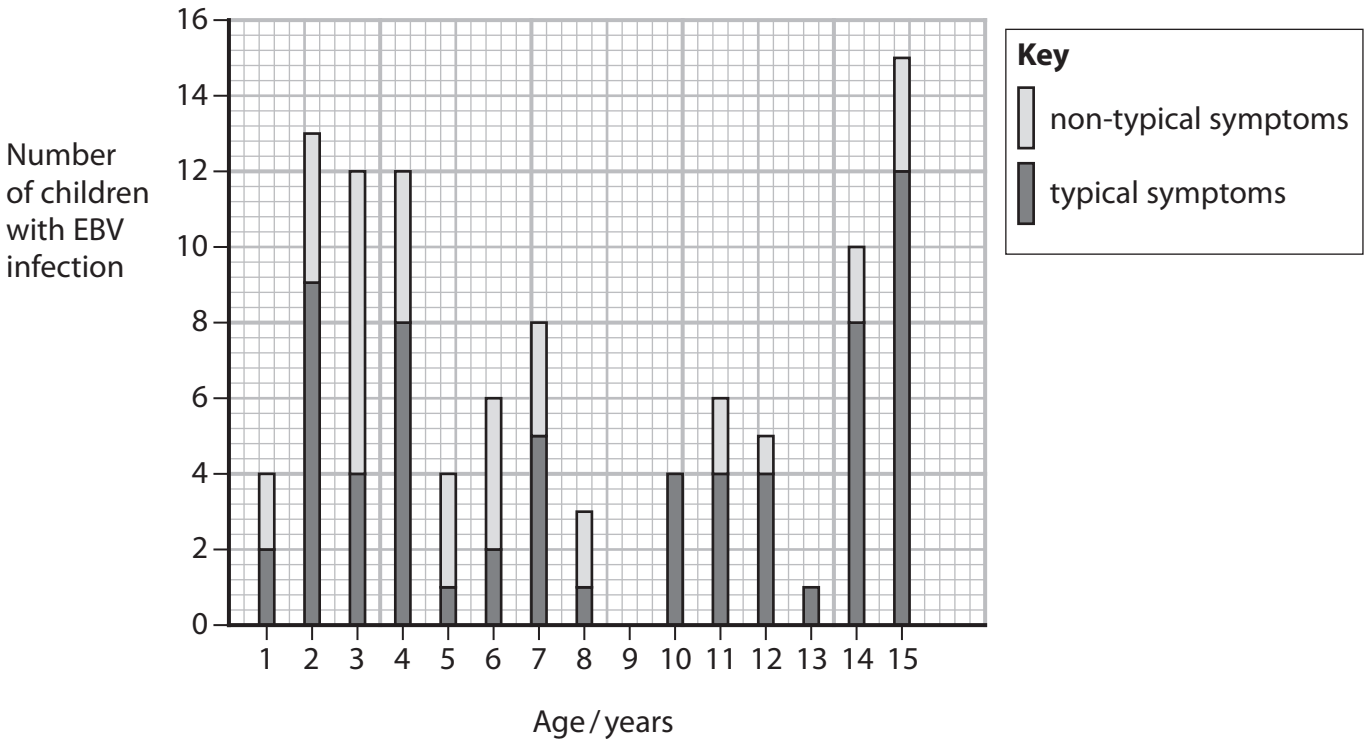

(i) There were 47% boys in this group of children.

Calculate the number of girls in this group of children.

(2)

Answer .....

DO NOT WRITE IN THIS AREA
DO NOT WRITE IN THIS AREA
DO NOT WRITE IN THIS AREA

(ii) Determine the effect of age on the proportion of children with non-typical symptoms of EBV.

(2)

.....

.....

.....

.....

.....

.....

(iii) Describe how this investigation could be improved.

(3)

.....

.....

.....

.....

.....

.....

.....

.....

.....

(Total for Question 5 = 13 marks)

DO NOT WRITE IN THIS AREA
DO NOT WRITE IN THIS AREA
DO NOT WRITE IN THIS AREA

6 The diagram shows four stages in a human cell cycle.

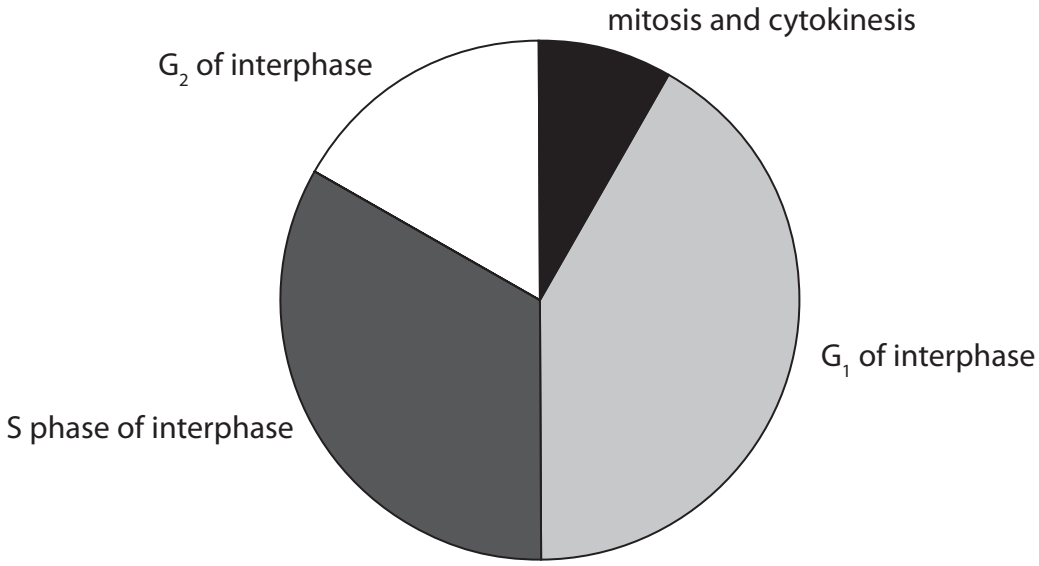

(a) The cell cycle time for this cell is 24 hours.

Give an estimate for the length of time that this cell spends in each of the four stages of the cell cycle.

(2)

Stage of cell cycle	**Estimate for the length of time that this cell spends in each stage / hours**
mitosis and cytokinesis	
G_1 of interphase	
S phase of interphase	
G_2 of interphase	

(b) The percentage of cells in any one stage is proportional to the length of time of that stage.

Describe an investigation that could be carried out to confirm the length of time of mitosis and cytokinesis for these human cells.

(4)

.....

.....

.....

.....

.....

DO NOT WRITE IN THIS AREA
DO NOT WRITE IN THIS AREA
DO NOT WRITE IN THIS AREA

DO NOT WRITE IN THIS AREA
DO NOT WRITE IN THIS AREA
DO NOT WRITE IN THIS AREA

(c) A cell in G_1 of interphase contains 68 arbitrary units of DNA.

Explain how the DNA content and the structure of the chromosomes of this cell will change during the cell cycle.

(5)

(Total for Question 6 = 11 marks)

7 The photograph shows sweet red peppers growing on a plant.

© Janet Horton / Alamy Stock Photo

Unripe sweet red peppers contain the enzyme catalase. As these peppers ripen, the activity of catalase decreases.

The equation summarises the reaction catalysed by catalase.

hydrogen peroxide ⟶ water + oxygen

(a) The diagram shows the structure of catalase.

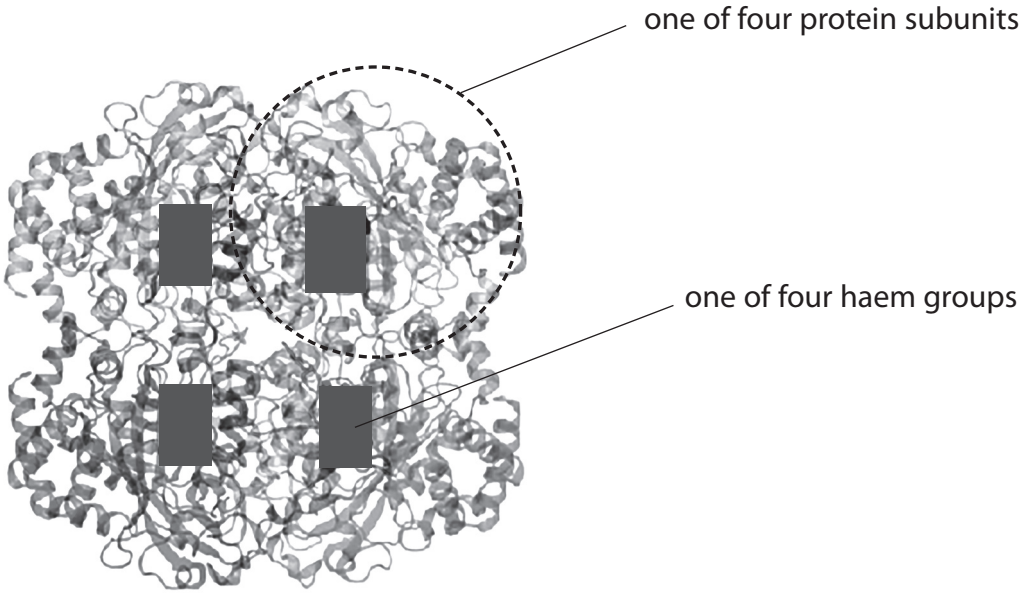

DO NOT WRITE IN THIS AREA
DO NOT WRITE IN THIS AREA
DO NOT WRITE IN THIS AREA

Explain why the enzyme catalase is described as having a tertiary and quaternary structure.

(3)

.....

.....

.....

.....

.....

.....

.....

.....

.....

DO NOT WRITE IN THIS AREA
DO NOT WRITE IN THIS AREA
DO NOT WRITE IN THIS AREA

(b) The activity of catalase can be measured by collecting the oxygen produced during the reaction.

The diagram shows apparatus that can be used to collect the oxygen produced.

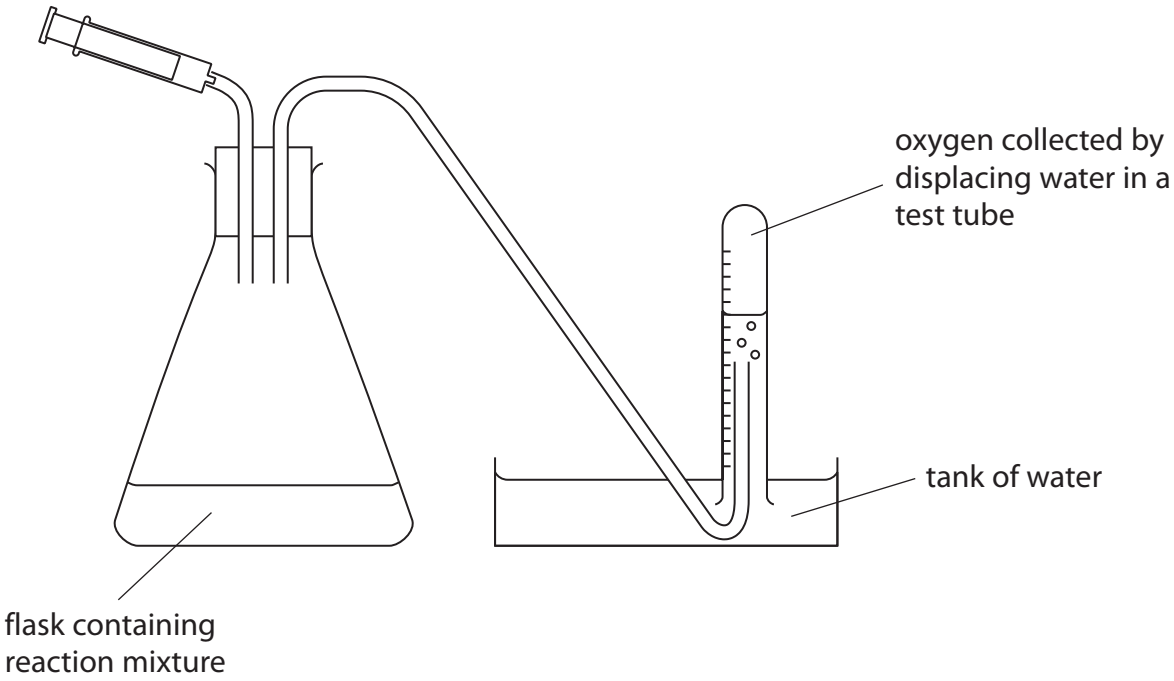

(i) When measuring the activity of enzymes, the initial rate of reaction should be measured.

Explain why the initial rate of reaction should be measured.

(2)

.....

.....

.....

.....

.....

.....

DO NOT WRITE IN THIS AREA
DO NOT WRITE IN THIS AREA
DO NOT WRITE IN THIS AREA

*(ii) Devise an investigation, using this apparatus, to show that as sweet red peppers ripen the activity of catalase decreases.

(6)

.....

.....

.....

.....

.....

.....

.....

.....

.....

.....

.....

.....

.....

.....

.....

.....

.....

.....

(Total for Question 7 = 11 marks)

DO NOT WRITE IN THIS AREA
DO NOT WRITE IN THIS AREA
DO NOT WRITE IN THIS AREA

8 In mammals, gametes are produced by spermatogenesis and oogenesis.

(a) The diagram shows some of the stages in spermatogenesis.

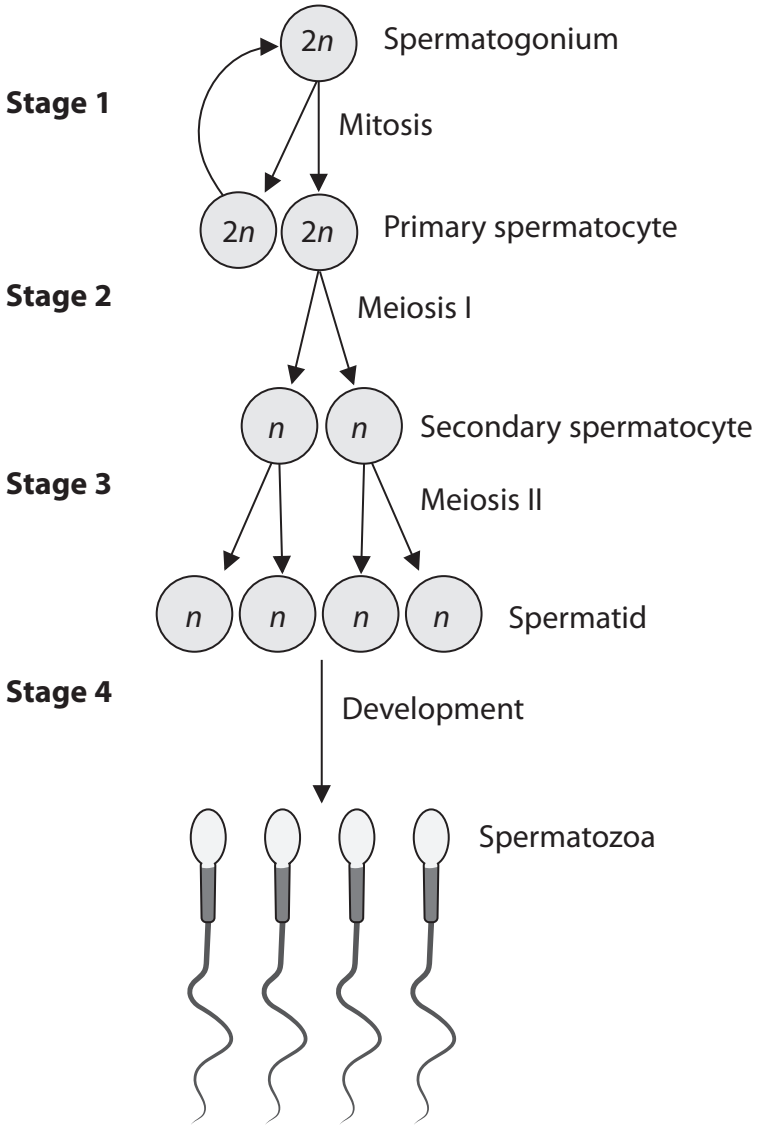

(i) Explain the significance of mitosis in stage 1 of spermatogenesis.

(2)

.....

.....

.....

.....

.....

.....

DO NOT WRITE IN THIS AREA
DO NOT WRITE IN THIS AREA
DO NOT WRITE IN THIS AREA

(ii) Explain the events that take place in stage 2, that result in genetic variation.

(4)

.....

.....

.....

.....

.....

.....

.....

.....

.....

.....

.....

.....

(iii) Compare and contrast the products of stage 2 and stage 3 in spermatogenesis with the products from these stages in oogenesis.

(3)

.....

.....

.....

.....

.....

.....

.....

.....

.....

DO NOT WRITE IN THIS AREA
DO NOT WRITE IN THIS AREA
DO NOT WRITE IN THIS AREA

(iv) Explain the importance of the acrosome that develops during stage 4.

(2)

.....

.....

.....

.....

.....

.....

DO NOT WRITE IN THIS AREA DO NOT WRITE IN THIS AREA DO NOT WRITE IN THIS AREA

(b) The effect of storage time on sperm was investigated.

The table shows some results of this investigation.

Storage time / hours	Percentage of sperm with structural defects (%)	Percentage of sperm that could swim (%)
0	8.2 ± 3.9	85.0 ± 5.7
6	9.5 ± 3.1	67.5 ± 11.0
12	18.0 ± 3.9	66.3 ± 7.5
18	21.3 ± 6.1	67.5 ± 2.8
24	19.5 ± 3.1	58.8 ± 8.5
30	26.5 ± 3.1	41.3 ± 7.5

Analyse the data to comment on conclusions that can be made from this investigation.

(4)

.....

.....

.....

.....

.....

.....

.....

.....

.....

.....

.....

.....

(Total for Question 8 = 15 marks)

TOTAL FOR PAPER = 80 MARKS

DO NOT WRITE IN THIS AREA
DO NOT WRITE IN THIS AREA
DO NOT WRITE IN THIS AREA

BLANK PAGE

DO NOT WRITE IN THIS AREA
DO NOT WRITE IN THIS AREA
DO NOT WRITE IN THIS AREA