Please check the examination details below before entering your candidate information

Candidate surname	Other names

Pearson Edexcel Level 3 GCE

Centre Number | Candidate Number

Friday 22 May 2020

Morning (Time: 1 hour 30 minutes) | Paper Reference **8BI0/02**

Biology B

Advanced Subsidiary
Paper 2: Core Physiology and Ecology

You must have:
Calculator, HB pencil, ruler

Total Marks

Instructions

- Use **black** ink or ball-point pen.
- **Fill in the boxes** at the top of this page with your name, centre number and candidate number.
- Answer **all** questions.
- Show your working in any calculation questions and include units in your answer.
- Answer the questions in the spaces provided – *there may be more space than you need.*
- You may use a scientific calculator.
- In question(s) marked with an **asterisk** (*), marks will be awarded for your ability to structure your answer logically, showing how the points that you make are related or follow from each other where appropriate.

Information

- The total mark for this paper is 80.
- The marks for **each** question are shown in brackets – *use this as a guide as to how much time to spend on each question.*

Advice

- Read each question carefully before you start to answer it.
- Try to answer every question.
- Check your answers if you have time at the end.

Turn over ▶

©2020 Pearson Education Ltd.
1/1/1/1/1/1/1/1/1/1/

P 6 2 3 0 5 A 0 1 2 4

Pearson

Answer ALL questions.

Write your answers in the spaces provided.

Some questions must be answered with a cross in a box ☒. If you change your mind about an answer, put a line through the box ☒ and then mark your new answer with a cross ☒.

1 The photograph shows blood cells as seen using a light microscope.

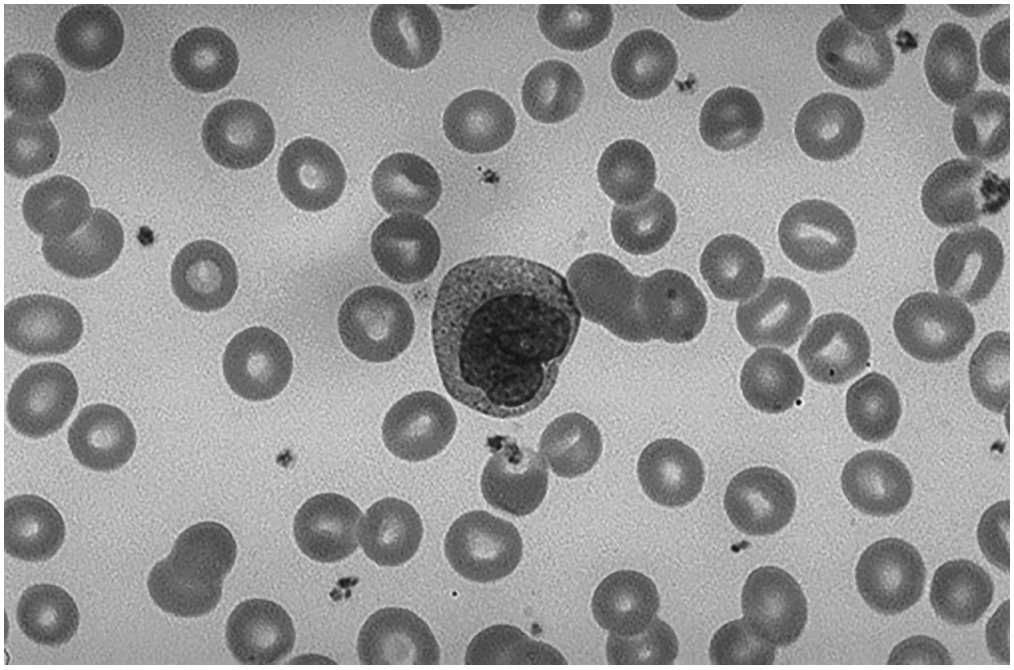

Source: Library.med.utah.edu

(a) Explain how the structures of erythrocytes and monocytes are related to their functions.

(3)

.....

.....

.....

.....

.....

.....

.....

.....

.....

DO NOT WRITE IN THIS AREA
DO NOT WRITE IN THIS AREA
DO NOT WRITE IN THIS AREA

(b) Blood is able to clot and prevent further blood loss from a cut.

Give **one** other function of blood clotting.

(1)

.....

.....

.....

(c) Doctors can measure the effectiveness of the clotting process using the prothrombin time test (PTT).

This test measures how long it takes for a sample of blood to clot.

Two groups of adults had their PTT recorded.

One group had liver disease and the other group was a healthy control.

The results are shown in the table.

Group	Mean PTT / seconds	Standard deviation / seconds
with liver disease	20.1	0.3
control	13.5	0.1

Analyse the data to deduce whether PTT is a useful indicator of liver disease.

(3)

.....

.....

.....

.....

.....

.....

.....

.....

.....

.....

(Total for Question 1 = 7 marks)

DO NOT WRITE IN THIS AREA
DO NOT WRITE IN THIS AREA
DO NOT WRITE IN THIS AREA

2 Substances move into and out of cells by different mechanisms.

(a) (i) Which of these mechanisms moves substances against a concentration gradient?

(1)

☒ **A** active transport

☒ **B** diffusion

☒ **C** facilitated diffusion

☒ **D** osmosis

(ii) Which of these mechanisms enables non-polar molecules to pass through cell membranes?

(1)

☒ **A** diffusion

☒ **B** facilitated diffusion

☒ **C** osmosis

☒ **D** transpiration

(b) Which of the following is usually found in a greater concentration in lymph than in blood?

(1)

☒ **A** fatty acids

☒ **B** glucose

☒ **C** haemoglobin

☒ **D** oxygen

(c) The size of an animal can affect gas exchange.

As animals increase in size, their

(1)

☒ **A** surface area decreases and volume increases

☒ **B** surface area to volume ratio decreases

☒ **C** surface area to volume ratio increases

☒ **D** surface area to volume ratio remains constant

DO NOT WRITE IN THIS AREA
DO NOT WRITE IN THIS AREA
DO NOT WRITE IN THIS AREA

(d) Explain the features of gas exchange surfaces that are common to both insects and mammals.

(4)

.....

.....

.....

.....

.....

.....

.....

.....

.....

.....

.....

.....

(Total for Question 2 = 8 marks)

DO NOT WRITE IN THIS AREA
DO NOT WRITE IN THIS AREA
DO NOT WRITE IN THIS AREA

3 The photograph shows a cross-section of a leaf from marram grass, *Ammophila arenaria*, as seen using a light microscope.

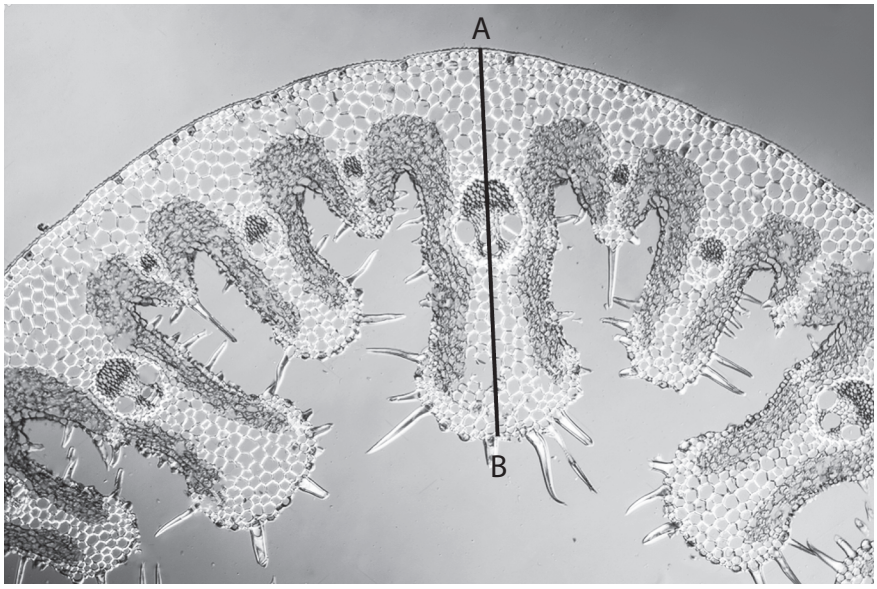

Source: © Dr. Norbert Lange/Shutterstock

Marram grass grows in sand dunes where little freshwater is available.

This plant has many adaptations that enable it to survive and grow in these conditions:

- leaves that are curved inwards
- leaves that have hairs
- stomata that are sunk in pits
- a thick waxy cuticle on the outside surface of the leaves

(a) State the genus to which marram grass belongs.

(1)

.....

(b) (i) The line AB shown on the actual leaf sample is 4 mm.

Calculate the magnification of the photograph.

(2)

Answer .....

DO NOT WRITE IN THIS AREA
DO NOT WRITE IN THIS AREA
DO NOT WRITE IN THIS AREA

(ii) Explain how **two** of these adaptations enable this plant to survive in dry sand.

(2)

.....

.....

.....

.....

.....

.....

(iii) Marram grass also contains extra xylem tissue that strengthens the leaves.

Explain why these plants need extra xylem in their leaves.

(2)

.....

.....

.....

.....

.....

.....

(c) Cells in the roots of marram grass have a very low water potential.

Explain how this adaptation enables the marram grass to survive in the sand dunes.

(2)

.....

.....

.....

.....

.....

.....

(Total for Question 3 = 9 marks)

DO NOT WRITE IN THIS AREA
DO NOT WRITE IN THIS AREA
DO NOT WRITE IN THIS AREA

4 Taxonomy is the branch of biology concerned with classifying organisms.

Scientists use a variety of methods to classify organisms into groups.

(a) Which of the following groups contains the largest number of different types of organism?

(1)

☒ **A** class

☒ **B** order

☒ **C** phylum

☒ **D** species

(b) Which of the following contributes to evolution by natural selection?

(1)

☒ **A** all organisms have enough resources to survive

☒ **B** individuals in the same population show little variation

☒ **C** individuals inherit acquired characteristics

☒ **D** organisms produce many more offspring than survive

(c) One definition of a species is a group of organisms that has similar features and

(1)

☒ **A** can mate to produce hybrid offspring

☒ **B** can produce fertile offspring

☒ **C** live in the same location

☒ **D** have no genetic variation

(d) Which molecules are separated using gel electrophoresis when classifying organisms?

(1)

☒ **A** DNA

☒ **B** lipids

☒ **C** polysaccharides

☒ **D** vitamins

DO NOT WRITE IN THIS AREA
DO NOT WRITE IN THIS AREA
DO NOT WRITE IN THIS AREA

(e) The photograph shows three head lice on human hair.

Source: www.shutterstock.com

Insecticides are used to control the spread of head lice.

However, commonly used insecticides have become less effective at reducing head lice populations.

(i) Explain why these insecticides have become less effective when used to treat head lice.

(4)

.....

.....

.....

.....

.....

.....

.....

.....

.....

.....

.....

.....

DO NOT WRITE IN THIS AREA
DO NOT WRITE IN THIS AREA
DO NOT WRITE IN THIS AREA

(ii) Explain how the use of insecticides could be changed to make the treatment more effective.

(3)

.....

.....

.....

.....

.....

.....

.....

.....

.....

(Total for Question 4 = 11 marks)

DO NOT WRITE IN THIS AREA
DO NOT WRITE IN THIS AREA
DO NOT WRITE IN THIS AREA

DO NOT WRITE IN THIS AREA
DO NOT WRITE IN THIS AREA
DO NOT WRITE IN THIS AREA

BLANK PAGE

5 Some animals have a single circulatory system and others have a double circulatory system.

(a) Compare and contrast single and double circulatory systems.

(3)

.....

.....

.....

.....

.....

.....

.....

.....

.....

DO NOT WRITE IN THIS AREA DO NOT WRITE IN THIS AREA DO NOT WRITE IN THIS AREA

(b) During exercise, the heart rate of a human increases and then takes time to return to resting rate after the exercise ends.

Devise an investigation to determine whether the sex of a person significantly affects the time taken for the heart rate to return to resting rate after exercise.

(4)

.....

.....

.....

.....

.....

.....

.....

.....

.....

.....

.....

.....

.....

.....

(Total for Question 5 = 7 marks)

DO NOT WRITE IN THIS AREA
DO NOT WRITE IN THIS AREA
DO NOT WRITE IN THIS AREA

6 A student investigated the effect of changes in turgor on plant tissue.

Equal sized pieces of potato were cut and attached to a ruler.

These pieces were immersed in different concentrations of sucrose solution and left for one hour.

The pieces were then removed from the solution and the turgor was determined as shown in the diagram.

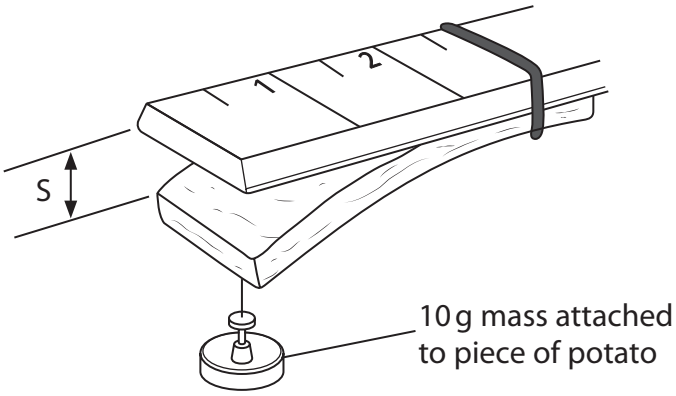

The distance (S) that each piece sagged from the ruler was measured.

The table shows the results of this investigation.

Concentration of sucrose solution / mol dm^{-3}	Mean distance S / mm
0.00	0.0
0.20	0.5
0.30	4.0
0.35	5.5
0.40	8.0
0.45	9.5
0.50	10.0
0.60	10.5

DO NOT WRITE IN THIS AREA
DO NOT WRITE IN THIS AREA
DO NOT WRITE IN THIS AREA

(a) (i) Plot a suitable graph to display the results of this investigation.

(3)

(ii) Calculate the mean change in the distance S in mm as the sucrose concentration changes from 0.2 to 0.4 mol dm^{-3}.

(2)

Answer .....mm per mol dm^{-3}

DO NOT WRITE IN THIS AREA
DO NOT WRITE IN THIS AREA
DO NOT WRITE IN THIS AREA

(iii) Analyse the data to explain the relationship between the concentration of sucrose and turgor in the pieces of potato.

(4)

.....

.....

.....

.....

.....

.....

.....

.....

.....

.....

.....

.....

.....

.....

(b) Criticise the method used to determine turgor in this investigation.

(2)

.....

.....

.....

.....

.....

.....

.....

(Total for Question 6 = 11 marks)

DO NOT WRITE IN THIS AREA
DO NOT WRITE IN THIS AREA
DO NOT WRITE IN THIS AREA

DO NOT WRITE IN THIS AREA
DO NOT WRITE IN THIS AREA
DO NOT WRITE IN THIS AREA

7 Increased blood pressure is one risk factor associated with atherosclerosis.

A study investigated the effect of aspirin on the risk of having a heart attack or a stroke.

In the study, which lasted 10 years, 12 000 adults with one or more risk factors for atherosclerosis were used.

The adults were split into two equal sized groups.

Each adult in one group was given 100 mg of aspirin every day and each adult in the other group was given a placebo.

The list shows the results of this study:

- 4.29% of the people who received aspirin died
- 4.48% of the people who received the placebo died
- there was no effect on the incidence of strokes
- people who took the aspirin experienced twice the bleeding into the digestive system compared with people in the placebo group
- the numbers of people with bleeding into the digestive system in both groups was low.

(a) (i) Explain how increased blood pressure increases the risk of atherosclerosis.

(4)

.....

.....

.....

.....

.....

.....

.....

.....

.....

.....

.....

.....

(ii) Describe how **three** factors, other than increased blood pressure, can increase the risk of atherosclerosis.

(3)

.....

.....

.....

.....

.....

.....

.....

.....

.....

.....

.....

(iii) Calculate the total number of people who died in this study.

(2)

Answer .....

DO NOT WRITE IN THIS AREA
DO NOT WRITE IN THIS AREA
DO NOT WRITE IN THIS AREA

(b) Discuss whether patients at risk of a heart attack or stroke should take a 100 mg dose of aspirin every day.

(5)

.....

.....

.....

.....

.....

.....

.....

.....

.....

.....

.....

.....

.....

.....

.....

(Total for Question 7 = 14 marks)

DO NOT WRITE IN THIS AREA
DO NOT WRITE IN THIS AREA
DO NOT WRITE IN THIS AREA

8 (a) Explain the difference between biodiversity within a habitat and biodiversity within a species.

(2)

.....

.....

.....

.....

.....

.....

.....

(b) Biodiversity can be measured by calculating an index of diversity.

The following data were collected from a freshwater pond in England.

Species	Number of individuals (n)
Mayfly nymph	80
Freshwater shrimp	23
Freshwater hoglouse	14
Beetle larvae	9

(i) Calculate the index of diversity (D) for this pond.
Use the formula

(3)

$$D = \frac{N(N-1)}{\Sigma n(n-1)}$$

Answer .....

DO NOT WRITE IN THIS AREA
DO NOT WRITE IN THIS AREA
DO NOT WRITE IN THIS AREA

(ii) A pond in a different area had a lower index of diversity.

Explain how the composition of this second community could have resulted in this lower index of diversity.

(2)

.....

.....

.....

.....

.....

.....

.....

DO NOT WRITE IN THIS AREA
DO NOT WRITE IN THIS AREA
DO NOT WRITE IN THIS AREA

*(c) Discuss the use of *in-situ* and *ex-situ* methods in the conservation of endangered species.

(6)

(Total for Question 8 = 13 marks)

TOTAL FOR PAPER = 80 MARKS

DO NOT WRITE IN THIS AREA
DO NOT WRITE IN THIS AREA
DO NOT WRITE IN THIS AREA

DO NOT WRITE IN THIS AREA
DO NOT WRITE IN THIS AREA
DO NOT WRITE IN THIS AREA

BLANK PAGE

BLANK PAGE

DO NOT WRITE IN THIS AREA
DO NOT WRITE IN THIS AREA
DO NOT WRITE IN THIS AREA