Cambridge Assessment International Education

# Cambridge IGCSE™

| CANDIDATE NAME | |
|---|---|

| CENTRE NUMBER | | | | | | CANDIDATE NUMBER | | | | |
|---|---|---|---|---|---|---|---|---|---|---|

**COMBINED SCIENCE** **0653/51**

Paper 5 Practical Test **October/November 2021**

**1 hour 15 minutes**

You must answer on the question paper.

You will need: The materials and apparatus listed in the confidential instructions

**INSTRUCTIONS**

- Answer **all** questions.
- Use a black or dark blue pen. You may use an HB pencil for any diagrams or graphs.
- Write your name, centre number and candidate number in the boxes at the top of the page.
- Write your answer to each question in the space provided.
- Do **not** use an erasable pen or correction fluid.
- Do **not** write on any bar codes.
- You may use a calculator.
- You should show all your working and use appropriate units.

**INFORMATION**

- The total mark for this paper is 40.
- The number of marks for each question or part question is shown in brackets [ ].
- Notes for use in qualitative analysis are provided in the question paper.

| For Examiner's Use | |
|---|---|
| 1 | |
| 2 | |
| 3 | |
| 4 | |
| Total | |

This document has **16** pages. Any blank pages are indicated.

DC (CE/FC) 210657/4
© UCLES 2021

**1** **(a)** Fig. 1.1 shows two animals, one from a cold climate and one from a hot climate.

**cold climate** **hot climate**

**Fig. 1.1**

The animal from the cold climate is much larger than the animal from the hot climate.

Identify **two** other visible differences which can be seen in Fig. 1.1.

1 .....

.....

2 .....

.....
[2]

**(b)** You are going to investigate heat loss in animals of different sizes.

Two beakers of different sizes will represent the animals:

- A large 250 $cm^3$ beaker will represent a large animal.
- A small 50 $cm^3$ beaker will represent a small animal.

**(i) Procedure**

- Carefully clamp a thermometer in the **large** beaker as shown in Fig. 1.2.

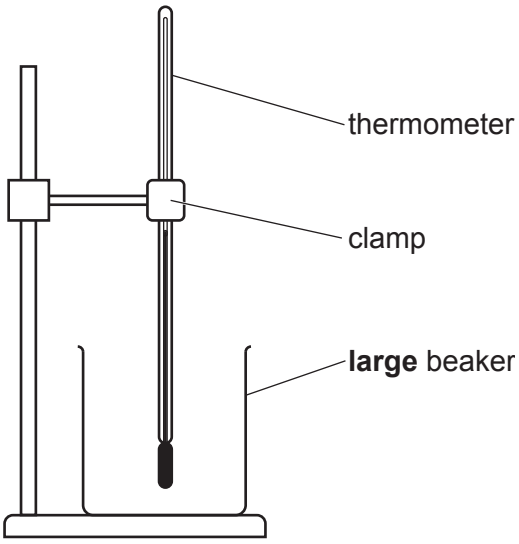


**Fig. 1.2**

- Ask for hot water to be added to the **large** beaker.
- Wait for the reading on the thermometer to stop rising.
- Record this temperature in Table 1.1 at time = 0 seconds.
- Start the stop-watch.
- Record in Table 1.1 the temperature of the water every 60 seconds for 300 seconds.

**Table 1.1**

| time / seconds | temperature of water in **large** beaker / °C | temperature of water in **small** beaker / °C |
|---|---|---|
| 0 | | |
| 60 | | |
| 120 | | |
| 180 | | |
| 240 | | |
| 300 | | |

[2]

**(ii)** You are now going to use the **small** 50 $cm^3$ beaker.

- Remove the thermometer from the large beaker.
- Replace the large beaker with the **small** empty beaker.
- Repeat the procedure using the **small** beaker instead of the large beaker.

Record in Table 1.1 the temperature of the water in the **small** beaker every 60 seconds for 300 seconds.

[2]

**(c)** Calculate the temperature decrease of the water in **each** beaker.

Use the equation shown.

temperature decrease = (temperature at 0 seconds) – (temperature at 300 seconds)

temperature decrease in **large** beaker = ..... °C

temperature decrease in **small** beaker = ..... °C

[1]

**(d)** You are going to plot a graph of temperature against time for **both** beakers **on the same axes**.

- Use a scale for the temperature axis that is suitable for **both** beakers. You do **not** need to start the scale at zero.
- Plot the points for the **large** beaker.
- Draw the smooth best-fit curve. Label this curve **L**.
- Plot the points for the **small** beaker.
- Draw the smooth best-fit curve. Label this curve **S**.

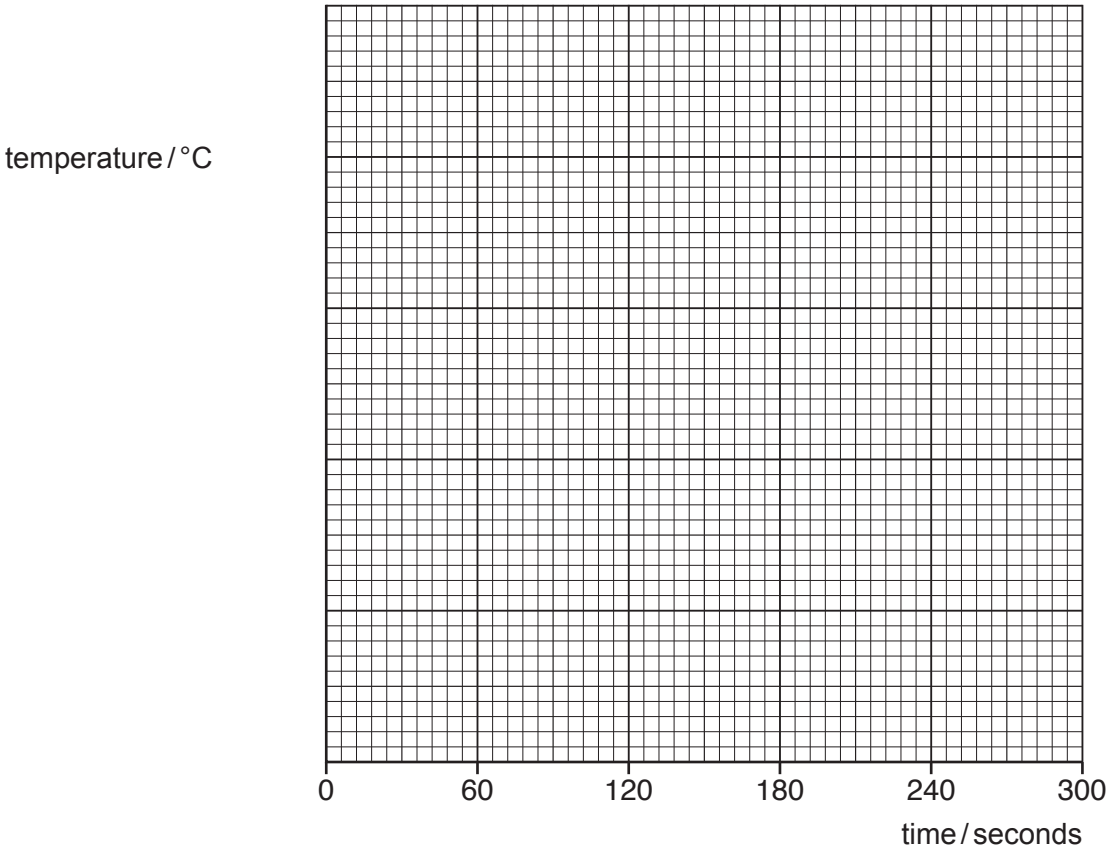


[4]

**(e)** Suggest which animal, large or small, loses heat more quickly.

Explain your choice using your answers to **(c)** and **(d)**.

animal .....

explanation .....

.....

[1]

**(f)** Suggest **one** improvement to the procedure which gives a fairer comparison of the rate of heat loss from the beakers.

.....

..... [1]

[Total: 13]

**2** You are going to prepare a sample of copper(II) sulfate solution.

You will react a sample of solid copper(II) carbonate with dilute sulfuric acid.

**(a) Procedure**

- Use a measuring cylinder to measure 20 $cm^3$ of dilute sulfuric acid.
- Pour the dilute sulfuric acid into the glass beaker.
- Add a spatula of copper(II) carbonate to the dilute sulfuric acid.
- Stir the mixture with a glass rod for approximately 30 seconds.

Describe your observations of what happens in the beaker when the copper(II) carbonate reacts with the dilute sulfuric acid.

.....

.....

.....

..... [2]

**(b)**
- Add another spatula of copper(II) carbonate to the reaction mixture in the beaker and stir the mixture for approximately 30 seconds.
- If all the copper(II) carbonate reacts fully, add more copper(II) carbonate and stir again.
- Keep adding copper(II) carbonate until no more reacts. There will be solid copper(II) carbonate left in the beaker.
- Filter some of the mixture into a test-tube.
- Collect at least 3 cm depth of filtrate. Keep this for the tests in **(c)**.
- While the mixture filters, write your answers to **(b)(i)**, **(b)(ii)** and **(b)(iii)**.

**(i)** Describe the appearance of the filtrate in the test-tube.

.....

..... [1]

**(ii)** Describe, in detail, how to make large crystals of copper(II) sulfate from the filtrate.

.....

.....

.....

.....

.....

..... [3]

**(iii)** Describe the appearance of the residue in the filter paper.

.....

..... [1]

**(c)** Place 2 cm depth of filtrate into a clean test-tube.

**(i)** Add 10 drops of aqueous potassium iodide to the filtrate in the test-tube.

Describe your observations.

.....

..... [1]

**(ii)** Add 4 cm depth of aqueous sodium thiosulfate to the mixture in **(c)(i)**.

Describe your observations.

.....

.....

.....

..... [2]

**(d)** A student does a flame test.

The student:

- cleans a flame test wire
- dips the flame test wire into a sample of solid copper(II) sulfate
- places the wire in the top of a blue Bunsen burner flame
- observes a blue-green and yellow flame.

**(i)** Suggest why the student cleans the flame test wire.

.....

..... [1]

**(ii)** Explain why the student thinks the sample of copper(II) sulfate is **not** pure.

.....

..... [1]

**(iii)** Suggest why it is important to use a blue Bunsen burner flame rather than a yellow Bunsen burner flame in the flame test.

.....

..... [1]

[Total: 13]

**BLANK PAGE**

**3** You are going to determine the density of a cork.

**(a)** Use the balance to measure the mass of the cork.

Record the mass to the nearest 0.1 g.

mass = ..... g [1]

**(b)** You are going to determine the volume of the cork using the method of displacement.

**Procedure**

Fig. 3.1 shows the three steps in the procedure.

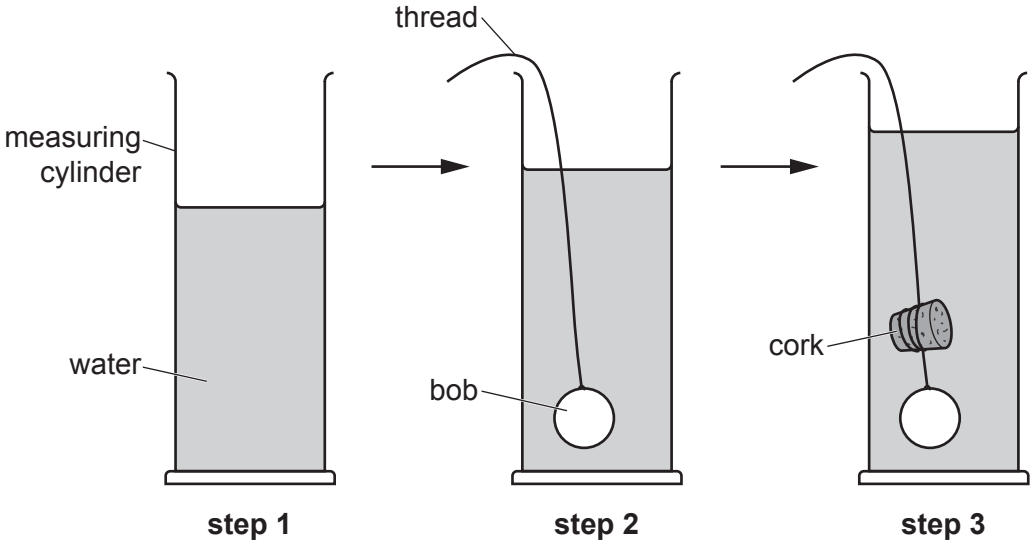


**Fig. 3.1**

**step 1**

- Add 70 $cm^3$ of water to the measuring cylinder.

**step 2**

- Holding the thread, carefully lower the bob into the water in the measuring cylinder until the bob is completely under water.

**(i)** Record the total volume of the water and bob.

volume of water and bob = ..... $cm^3$ [1]

**step 3**

- Remove the bob from the water.
- Make sure that the volume of water in the measuring cylinder is 70 $cm^3$.
- Use the thread to attach and secure the cork close to the bob, as shown in Fig. 3.1.
- Carefully lower the bob and cork into the water in the measuring cylinder until the bob and cork are completely under water.

**(ii)** Record the total volume of the water, bob and cork.

volume of water, bob and cork = ..... $cm^3$ [1]

**(iii)** Use your answers to **(b)(i)** and **(b)(ii)** to calculate the volume of the cork.

Use the equation shown.

volume of cork = (volume of water, bob and cork) – (volume of water and bob)

volume of cork = ..... $cm^3$ [1]

**(c)** Calculate the density of the cork. Use the equation shown.

$$\text{density} = \frac{\text{mass}}{\text{volume}}$$

Give your answer to **two** significant figures.

density of cork = ..... $g/cm^3$ [2]

**(d)** Cork floats on water.

Suggest why the bob is needed in this experiment.

.....

..... [1]

[Total: 7]

**4** A student has clothes made of three different materials: cotton, polyester and wool.

After washing the clothes, the student observes the wet clothes becoming dry as the water evaporates.

The student wants to know if the material of the clothes affects the rate at which the water evaporates.

Plan an investigation to determine how the **material** of the clothes affects the **rate of evaporation** of water from the clothes.

You are provided with:

- samples of cotton, polyester and wool
- water

You may use any common laboratory apparatus in your plan.

**You are not required to do this investigation.**

Include in your plan:

- the apparatus needed
- a brief description of the method, explaining any safety precautions you will take
- what you will measure
- which variables you will keep constant
- how you will process your results to draw a conclusion.

You may include a labelled diagram.

You may include a results table (you are not required to enter any readings in the table).

.....

.....

.....

.....

.....

.....

.....

.....

.....

.....

.....

.....

.....

..... [7]

**BLANK PAGE**

**BLANK PAGE**

## NOTES FOR USE IN QUALITATIVE ANALYSIS

### Tests for anions

| anion | test | test result |
|---|---|---|
| carbonate ($CO_3^{2-}$) | add dilute acid | effervescence, carbon dioxide produced |
| chloride ($Cl^-$) [in solution] | acidify with dilute nitric acid, then add aqueous silver nitrate | white ppt. |
| nitrate ($NO_3^-$) [in solution] | add aqueous sodium hydroxide then aluminium foil; warm carefully | ammonia produced |
| sulfate ($SO_4^{2-}$) [in solution] | acidify, then add aqueous barium nitrate | white ppt. |

### Tests for aqueous cations

| cation | effect of aqueous sodium hydroxide | effect of aqueous ammonia |
|---|---|---|
| ammonium ($NH_4^+$) | ammonia produced on warming | – |
| calcium ($Ca^{2+}$) | white ppt., insoluble in excess | no ppt., or very slight white ppt. |
| copper ($Cu^{2+}$) | light blue ppt., insoluble in excess | light blue ppt., soluble in excess, giving a dark blue solution |
| iron(II) ($Fe^{2+}$) | green ppt., insoluble in excess | green ppt., insoluble in excess |
| iron(III) ($Fe^{3+}$) | red-brown ppt., insoluble in excess | red-brown ppt., insoluble in excess |
| zinc ($Zn^{2+}$) | white ppt., soluble in excess, giving a colourless solution | white ppt., soluble in excess, giving a colourless solution |

### Tests for gases

| gas | test and test result |
|---|---|
| ammonia ($NH_3$) | turns damp, red litmus paper blue |
| carbon dioxide ($CO_2$) | turns limewater milky |
| chlorine ($Cl_2$) | bleaches damp litmus paper |
| hydrogen ($H_2$) | ‘pops’ with a lighted splint |
| oxygen ($O_2$) | relights a glowing splint |

### Flame tests for metal ions

| metal ion | flame colour |
|---|---|
| lithium ($Li^+$) | red |
| sodium ($Na^+$) | yellow |
| potassium ($K^+$) | lilac |
| copper(II) ($Cu^{2+}$) | blue-green |

Permission to reproduce items where third-party owned material protected by copyright is included has been sought and cleared where possible. Every reasonable effort has been made by the publisher (UCLES) to trace copyright holders, but if any items requiring clearance have unwittingly been included, the publisher will be pleased to make amends at the earliest possible opportunity.

To avoid the issue of disclosure of answer-related information to candidates, all copyright acknowledgements are reproduced online in the Cambridge Assessment International Education Copyright Acknowledgements Booklet. This is produced for each series of examinations and is freely available to download at www.cambridgeinternational.org after the live examination series.

Cambridge Assessment International Education is part of the Cambridge Assessment Group. Cambridge Assessment is the brand name of the University of Cambridge Local Examinations Syndicate (UCLES), which itself is a department of the University of Cambridge.

© UCLES 2021

Cambridge Assessment International Education

# Cambridge IGCSE™

| CANDIDATE NAME | |
|---|---|

| CENTRE NUMBER | | | | | | CANDIDATE NUMBER | | | | |
|---|---|---|---|---|---|---|---|---|---|---|

**COMBINED SCIENCE** **0653/52**

Paper 5 Practical Test **October/November 2021**

**1 hour 15 minutes**

You must answer on the question paper.

You will need: The materials and apparatus listed in the confidential instructions

**INSTRUCTIONS**

- Answer **all** questions.
- Use a black or dark blue pen. You may use an HB pencil for any diagrams or graphs.
- Write your name, centre number and candidate number in the boxes at the top of the page.
- Write your answer to each question in the space provided.
- Do **not** use an erasable pen or correction fluid.
- Do **not** write on any bar codes.
- You may use a calculator.
- You should show all your working and use appropriate units.

**INFORMATION**

- The total mark for this paper is 40.
- The number of marks for each question or part question is shown in brackets [ ].
- Notes for use in qualitative analysis are provided in the question paper.

| For Examiner's Use | |
|---|---|
| 1 | |
| 2 | |
| 3 | |
| 4 | |
| Total | |

This document has **16** pages. Any blank pages are indicated.

DC (SLM) 220185
© UCLES 2021

**1** **(a)** Fig. 1.1 shows two animals, one from a cold climate and one from a hot climate.

**cold climate** **hot climate**

**Fig. 1.1**

The animal from the cold climate is much larger than the animal from the hot climate.

Identify **two** other visible differences which can be seen in Fig. 1.1.

1 .....

.....

2 .....

.....
[2]

**(b)** You are going to investigate heat loss in animals of different sizes.

Two beakers of different sizes will represent the animals:

- A large 250 $cm^3$ beaker will represent a large animal.
- A small 50 $cm^3$ beaker will represent a small animal.

**(i) Procedure**

- Carefully clamp a thermometer in the **large** beaker as shown in Fig. 1.2.

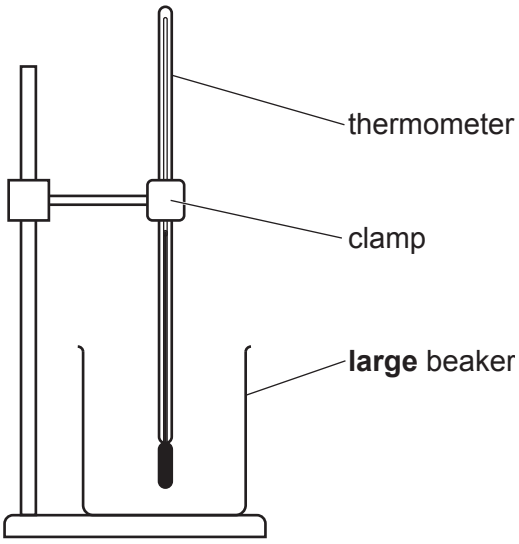


**Fig. 1.2**

- Ask for hot water to be added to the **large** beaker.
- Wait for the reading on the thermometer to stop rising.
- Record this temperature in Table 1.1 at time = 0 seconds.
- Start the stop-watch.
- Record in Table 1.1 the temperature of the water every 60 seconds for 300 seconds.

**Table 1.1**

| time / seconds | temperature of water in **large** beaker / °C | temperature of water in **small** beaker / °C |
|---|---|---|
| 0 | | |
| 60 | | |
| 120 | | |
| 180 | | |
| 240 | | |
| 300 | | |

[2]

**(ii)** You are now going to use the **small** 50 $cm^3$ beaker.

- Remove the thermometer from the large beaker.
- Replace the large beaker with the **small** empty beaker.
- Repeat the procedure using the **small** beaker instead of the large beaker.

Record in Table 1.1 the temperature of the water in the **small** beaker every 60 seconds for 300 seconds.

[2]

**(c)** Calculate the temperature decrease of the water in **each** beaker.

Use the equation shown.

temperature decrease = (temperature at 0 seconds) – (temperature at 300 seconds)

temperature decrease in **large** beaker = ..... °C

temperature decrease in **small** beaker = ..... °C

[1]

**(d)** You are going to plot a graph of temperature against time for **both** beakers **on the same axes**.

- Use a scale for the temperature axis that is suitable for **both** beakers. You do **not** need to start the scale at zero.
- Plot the points for the **large** beaker.
- Draw the smooth best-fit curve. Label this curve **L**.
- Plot the points for the **small** beaker.
- Draw the smooth best-fit curve. Label this curve **S**.

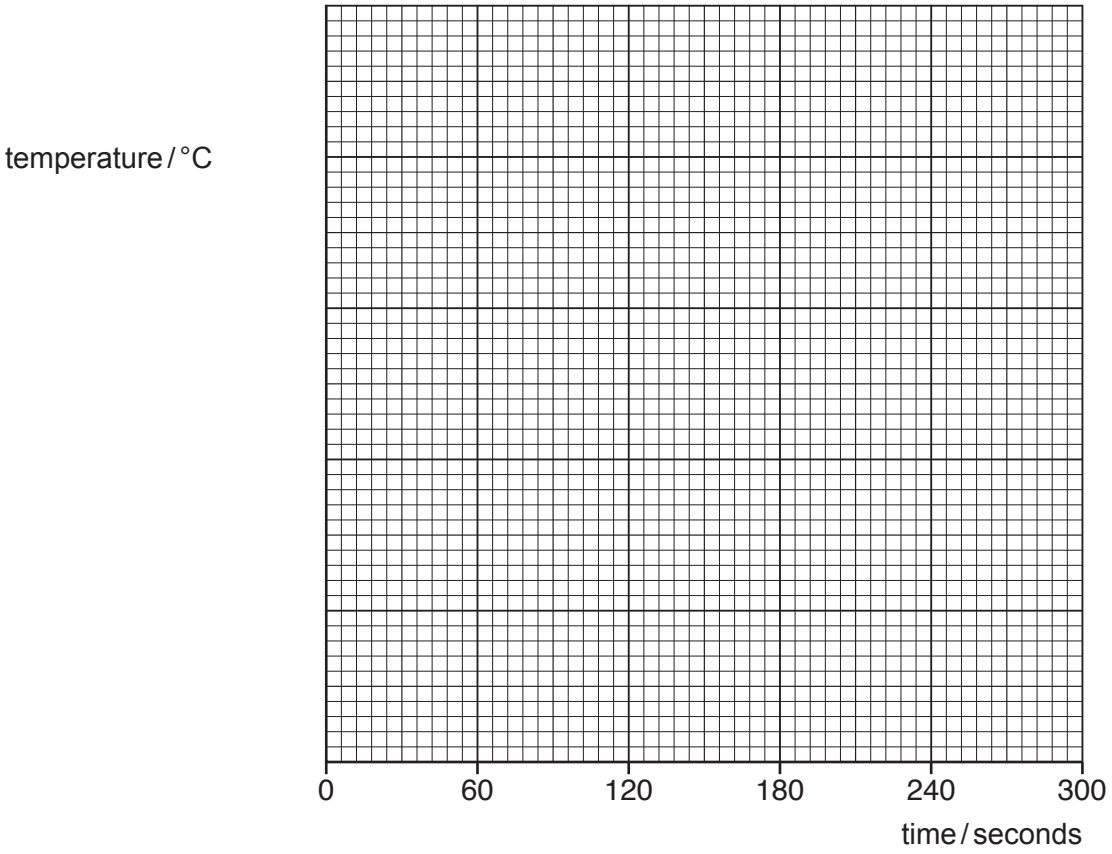


[4]

**(e)** Suggest which animal, large or small, loses heat more quickly.

Explain your choice using your answers to **(c)** and **(d)**.

animal .....

explanation .....

.....

[1]

**(f)** Suggest **one** improvement to the procedure which gives a fairer comparison of the rate of heat loss from the beakers.

.....

..... [1]

[Total: 13]

**2** You are going to prepare a sample of copper(II) sulfate solution.

You will react a sample of solid copper(II) carbonate with dilute sulfuric acid.

**(a) Procedure**

- Use a measuring cylinder to measure 20 $cm^3$ of dilute sulfuric acid.
- Pour the dilute sulfuric acid into the glass beaker.
- Add a spatula of copper(II) carbonate to the dilute sulfuric acid.
- Stir the mixture with a glass rod for approximately 30 seconds.

Describe your observations of what happens in the beaker when the copper(II) carbonate reacts with the dilute sulfuric acid.

.....

.....

.....

..... [2]

**(b)**
- Add another spatula of copper(II) carbonate to the reaction mixture in the beaker and stir the mixture for approximately 30 seconds.
- If all the copper(II) carbonate reacts fully, add more copper(II) carbonate and stir again.
- Keep adding copper(II) carbonate until no more reacts. There will be solid copper(II) carbonate left in the beaker.
- Filter some of the mixture into a test-tube.
- Collect at least 3 cm depth of filtrate. Keep this for the tests in **(c)**.
- While the mixture filters, write your answers to **(b)(i)**, **(b)(ii)** and **(b)(iii)**.

**(i)** Describe the appearance of the filtrate in the test-tube.

.....

..... [1]

**(ii)** Describe, in detail, how to make large crystals of copper(II) sulfate from the filtrate.

.....

.....

.....

.....

.....

..... [3]

**(iii)** Describe the appearance of the residue in the filter paper.

.....

..... [1]

**(c)** Place 2 cm depth of filtrate into a clean test-tube.

**(i)** Add 10 drops of aqueous potassium iodide to the filtrate in the test-tube.

Describe your observations.

.....

..... [1]

**(ii)** Add 4 cm depth of aqueous sodium thiosulfate to the mixture in **(c)(i)**.

Describe your observations.

.....

.....

.....

..... [2]

**(d)** A student does a flame test.

The student:

- cleans a flame test wire
- dips the flame test wire into a sample of solid copper(II) sulfate
- places the wire in the top of a blue Bunsen burner flame
- observes a blue-green and yellow flame.

**(i)** Suggest why the student cleans the flame test wire.

.....

..... [1]

**(ii)** Explain why the student thinks the sample of copper(II) sulfate is **not** pure.

.....

..... [1]

**(iii)** Suggest why it is important to use a blue Bunsen burner flame rather than a yellow Bunsen burner flame in the flame test.

.....

..... [1]

[Total: 13]

**BLANK PAGE**

**3** You are going to determine the density of a cork.

**(a)** Use the balance to measure the mass of the cork.

Record the mass to the nearest 0.1 g.

mass = ..... g [1]

**(b)** You are going to determine the volume of the cork using the method of displacement.

**Procedure**

Fig. 3.1 shows the three steps in the procedure.

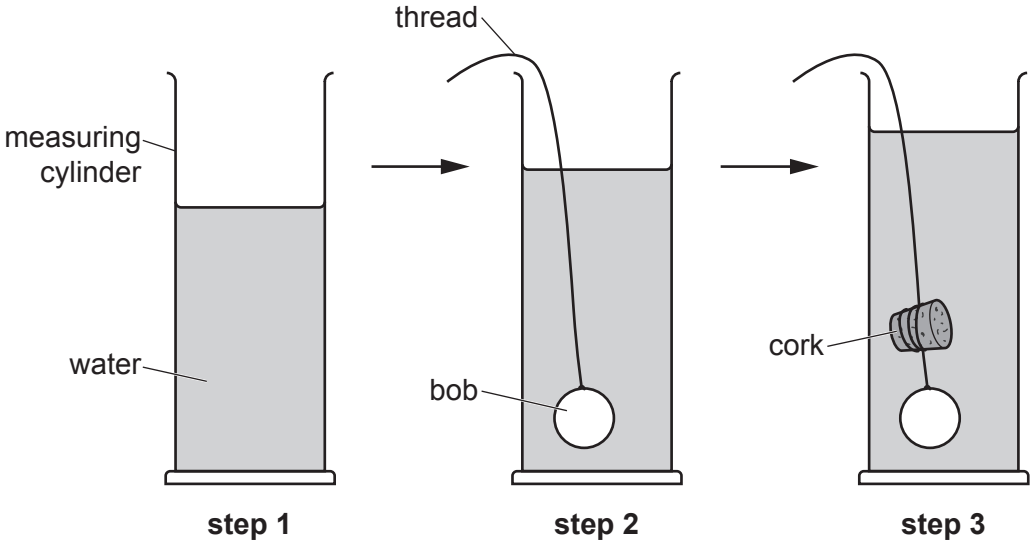


**Fig. 3.1**

**step 1**

- Add 70 $cm^3$ of water to the measuring cylinder.

**step 2**

- Holding the thread, carefully lower the bob into the water in the measuring cylinder until the bob is completely under water.

**(i)** Record the total volume of the water and bob.

volume of water and bob = ..... $cm^3$ [1]

**step 3**

- Remove the bob from the water.
- Make sure that the volume of water in the measuring cylinder is 70 $cm^3$.
- Use the thread to attach and secure the cork close to the bob, as shown in Fig. 3.1.
- Carefully lower the bob and cork into the water in the measuring cylinder until the bob and cork are completely under water.

**(ii)** Record the total volume of the water, bob and cork.

volume of water, bob and cork = ..... $cm^3$ [1]

**(iii)** Use your answers to **(b)(i)** and **(b)(ii)** to calculate the volume of the cork.

Use the equation shown.

volume of cork = (volume of water, bob and cork) – (volume of water and bob)

volume of cork = ..... $cm^3$ [1]

**(c)** Calculate the density of the cork. Use the equation shown.

$$\text{density} = \frac{\text{mass}}{\text{volume}}$$

Give your answer to **two** significant figures.

density of cork = ..... $g/cm^3$ [2]

**(d)** Cork floats on water.

Suggest why the bob is needed in this experiment.

.....

..... [1]

[Total: 7]

**4** A student has clothes made of three different materials: cotton, polyester and wool.

After washing the clothes, the student observes the wet clothes becoming dry as the water evaporates.

The student wants to know if the material of the clothes affects the rate at which the water evaporates.

Plan an investigation to determine how the **material** of the clothes affects the **rate of evaporation** of water from the clothes.

You are provided with:

- samples of cotton, polyester and wool
- water

You may use any common laboratory apparatus in your plan.

**You are not required to do this investigation.**

Include in your plan:

- the apparatus needed
- a brief description of the method, explaining any safety precautions you will take
- what you will measure
- which variables you will keep constant
- how you will process your results to draw a conclusion.

You may include a labelled diagram.

You may include a results table (you are not required to enter any readings in the table).

.....

.....

.....

.....

.....

.....

.....

.....

.....

.....

.....

.....

.....

..... [7]

**BLANK PAGE**

**BLANK PAGE**

## NOTES FOR USE IN QUALITATIVE ANALYSIS

### Tests for anions

| anion | test | test result |
|---|---|---|
| carbonate ($CO_3^{2-}$) | add dilute acid | effervescence, carbon dioxide produced |
| chloride ($Cl^-$) [in solution] | acidify with dilute nitric acid, then add aqueous silver nitrate | white ppt. |
| nitrate ($NO_3^-$) [in solution] | add aqueous sodium hydroxide then aluminium foil; warm carefully | ammonia produced |
| sulfate ($SO_4^{2-}$) [in solution] | acidify, then add aqueous barium nitrate | white ppt. |

### Tests for aqueous cations

| cation | effect of aqueous sodium hydroxide | effect of aqueous ammonia |
|---|---|---|
| ammonium ($NH_4^+$) | ammonia produced on warming | – |
| calcium ($Ca^{2+}$) | white ppt., insoluble in excess | no ppt., or very slight white ppt. |
| copper ($Cu^{2+}$) | light blue ppt., insoluble in excess | light blue ppt., soluble in excess, giving a dark blue solution |
| iron(II) ($Fe^{2+}$) | green ppt., insoluble in excess | green ppt., insoluble in excess |
| iron(III) ($Fe^{3+}$) | red-brown ppt., insoluble in excess | red-brown ppt., insoluble in excess |
| zinc ($Zn^{2+}$) | white ppt., soluble in excess, giving a colourless solution | white ppt., soluble in excess, giving a colourless solution |

### Tests for gases

| gas | test and test result |
|---|---|
| ammonia ($NH_3$) | turns damp, red litmus paper blue |
| carbon dioxide ($CO_2$) | turns limewater milky |
| chlorine ($Cl_2$) | bleaches damp litmus paper |
| hydrogen ($H_2$) | 'pops' with a lighted splint |
| oxygen ($O_2$) | relights a glowing splint |

### Flame tests for metal ions

| metal ion | flame colour |
|---|---|
| lithium ($Li^+$) | red |
| sodium ($Na^+$) | yellow |
| potassium ($K^+$) | lilac |
| copper(II) ($Cu^{2+}$) | blue-green |

Permission to reproduce items where third-party owned material protected by copyright is included has been sought and cleared where possible. Every reasonable effort has been made by the publisher (UCLES) to trace copyright holders, but if any items requiring clearance have unwittingly been included, the publisher will be pleased to make amends at the earliest possible opportunity.

To avoid the issue of disclosure of answer-related information to candidates, all copyright acknowledgements are reproduced online in the Cambridge Assessment International Education Copyright Acknowledgements Booklet. This is produced for each series of examinations and is freely available to download at www.cambridgeinternational.org after the live examination series.

Cambridge Assessment International Education is part of the Cambridge Assessment Group. Cambridge Assessment is the brand name of the University of Cambridge Local Examinations Syndicate (UCLES), which itself is a department of the University of Cambridge.

© UCLES 2021