Cambridge Assessment International Education

Cambridge International AS & A Level

CANDIDATE NAME	

CENTRE NUMBER						CANDIDATE NUMBER				

PHYSICS **9702/31**

Paper 3 Advanced Practical Skills 1 **October/November 2022**

2 hours

You must answer on the question paper.

You will need: The materials and apparatus listed in the confidential instructions

INSTRUCTIONS

- Answer **all** questions.
- Use a black or dark blue pen. You may use an HB pencil for any diagrams or graphs.
- Write your name, centre number and candidate number in the boxes at the top of the page.
- Write your answer to each question in the space provided.
- Do **not** use an erasable pen or correction fluid.
- Do **not** write on any bar codes.
- You will be allowed to work with the apparatus for a maximum of 1 hour for each question.
- You should record all your observations in the spaces provided in the question paper as soon as these observations are made.
- You may use a calculator.
- You should show all your working and use appropriate units.

INFORMATION

- The total mark for this paper is 40.
- The number of marks for each question or part question is shown in brackets [ ].

For Examiner's Use	
1	
2	
Total	

This document has **12** pages.

DC (RW/SW) 302772/2
© UCLES 2022

You may not need to use all of the materials provided.

1 In this experiment, you will investigate oscillations of card shapes.

(a) You have been provided with a circular card of radius 10.0 cm.

- Draw a circle on the card of radius 9.0 cm, as shown in Fig. 1.1.

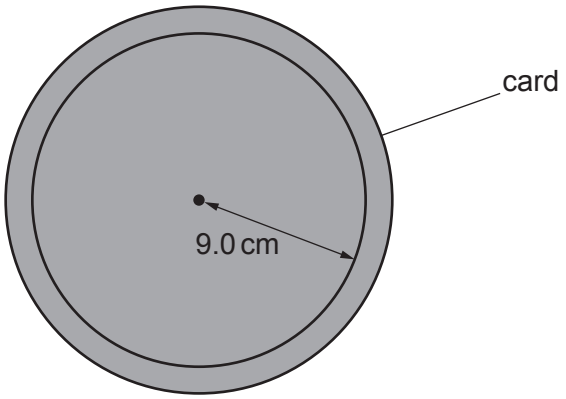

Fig. 1.1 (not to scale)

- Fold the card in half. Cut carefully along the line, as shown in Fig. 1.2, and keep both parts of the card.

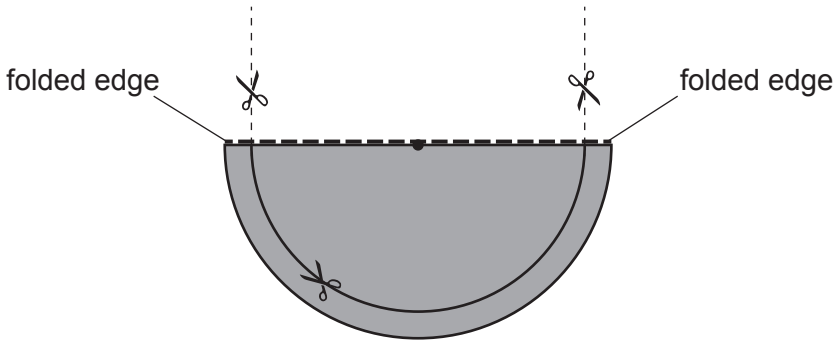

Fig. 1.2 (not to scale)

- The distance between the centre of one side of the card shape and the centre of the other side is *d*, as shown in Fig. 1.3.

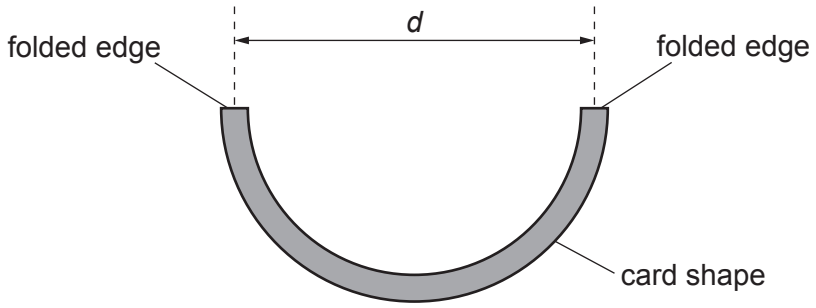

Fig. 1.3

Measure and record *d*.

d = ... [1]

(b) • Stand the card shape on the bench.

- Adjust the loops of card until the distance between the points where the loops touch the bench is approximately 3 cm, as shown in Fig. 1.4.

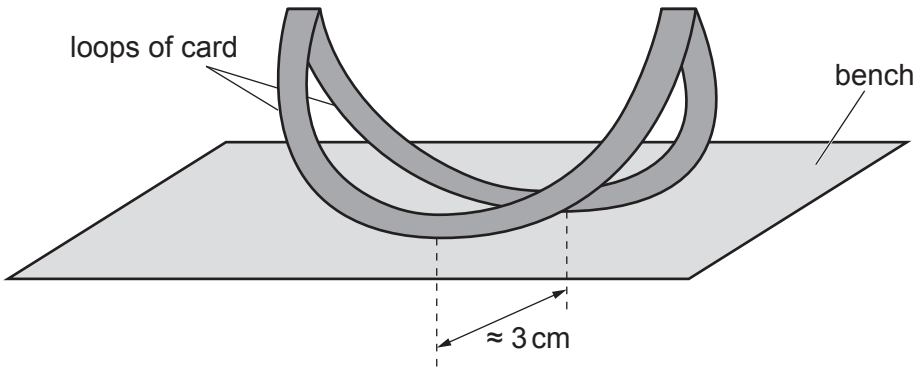

Fig. 1.4

- Gently press down one side of the card shape through a short distance. Release the card shape so that it oscillates.

- Determine the period *T* of these oscillations.

T = ... [2]

(c) Use the remaining card to cut out shapes of smaller radius, each with the same width of 1.0 cm.
For each card shape, measure d and repeat **(b)**. Repeat until you have five sets of values of d and T.

Record your results in a table. Include values of T^2 in your table.

[8]

(d) **(i)** Plot a graph of T^2 on the y-axis against d on the x-axis. [3]

(ii) Draw the straight line of best fit. [1]

(iii) Determine the gradient and y-intercept of this line.

gradient = ...

y-intercept = ...
[2]

(e) It is suggested that the quantities T and d are related by the equation

$$T^2 = Ad + B$$

where A and B are constants.

Using your answers in **(d)(iii)**, determine the values of A and B.
Give appropriate units.

A = ...

B = ...
[2]

(f) Theory suggests that

$$A = \frac{2\pi^2}{g}$$

where g is the acceleration of free fall.

Use your value of A in **(e)** to determine a value for g.
Give an appropriate unit.

g = ... [1]

[Total: 20]

You may not need to use all of the materials provided.

2 In this experiment, you will investigate the collision of two pendulums.

(a) (i) • Mould the two pieces of modelling clay onto the ends of the **shorter** strings to make two pendulums, as shown in Fig. 2.1.

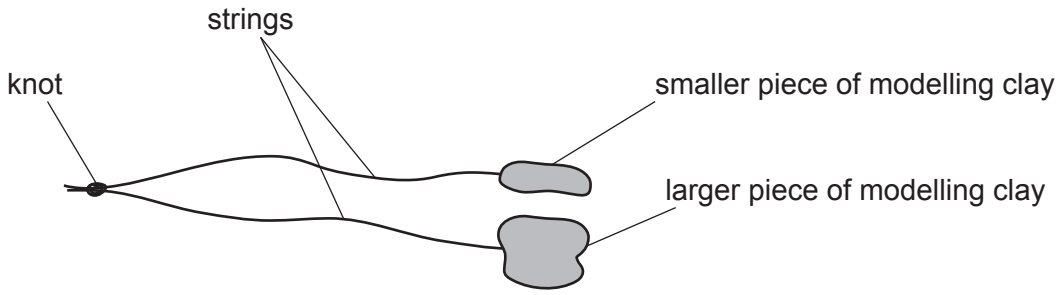

Fig. 2.1

• Set up the apparatus as shown in Fig. 2.2.

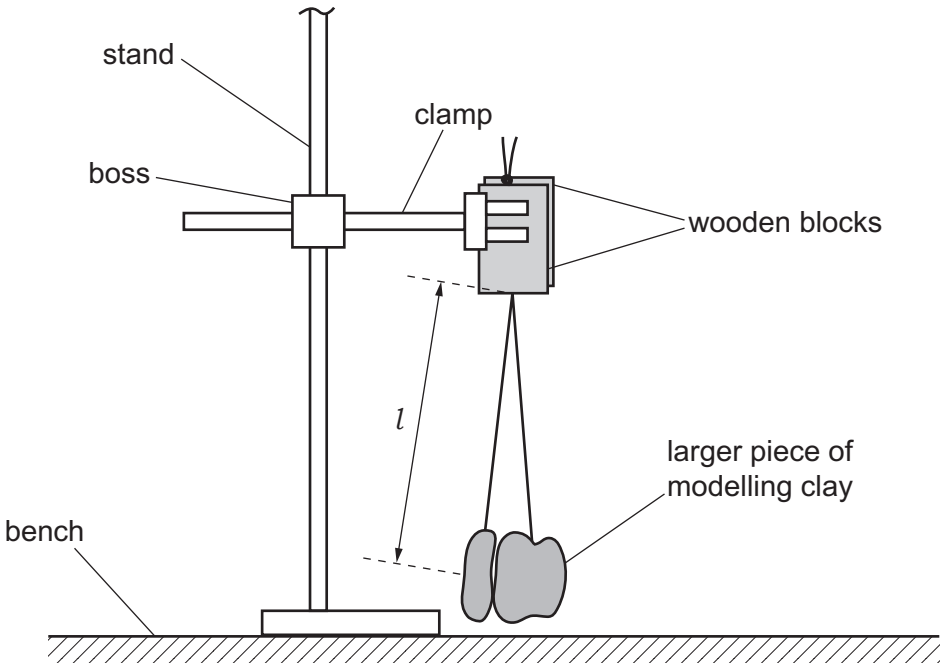

Fig. 2.2

• Adjust the modelling clay until the lengths of the pendulums are the same.

• The distance between the bottom of the wooden blocks and the centre of the smaller piece of modelling clay is l, as shown in Fig. 2.2.

Measure and record l.

l = ... [1]

(ii) • Hold the larger pendulum a short distance away from the smaller pendulum, as shown in Fig. 2.3.

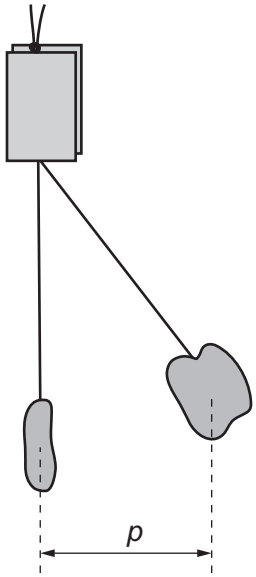

Fig. 2.3

- The horizontal distance between the centres of the pendulums is p.
- Hold the larger pendulum so that p is approximately 12 cm.
- Measure and record p.

p = ... [1]

(iii) Calculate R where

$$R = \sqrt{\left(1 - \frac{p^2}{l^2}\right)}.$$

R = ... [1]

(b) Justify the number of significant figures that you have given for your value of R.

.....

.....

..... [1]

(c) **(i)**

- Hold the larger pendulum so the horizontal distance between the centres of the pendulums is p.
- Release the larger pendulum so that the pendulums collide.
- After colliding, the maximum angle between the vertical and the string of the **smaller** pendulum is θ, as shown in Fig. 2.4.

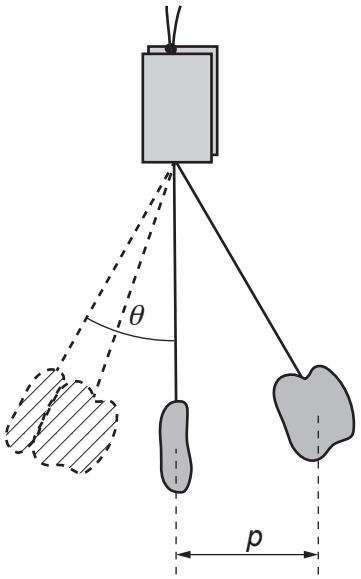

Fig. 2.4

Measure and record θ.

θ = ... ° [2]

(ii) Estimate the percentage uncertainty in your value of θ. Show your working.

percentage uncertainty = ...% [1]

(d) • Remove the modelling clay from the strings.

• Repeat **(a)** and **(c)(i)** using the **longer** strings.

l = ...

p = ...

R = ...

θ = ... °

[3]

(e) It is suggested that the relationship between θ and R is

$$k(1 - \cos\theta) = 1 - R$$

where k is a constant.

Using your data, calculate two values of k.

first value of k = ...

second value of k = ...
[1]

(f) It is suggested that the percentage uncertainty in the values of k is 10%.

Using this uncertainty, explain whether your results support the relationship in **(e)**.

.....

.....

.....

..... [1]

(g) **(i)** Describe **four** sources of uncertainty or limitations of the procedure for this experiment.

For any uncertainties in measurement that you describe, you should state the quantity being measured and a reason for the uncertainty.

1 .....

.....

2 .....

.....

3 .....

.....

4 .....

.....

[4]

(ii) Describe **four** improvements that could be made to this experiment. You may suggest the use of other apparatus or different procedures.

1 .....

.....

2 .....

.....

3 .....

.....

4 .....

.....

[4]

[Total: 20]

Permission to reproduce items where third-party owned material protected by copyright is included has been sought and cleared where possible. Every reasonable effort has been made by the publisher (UCLES) to trace copyright holders, but if any items requiring clearance have unwittingly been included, the publisher will be pleased to make amends at the earliest possible opportunity.

To avoid the issue of disclosure of answer-related information to candidates, all copyright acknowledgements are reproduced online in the Cambridge Assessment International Education Copyright Acknowledgements Booklet. This is produced for each series of examinations and is freely available to download at www.cambridgeinternational.org after the live examination series.

Cambridge Assessment International Education is part of Cambridge Assessment. Cambridge Assessment is the brand name of the University of Cambridge Local Examinations Syndicate (UCLES), which is a department of the University of Cambridge.

© UCLES 2022

Cambridge Assessment International Education

Cambridge International AS & A Level

CANDIDATE NAME	

CENTRE NUMBER						CANDIDATE NUMBER				

PHYSICS **9702/33**

Paper 3 Advanced Practical Skills 1 **October/November 2022**

2 hours

You must answer on the question paper.

You will need: The materials and apparatus listed in the confidential instructions

INSTRUCTIONS

- Answer **all** questions.
- Use a black or dark blue pen. You may use an HB pencil for any diagrams or graphs.
- Write your name, centre number and candidate number in the boxes at the top of the page.
- Write your answer to each question in the space provided.
- Do **not** use an erasable pen or correction fluid.
- Do **not** write on any bar codes.
- You will be allowed to work with the apparatus for a maximum of 1 hour for each question.
- You should record all your observations in the spaces provided in the question paper as soon as these observations are made.
- You may use a calculator.
- You should show all your working and use appropriate units.

INFORMATION

- The total mark for this paper is 40.
- The number of marks for each question or part question is shown in brackets [ ].

For Examiner's Use	
1	
2	
Total	

This document has **16** pages. Any blank pages are indicated.

DC (LK/CT) 302777/5
© UCLES 2022

You may not need to use all of the materials provided.

1 In this experiment, you will determine the resistivity of a metal.

(a) ● Set up the circuit shown in Fig. 1.1.

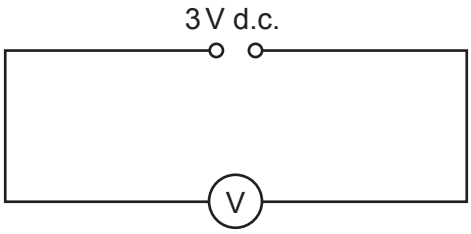

Fig. 1.1

● Record the voltmeter reading *E*.

E = ... V

● Set up the circuit shown in Fig. 1.2.

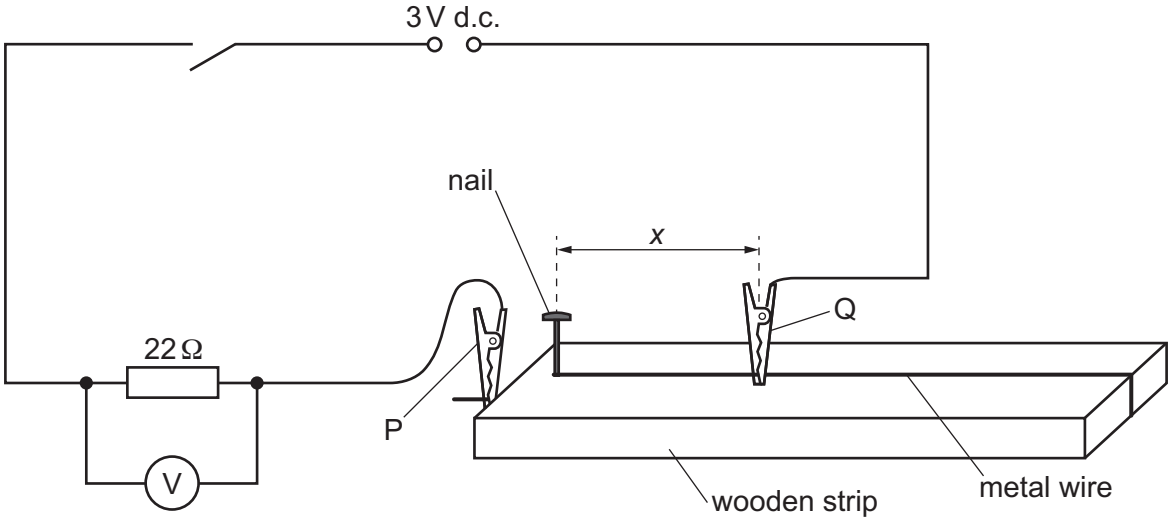

Fig. 1.2 (not to scale)

● P and Q are crocodile clips.

The distance between the nail and Q is *x*, as shown in Fig. 1.2.

Adjust the position of Q until *x* is approximately 45 cm.

- Close the switch.
- The voltmeter reading is V.

  Measure and record x and V.

x = ...

V = ...

- Open the switch.

[1]

(b) Change x by adjusting the position of Q on the wire. Use six different values of x. For each value of x, measure V.

Record your results in a table. Include values of $\frac{1}{V}$ in your table.

[8]

(c) **(i)** Plot a graph of $\frac{1}{V}$ on the y-axis against x on the x-axis. [3]

(ii) Draw the straight line of best fit. [1]

(iii) Determine the gradient and y-intercept of this line.

gradient = ...

y-intercept = ...

[2]

(d) It is suggested that the quantities V and x are related by the equation

$$\frac{1}{V} = Ax + B$$

where A and B are constants.

Using your answers in **(c)(iii)**, determine the values of A and B.
Give appropriate units.

A = ...

B = ...
[1]

(e) **(i)** Use a micrometer to measure the diameter d of the wire.

d = ... [2]

(ii) It is suggested that A is given by the equation

$$A = -\frac{4\rho}{\pi d^2 ER}$$

where R is 22 Ω and ρ is the resistivity of the metal.

Using your answers in **(a)**, **(d)** and **(e)(i)**, determine a value for ρ.
Give an appropriate unit.

ρ = ... [2]

[Total: 20]

BLANK PAGE

You may not need to use all of the materials provided.

2 In this experiment, you will investigate the extension of two springs.

(a) (i) ● Set up the apparatus as shown in Fig. 2.1.

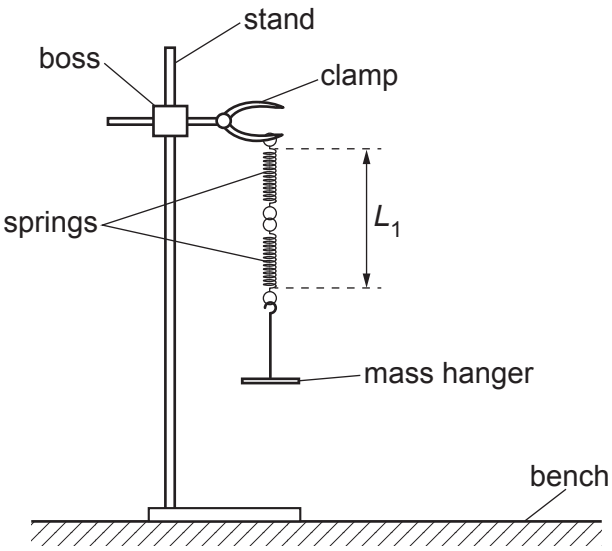

Fig. 2.1

● The length L_1 of the spring combination is measured from the top coil of the top spring to the bottom coil of the bottom spring, as shown in Fig. 2.1.

Measure and record L_1.

L_1 = ... [1]

(ii) Estimate the percentage uncertainty in your value of L_1. Show your working.

percentage uncertainty = ... % [1]

(iii) ● Add the slotted mass to the mass hanger.

● The new length of the spring combination is L_2.

Measure and record L_2.

L_2 = ...

- The spring constant k is given by the equation

$$k = \frac{W}{(L_2 - L_1)}$$

where W is 0.981 N.

Calculate k.

k = ...

- Remove the slotted mass and the mass hanger from the springs.

[1]

(iv) Justify the number of significant figures that you have given for your value of k.

.....

.....

..... [1]

(b) (i)

- Use the balance to measure and record the total mass M of the four **smaller** steel nuts.

M = ...

- The volume V of the four nuts is given by the equation

$$V = \frac{M}{\rho_{\text{steel}}}$$

where the density ρ_{steel} of steel is 7.8 g cm^{-3}.

Calculate V.

V = ...

[2]

(ii) ● Set up the apparatus using the four **smaller** nuts as shown in Fig. 2.2.

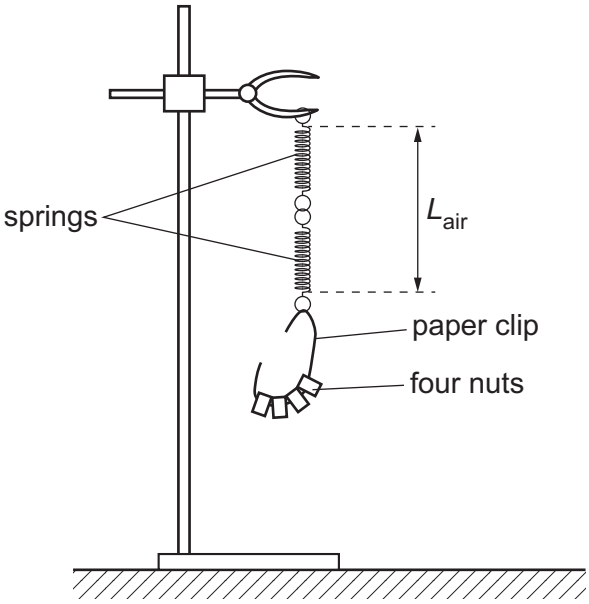

Fig. 2.2

● Bend the paper clip to hold the four nuts.

● The length of the spring combination is L_{air}.

Measure and record L_{air}.

L_{air} = ...

● Gently lower the nuts into the oil until they are submerged but not touching the bottom of the beaker, as shown in Fig. 2.3.

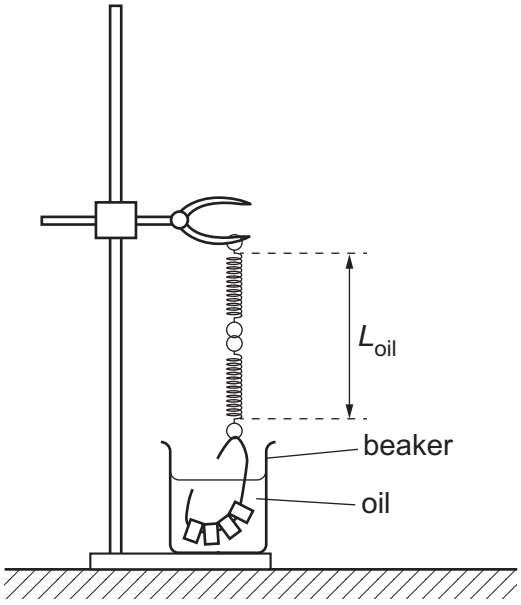

Fig. 2.3

- The length of the spring combination is L_{oil}.

  Measure and record L_{oil}.

  L_{oil} = ...

- Calculate ($L_{air} - L_{oil}$).

  ($L_{air} - L_{oil}$) = ...

- Remove the four nuts from the oil and place them on the tissue in the container.

[1]

(iii) Repeat **(b)(i)** and **(b)(ii)** with the four **larger** steel nuts.

M = ...

V = ...

L_{air} = ...

L_{oil} = ...

($L_{air} - L_{oil}$) = ...

[2]

(c) It is suggested that the relationship between L_{air}, L_{oil} and V is

$$(L_{air} - L_{oil}) = ZV$$

where Z is a constant.

Using your data, calculate two values of Z.

first value of Z = ...

second value of Z = ...
[1]

(d) It is suggested that the percentage uncertainty in the values of Z is 5%.

Using this uncertainty, explain whether your results support the relationship in **(c)**.

.....

.....

.....

..... [1]

(e) The density ρ_{oil} of the oil is related to Z by

$$Z = \frac{\rho_{oil} g}{k}$$

where g is $9.81\,\mathrm{N\,kg^{-1}}$.

Use your second value of Z to determine ρ_{oil}. Give an appropriate unit.

ρ_{oil} = ... [1]

(f) **(i)** Describe **four** sources of uncertainty or limitations of the procedure for this experiment.

For any uncertainties in measurement that you describe, you should state the quantity being measured and a reason for the uncertainty.

1 .....

.....

2 .....

.....

3 .....

.....

4 .....

.....

[4]

(ii) Describe **four** improvements that could be made to this experiment. You may suggest the use of other apparatus or different procedures.

1 .....

.....

2 .....

.....

3 .....

.....

4 .....

.....

[4]

[Total: 20]

BLANK PAGE

BLANK PAGE

Permission to reproduce items where third-party owned material protected by copyright is included has been sought and cleared where possible. Every reasonable effort has been made by the publisher (UCLES) to trace copyright holders, but if any items requiring clearance have unwittingly been included, the publisher will be pleased to make amends at the earliest possible opportunity.

To avoid the issue of disclosure of answer-related information to candidates, all copyright acknowledgements are reproduced online in the Cambridge Assessment International Education Copyright Acknowledgements Booklet. This is produced for each series of examinations and is freely available to download at www.cambridgeinternational.org after the live examination series.

Cambridge Assessment International Education is part of Cambridge Assessment. Cambridge Assessment is the brand name of the University of Cambridge Local Examinations Syndicate (UCLES), which is a department of the University of Cambridge.

© UCLES 2022

Cambridge Assessment International Education

Cambridge International AS & A Level

CANDIDATE NAME	

CENTRE NUMBER						CANDIDATE NUMBER				

2024354059

PHYSICS **9702/34**

Paper 3 Advanced Practical Skills 2 **October/November 2022**

2 hours

You must answer on the question paper.

You will need: The materials and apparatus listed in the confidential instructions

INSTRUCTIONS

- Answer **all** questions.
- Use a black or dark blue pen. You may use an HB pencil for any diagrams or graphs.
- Write your name, centre number and candidate number in the boxes at the top of the page.
- Write your answer to each question in the space provided.
- Do **not** use an erasable pen or correction fluid.
- Do **not** write on any bar codes.
- You will be allowed to work with the apparatus for a maximum of 1 hour for each question.
- You should record all your observations in the spaces provided in the question paper as soon as these observations are made.
- You may use a calculator.
- You should show all your working and use appropriate units.

INFORMATION

- The total mark for this paper is 40.
- The number of marks for each question or part question is shown in brackets [ ].

For Examiner's Use	
1	
2	
Total	

This document has **12** pages.

DC (LK/CGW) 302776/2
© UCLES 2022

You may not need to use all of the materials provided.

1 In this experiment, you will investigate the stability of a cylinder.

(a) **(i)**
- Use some of the sheets of paper to make a pile of approximate thickness 3 mm.
- Using the calipers, measure and record the thickness *T* of the pile.

T = ... [1]

(ii)
- Position the apparatus on the bench as shown in Fig. 1.1.

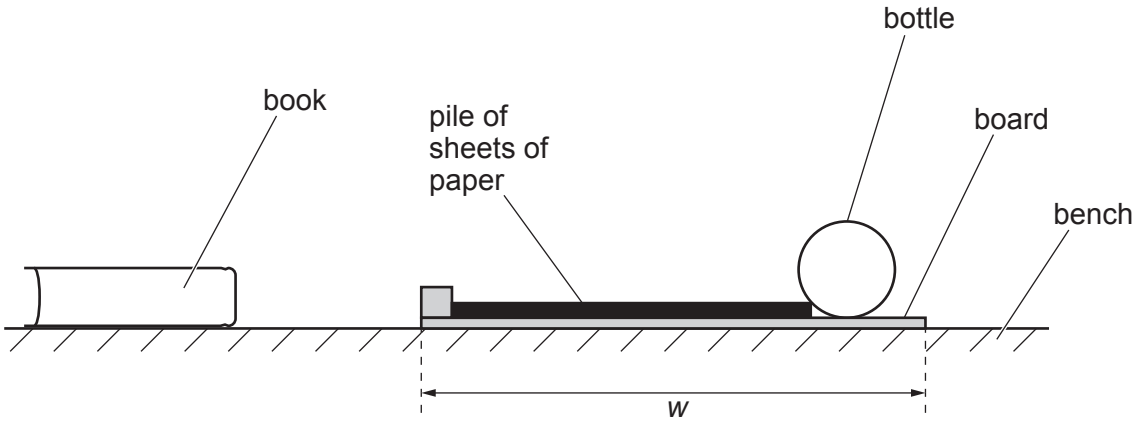

Fig. 1.1

- Measure and record the width *w* of the board, as shown in Fig. 1.1.

w = ... [1]

(b) ● Use the stand and clamp to hold the rule vertically on the bench.

● Slowly raise the end of the board, as shown in Fig. 1.2.

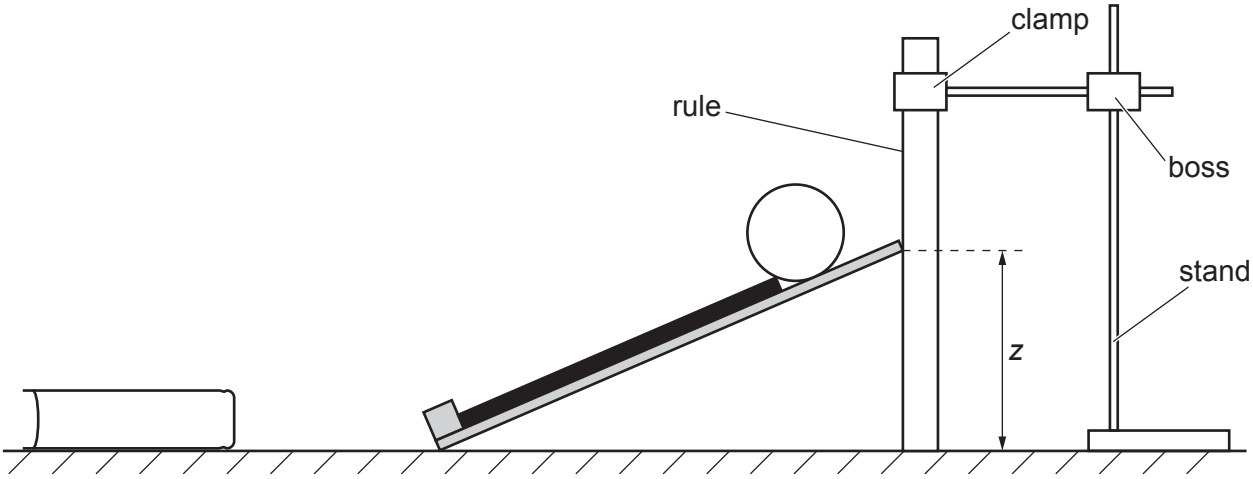

Fig. 1.2

● Measure and record the height z of the raised end of the board when the bottle rolls over the pile of paper.

z = ...

● Calculate θ using

$$\theta = \sin^{-1}\left(\frac{z}{w}\right).$$

θ = ...
[1]

(c) Change the number of sheets of paper in the pile. Measure T and z. Repeat until you have six sets of values of T and z.

Record your results in a table. Include values of θ and $\cos\theta$ in your table.
Give your values of $\cos\theta$ to three significant figures.

[9]

(d) **(i)** Plot a graph of $\cos\theta$ on the y-axis against T on the x-axis. [3]

(ii) Draw the straight line of best fit. [1]

(iii) Determine the gradient and y-intercept of this line.

gradient = ...

y-intercept = ...
[2]

(e) It is suggested that the quantities θ and T are related by the equation

$$\cos\theta = a - bT$$

where a and b are constants.

Using your answers in **(d)(iii)**, determine the values of a and b.
Give appropriate units.

a = ...

b = ...
[2]

[Total: 20]

You may not need to use all of the materials provided.

2 In this experiment, you will investigate the force acting on a magnet.

(a) **(i)** You have been provided with some of the apparatus already assembled, as shown in Fig. 2.1.

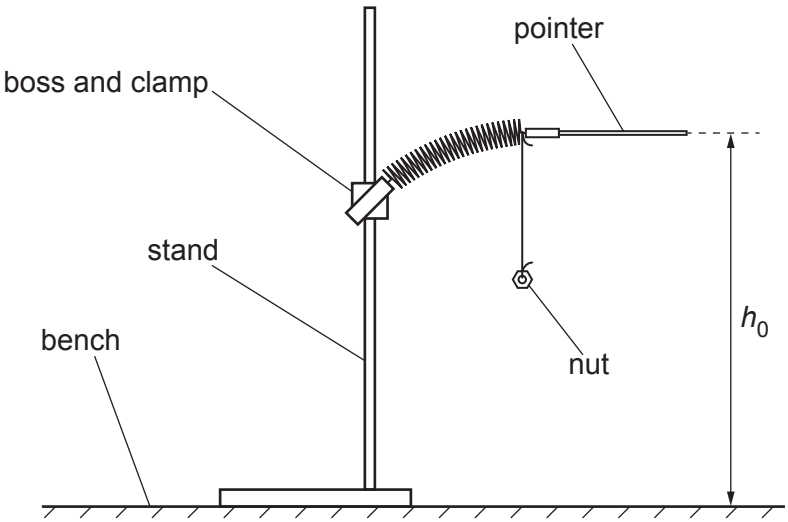

Fig. 2.1

Measure and record the height h_0 of the end of the pointer above the bench.

h_0 = ... [1]

(ii) ● Attach the small magnet to the nut, as shown in Fig. 2.2.

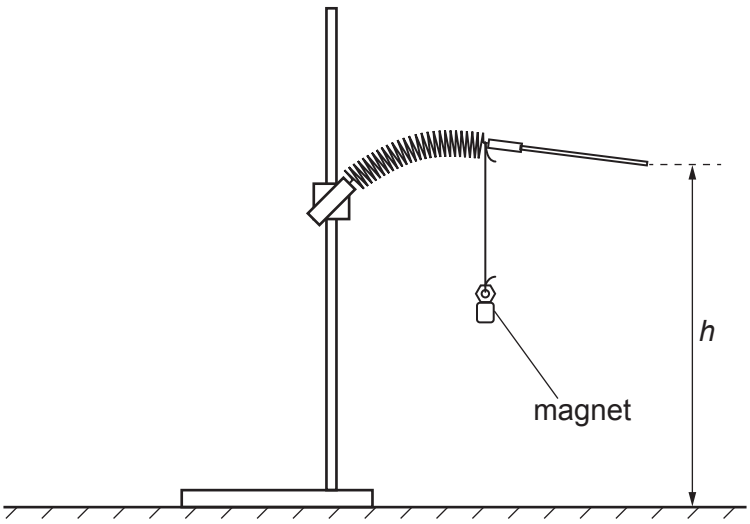

Fig. 2.2

● Measure and record the height h of the end of the pointer above the bench.

h = ... [1]

(iii) ● Calculate the deflection d_m caused by the magnet, using

$$d_m = h_0 - h.$$

d_m = ...

● Estimate the percentage uncertainty in your value of d_m. Show your working.

percentage uncertainty = ... %
[1]

(b) **(i)** You have been provided with a card showing the mass m of the magnet in g.

● Determine the value of m in kg.

m = ... kg

● Calculate S using

$$S = \frac{mg}{d_m}$$

where g is 9.81 N kg^{-1}.

S = ...
[1]

(ii) Justify the number of significant figures that you have given for your value of S.

.....

.....

..... [1]

(c) **(i)** You have been provided with a wire coil wound around a tube and connected to a component holder.

- Use the second boss and clamp to position the tube so that the magnet hangs **inside** the tube, as shown in Fig. 2.3.

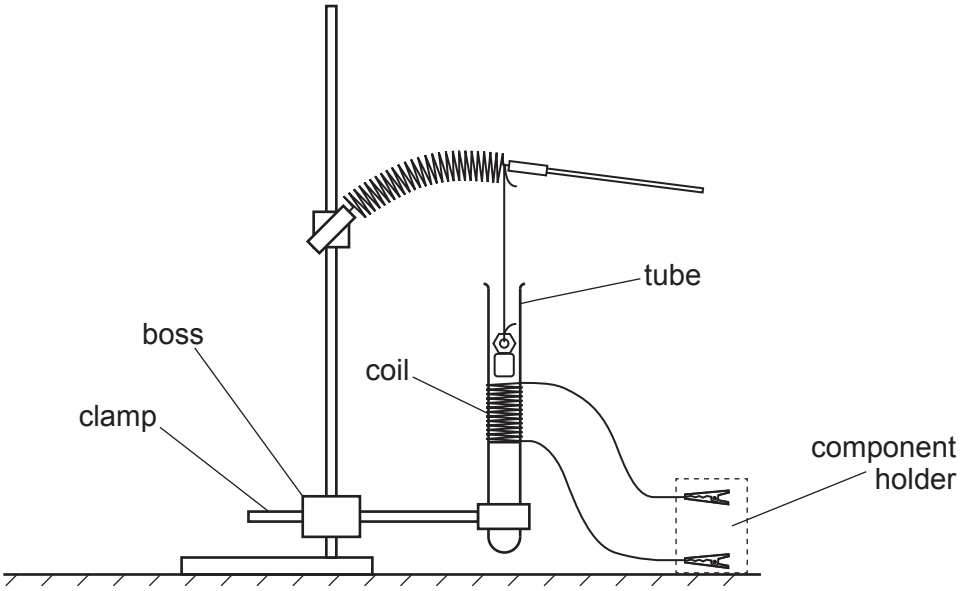

Fig. 2.3

- Adjust the position of the tube so that the magnet is just above the coil and is not touching the walls of the tube.

- Attach the circuit shown in Fig. 2.4.

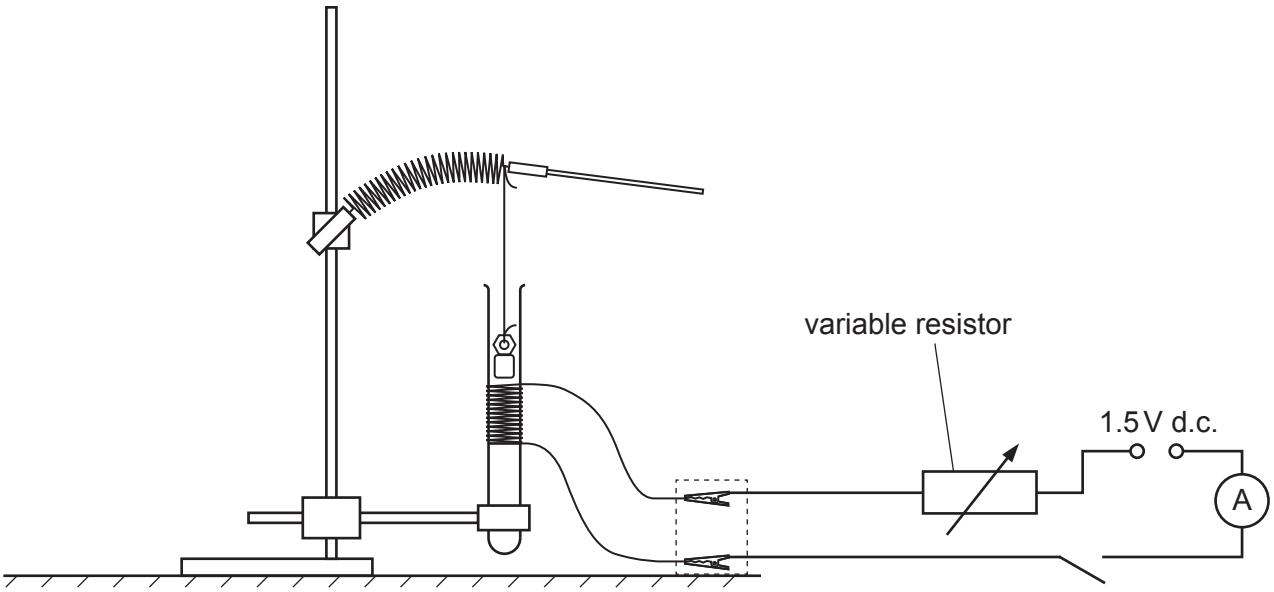

Fig. 2.4

- Close the switch and adjust the variable resistor until the ammeter reads approximately 0.3 A, then open the switch.

- The magnet should have been pulled down when the current was flowing.
  If the magnet was not pulled down when the current was flowing, reverse the connections to the power supply.

- Close the switch.

- Measure and record the height H of the end of the pointer above the bench.

H = ...

- Record the ammeter reading I.

I = ...

- Open the switch.

[2]

(ii) ● Close the switch and adjust the variable resistor until the ammeter reads approximately 0.7 A.

● Measure and record the height H of the end of the pointer above the bench.

H = ...

● Record the ammeter reading I.

I = ...

● Open the switch.

[3]

(d) It is suggested that the relationship between S, h, H and I is

$$S(h - H) = kI$$

where k is a constant.

Using your data, calculate two values of k.

first value of k = ...

second value of k = ...

[1]

(e) It is suggested that the percentage uncertainty in the values of k is 20%.

Using this uncertainty, explain whether your results support the relationship in **(d)**.

.....

.....

.....

..... [1]

(f) **(i)** Describe **four** sources of uncertainty or limitations of the procedure for this experiment.

For any uncertainties in measurement that you describe, you should state the quantity being measured and a reason for the uncertainty.

1 .....

.....

2 .....

.....

3 .....

.....

4 .....

.....

[4]

(ii) Describe **four** improvements that could be made to this experiment. You may suggest the use of other apparatus or different procedures.

1 .....

.....

2 .....

.....

3 .....

.....

4 .....

.....

[4]

[Total: 20]

Permission to reproduce items where third-party owned material protected by copyright is included has been sought and cleared where possible. Every reasonable effort has been made by the publisher (UCLES) to trace copyright holders, but if any items requiring clearance have unwittingly been included, the publisher will be pleased to make amends at the earliest possible opportunity.

To avoid the issue of disclosure of answer-related information to candidates, all copyright acknowledgements are reproduced online in the Cambridge Assessment International Education Copyright Acknowledgements Booklet. This is produced for each series of examinations and is freely available to download at www.cambridgeinternational.org after the live examination series.

Cambridge Assessment International Education is part of Cambridge Assessment. Cambridge Assessment is the brand name of the University of Cambridge Local Examinations Syndicate (UCLES), which is a department of the University of Cambridge.

© UCLES 2022

Cambridge Assessment International Education

Cambridge International AS & A Level

CANDIDATE NAME	

CENTRE NUMBER						CANDIDATE NUMBER				

2617776585

PHYSICS **9702/35**

Paper 3 Advanced Practical Skills 1 **October/November 2022**

2 hours

You must answer on the question paper.

You will need: The materials and apparatus listed in the confidential instructions

INSTRUCTIONS

- Answer **all** questions.
- Use a black or dark blue pen. You may use an HB pencil for any diagrams or graphs.
- Write your name, centre number and candidate number in the boxes at the top of the page.
- Write your answer to each question in the space provided.
- Do **not** use an erasable pen or correction fluid.
- Do **not** write on any bar codes.
- You will be allowed to work with the apparatus for a maximum of 1 hour for each question.
- You should record all your observations in the spaces provided in the question paper as soon as these observations are made.
- You may use a calculator.
- You should show all your working and use appropriate units.

INFORMATION

- The total mark for this paper is 40.
- The number of marks for each question or part question is shown in brackets [ ].

For Examiner's Use	
1	
2	
Total	

This document has **16** pages. Any blank pages are indicated.

DC (PQ/SG) 302778/2
© UCLES 2022

You may not need to use all of the materials provided.

1 In this experiment, you will investigate the balancing of a metre rule.

(a) ● Set up the apparatus as shown in Fig. 1.1.

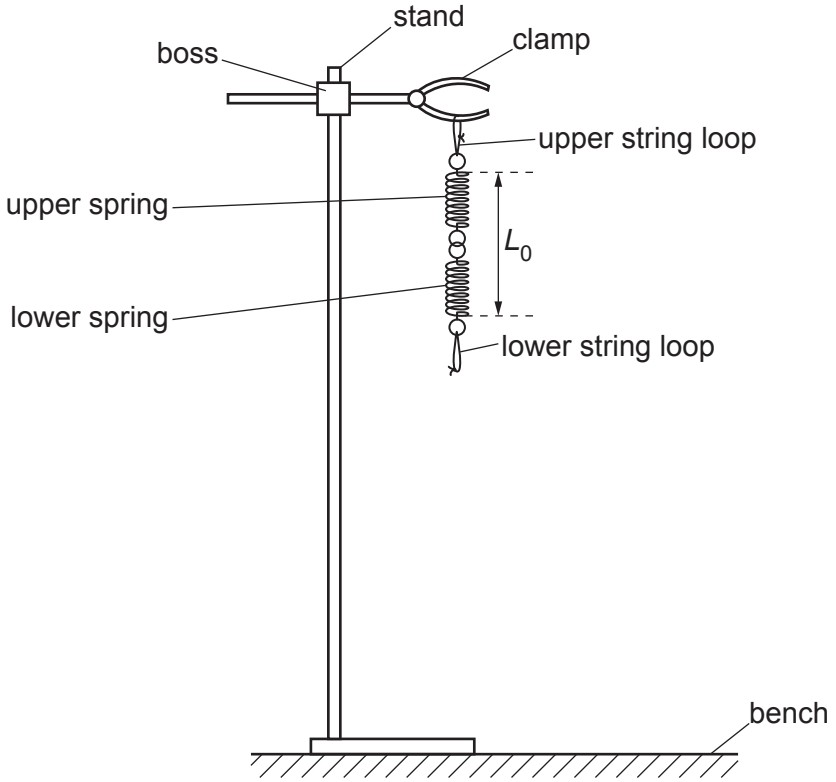

Fig. 1.1

● The length L_0 of the spring combination is measured between the top coil of the upper spring and the bottom coil of the lower spring, as shown in Fig. 1.1.

Measure and record L_0.

L_0 = ... cm

- Use the lower string loop to suspend a total mass of 200 g, as shown in Fig. 1.2.

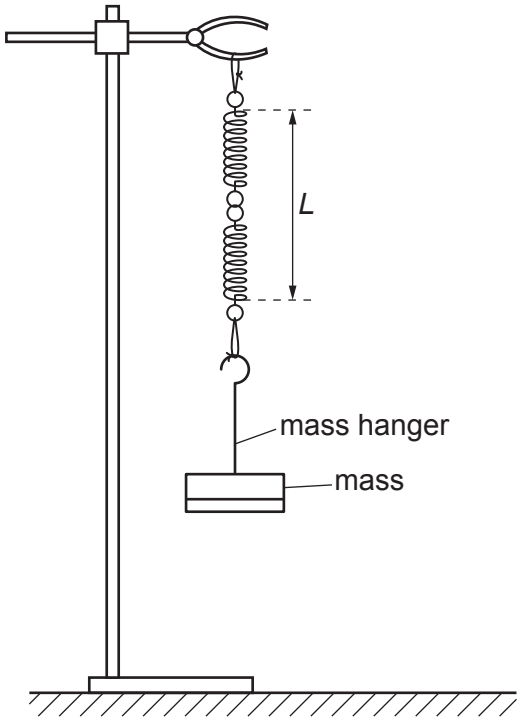

Fig. 1.2

- The new length of the spring combination is *L*.

  Measure and record *L*.

L = ... cm

- The spring constant *k* of the spring combination is given by the equation

$$k = \frac{W}{(L - L_0)}$$

  where *W* is 1.96 N.

  Calculate *k*.

k = ...
[2]

BLANK PAGE

(b) ● Set up the apparatus as shown in Fig. 1.3.

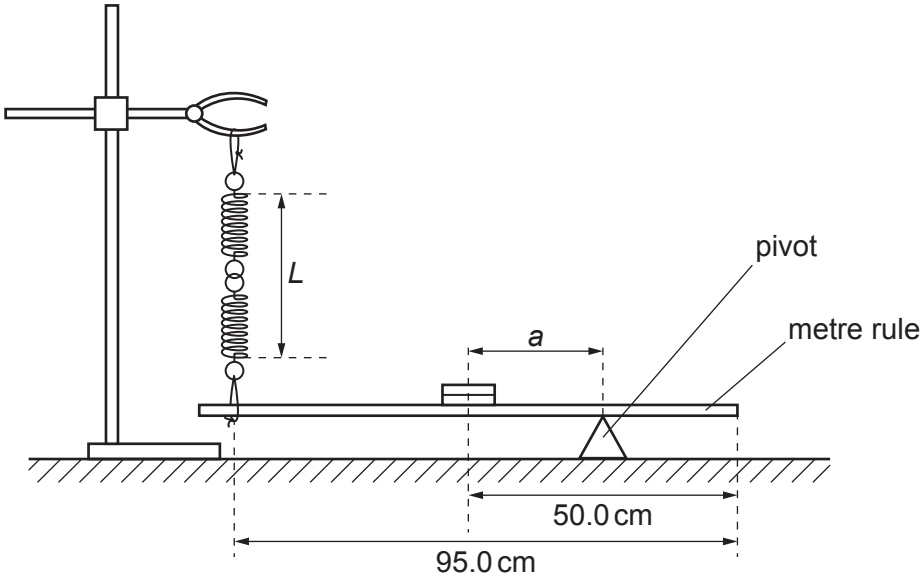

Fig. 1.3

- Use the adhesive putty to fix two 100 g slotted masses with their centres above the 50.0 cm mark on the rule. The masses must remain at this position throughout the experiment.
- Place the lower string loop at the 5.0 cm mark on the rule.
- The distance between the pivot and the midpoint of the rule is *a*.

  Adjust the pivot so that *a* is approximately 25 cm.
- Adjust the stand, boss and clamp so that the springs are vertical and the rule is horizontal.
- Measure and record *a* and *L*.

a = ...

L = ...

- The extension of the spring combination is given by the equation

$$e = L - L_0.$$

  Calculate *e*.

e = ...

- Change a by moving the pivot. Adjust the stand, boss and clamp so that the springs are vertical and the rule is horizontal. Measure a and L. Repeat until you have six sets of values of a and L.
  Do not include values of a less than 15.0 cm.

  Record your results in a table. Include values of e, $\frac{1}{a}$ and $\frac{1}{e}$ in your table.

[9]

(c) **(i)** Plot a graph of $\frac{1}{e}$ on the y-axis against $\frac{1}{a}$ on the x-axis. [3]

(ii) Draw the straight line of best fit. [1]

(iii) Determine the gradient and y-intercept of this line.

gradient = ...

y-intercept = ...

[2]

(d) **(i)** It is suggested that the quantities e and a are related by the equation

$$\frac{1}{e} = B\frac{1}{a} + C$$

where B and C are constants.

Using your answers in **(c)(iii)**, determine the values of B and C.
Give appropriate units.

B = ...

C = ...
[2]

(ii) Theory suggests that

$$C = \frac{k}{(R + W)}$$

where R is the weight of the rule and W is 1.96 N.

Using your answers in **(a)** and **(d)(i)**, determine a value for R.

R = ... N [1]

[Total: 20]

You may not need to use all of the materials provided.

2 In this experiment, you will investigate the oscillations of a triangular card.

(a) ● Determine the midpoint M of the shortest side of the triangle.

● Draw a line from M to the opposite corner of the triangle, as shown in Fig. 2.1.

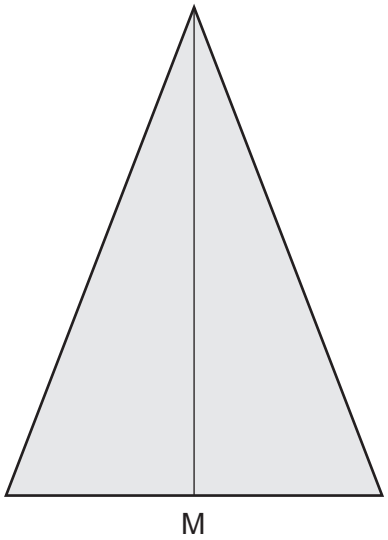

Fig. 2.1 (not to scale)

● Determine the midpoint N of one of the longer sides.

● Draw a line from N to the opposite corner of the triangle, as shown in Fig. 2.2.

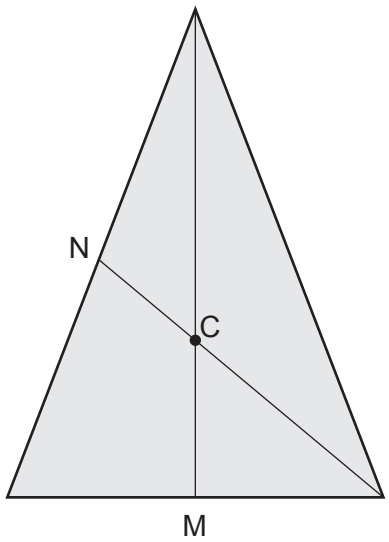

Fig. 2.2 (not to scale)

● Mark the point C where the two lines cross.

● The distance between C and M is *d*.

Measure and record *d.*

d = ... m [1]

(b) (i) ● On the line from M to the opposite corner, mark a point P a distance of approximately 0.06 m from C, as shown in Fig. 2.3.

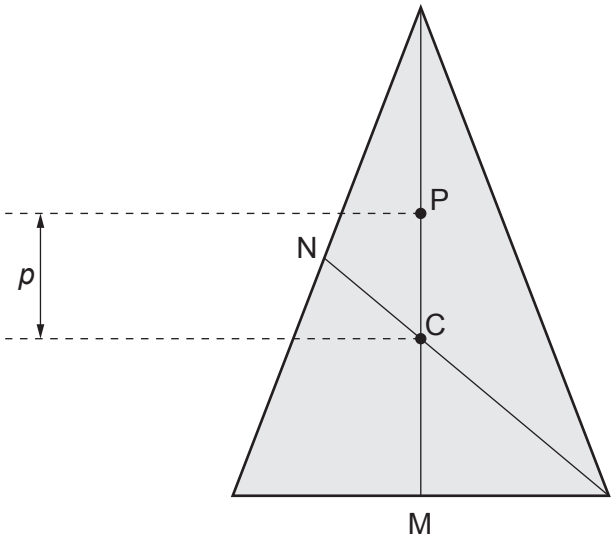

Fig. 2.3 (not to scale)

● The distance between C and P is *p*, as shown in Fig. 2.3.

Measure and record *p* in metres.

p = ... m

● Place the card on the cork so that P is above the cork. Use the pin to carefully pierce a small hole in the card at P.

● Set up the apparatus as shown in Fig. 2.4.

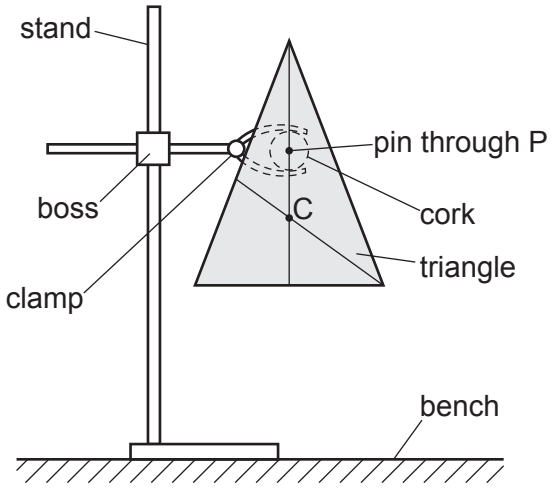

Fig. 2.4

- Displace the base of the triangle through a small distance to the side. Release it so that it oscillates as shown in Fig. 2.5.

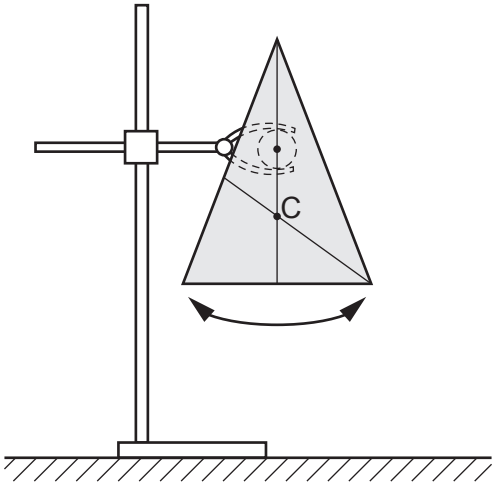

Fig. 2.5

- Take measurements to determine the period T of the oscillations.

T = ... s
[3]

(ii) Estimate the percentage uncertainty in your value of T. Show your working.

percentage uncertainty = ... % [1]

(iii) Calculate p^2 and T^2p.

p^2 = ...

T^2p = ...
[1]

(iv) Justify the number of significant figures that you have given for your value of T^2p.

.....

.....

..... [1]

(v) Repeat **(b)(i)** and **(b)(iii)** with a distance p of approximately 0.12 m.

p = ... m

T = ... s

p^2 = ...

T^2p = ...
[2]

(c) It is suggested that the relationship between T and p is

$$T^2p = qp^2 + S$$

where S has the value 0.015 m s^2 and q is a constant.

Using your data, calculate two values of q.

first value of q = ...

second value of q = ...
[1]

(d) It is suggested that the percentage uncertainty in the values of q is 15%.

Using this uncertainty, explain whether your results support the relationship in **(c)**.

.....

.....

.....

..... [1]

(e) Theory suggests that

$$q = \frac{4\pi^2}{g}$$

where g is the acceleration of free fall.

Use your second value of q to determine g.
Give an appropriate unit.

g = ... [1]

(f) **(i)** Describe **four** sources of uncertainty or limitations of the procedure for this experiment.

For any uncertainties in measurement that you describe, you should state the quantity being measured and a reason for the uncertainty.

1 .....

.....

2 .....

.....

3 .....

.....

4 .....

.....

[4]

(ii) Describe **four** improvements that could be made to this experiment. You may suggest the use of other apparatus or different procedures.

1 .....

.....

2 .....

.....

3 .....

.....

4 .....

.....

[4]

[Total: 20]

BLANK PAGE

BLANK PAGE

Permission to reproduce items where third-party owned material protected by copyright is included has been sought and cleared where possible. Every reasonable effort has been made by the publisher (UCLES) to trace copyright holders, but if any items requiring clearance have unwittingly been included, the publisher will be pleased to make amends at the earliest possible opportunity.

To avoid the issue of disclosure of answer-related information to candidates, all copyright acknowledgements are reproduced online in the Cambridge Assessment International Education Copyright Acknowledgements Booklet. This is produced for each series of examinations and is freely available to download at www.cambridgeinternational.org after the live examination series.

Cambridge Assessment International Education is part of Cambridge Assessment. Cambridge Assessment is the brand name of the University of Cambridge Local Examinations Syndicate (UCLES), which is a department of the University of Cambridge.

© UCLES 2022

Cambridge Assessment International Education

Cambridge International AS & A Level

CANDIDATE NAME	

CENTRE NUMBER						CANDIDATE NUMBER				

PHYSICS **9702/36**

Paper 3 Advanced Practical Skills 2 **October/November 2022**

2 hours

You must answer on the question paper.

You will need: The materials and apparatus listed in the confidential instructions

INSTRUCTIONS

- Answer **all** questions.
- Use a black or dark blue pen. You may use an HB pencil for any diagrams or graphs.
- Write your name, centre number and candidate number in the boxes at the top of the page.
- Write your answer to each question in the space provided.
- Do **not** use an erasable pen or correction fluid.
- Do **not** write on any bar codes.
- You will be allowed to work with the apparatus for a maximum of 1 hour for each question.
- You should record all your observations in the spaces provided in the question paper as soon as these observations are made.
- You may use a calculator.
- You should show all your working and use appropriate units.

INFORMATION

- The total mark for this paper is 40.
- The number of marks for each question or part question is shown in brackets [ ].

For Examiner's Use	
1	
2	
Total	

This document has **16** pages. Any blank pages are indicated.

DC (RW/CB) 302769/2
© UCLES 2022

You may not need to use all of the materials provided.

1 In this experiment, you will investigate the oscillations of a pendulum.

(a) (i) ● Assemble the apparatus as shown in Fig. 1.1 with the top nail held securely in the cork by the clamp. Check that the rod can swing freely.

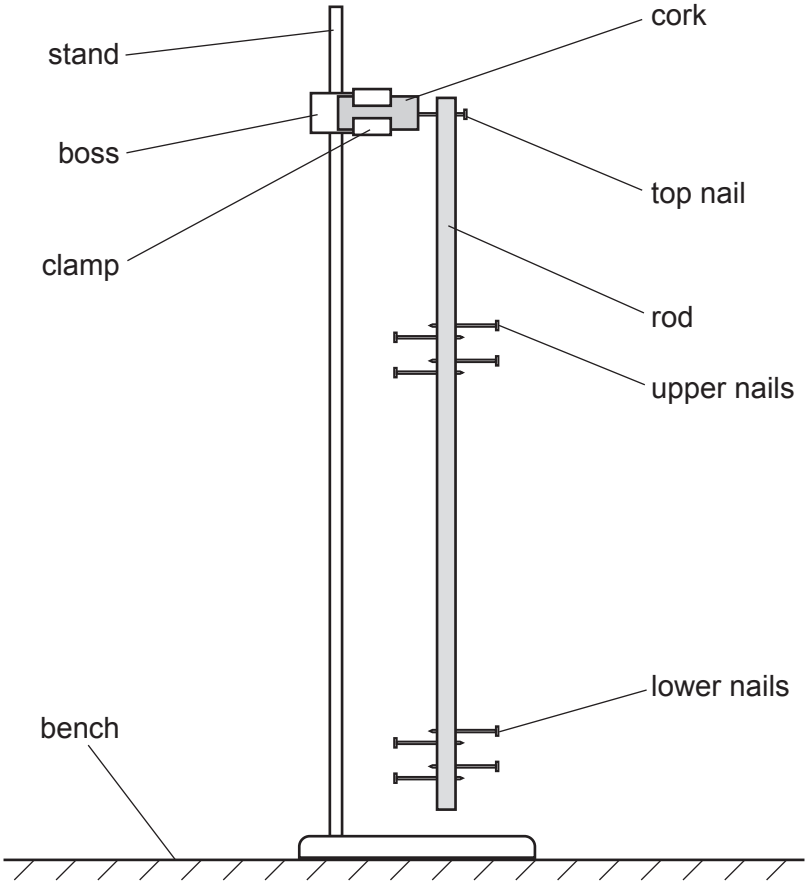

Fig. 1.1

● Slot masses onto the upper and lower nails as shown in Fig. 1.2.

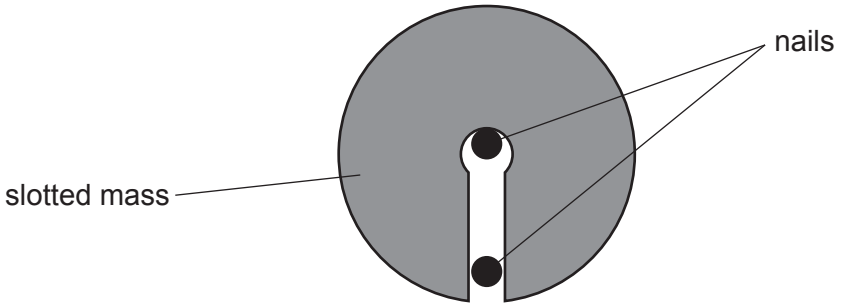

Fig. 1.2

- Load **all** of the masses onto the nails in the positions shown in Fig. 1.3.

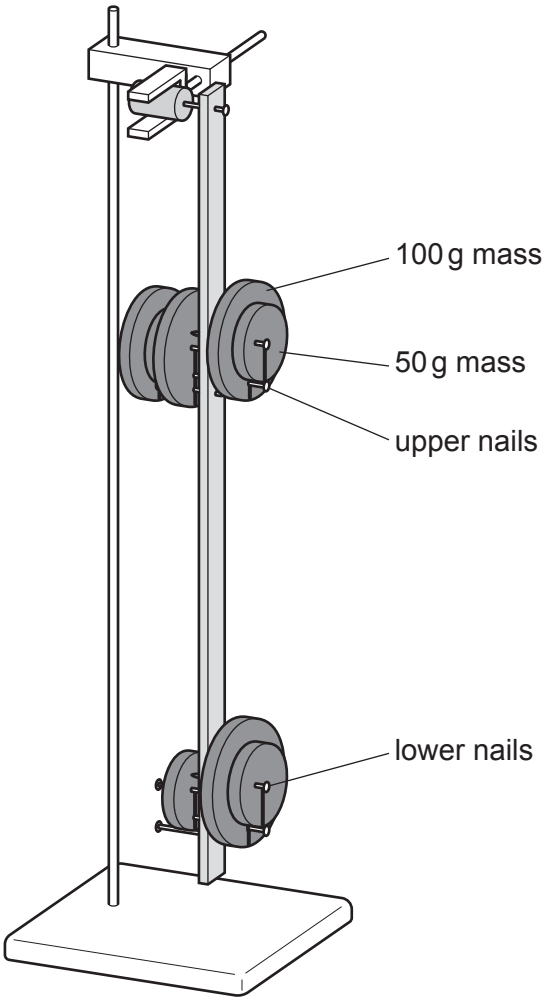

Fig. 1.3

- Record the total mass M_L on the four **lower** nails.

M_L = ... [1]

(ii) - Push the bottom of the rod through a short distance and release it so that it oscillates.

- Take measurements to determine the period T of these oscillations.

T = ... [2]

(b) Rearrange the slotted masses between the upper and lower nails.
Record M_L and determine T. Repeat until you have six sets of values.

Use **all** of the slotted masses each time so that the mass of the pendulum is constant.

Record your results in a table. Include values of $\sqrt{M_L}$ to three significant figures in your table.

[9]

(c) **(i)** Plot a graph of T on the y-axis against $\sqrt{M_L}$ on the x-axis. [3]

(ii) Draw the straight line of best fit. [1]

(iii) Determine the gradient and y-intercept of this line.

gradient = ...

y-intercept = ...
[2]

(d) It is suggested that the quantities T and M_L are related by the equation

$$T = a\sqrt{M_L} + b$$

where a and b are constants.

Using your answers in **(c)(iii)**, determine the values of a and b.
Give appropriate units.

a = ...

b = ...
[2]

[Total: 20]

You may not need to use all of the materials provided.

2 In this experiment, you will investigate the optical properties of a transparent block.

(a) You are provided with a semicircular transparent block.

Take measurements to determine the radius of curvature *R* of the curved surface, as shown in Fig. 2.1.

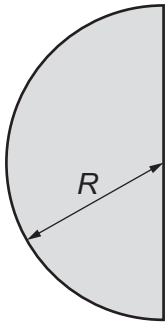

Fig. 2.1

R = ... [1]

(b) **(i)** You are provided with a piece of paper labelled P with four parallel lines drawn on it.

- *A* is the distance between the two central lines and *B* is the distance between the two outer lines.

  Measure and record *A* and *B*.

A = ...

B = ...

- Calculate *E* using

$$E = \frac{B}{A}.$$

E = ...
[1]

(ii) ● Arrange the apparatus as shown in Fig. 2.2.

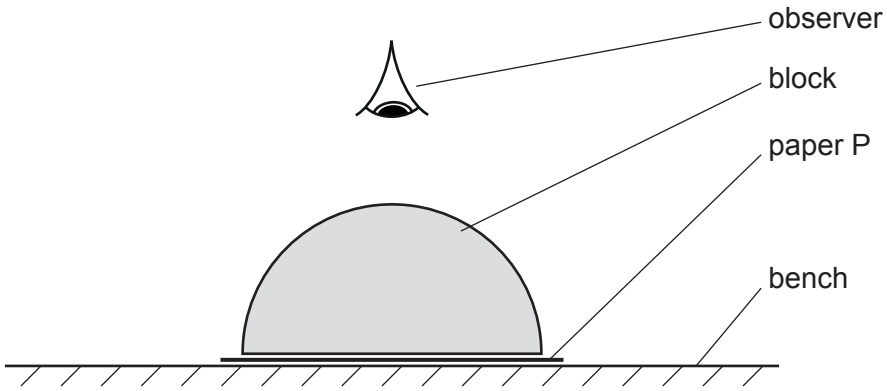

Fig. 2.2

● Look down through the block and close one eye. The appearance of the lines should be similar to Fig. 2.3.

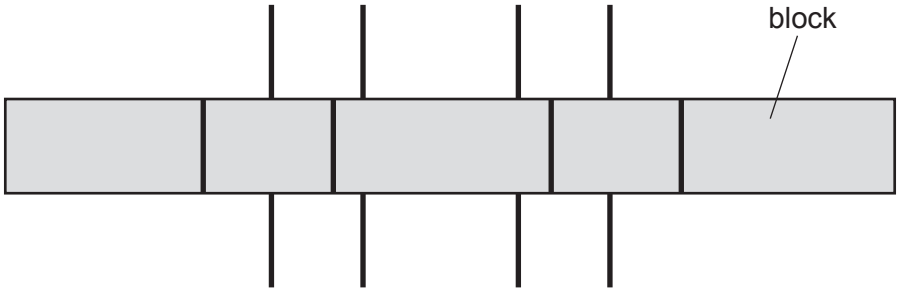

Fig. 2.3

● Gradually raise the block until the two central lines seen through the block are aligned with the two outer lines seen outside the block, as shown in Fig. 2.4.
You may have to move your head sideways to see this alignment.

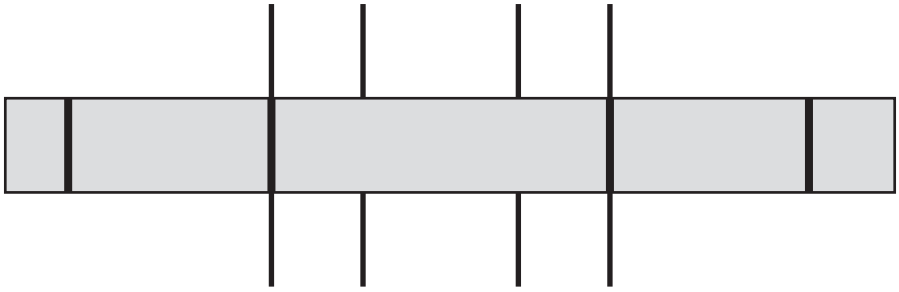

Fig. 2.4

- With the block in this position, measure and record the height d_1 of the block above the paper, as shown in Fig. 2.5.

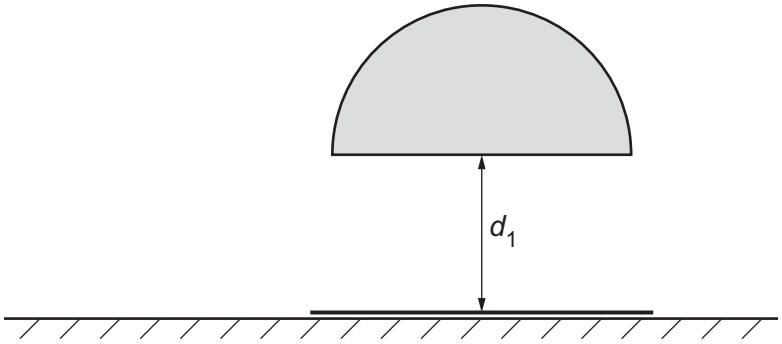

Fig. 2.5

d_1 = ... cm [2]

(iii) Estimate the percentage uncertainty in your value of d_1.
Show your working.

percentage uncertainty = ...% [1]

BLANK PAGE

(iv)
- Turn the block over and lower the curved face onto the paper.
- Look down through the block and close one eye.
- Gradually raise the block until the two central lines seen through the block are aligned with the two outer lines seen outside the block.
- Measure and record the height d_2 of the block above the paper, as shown in Fig. 2.6.

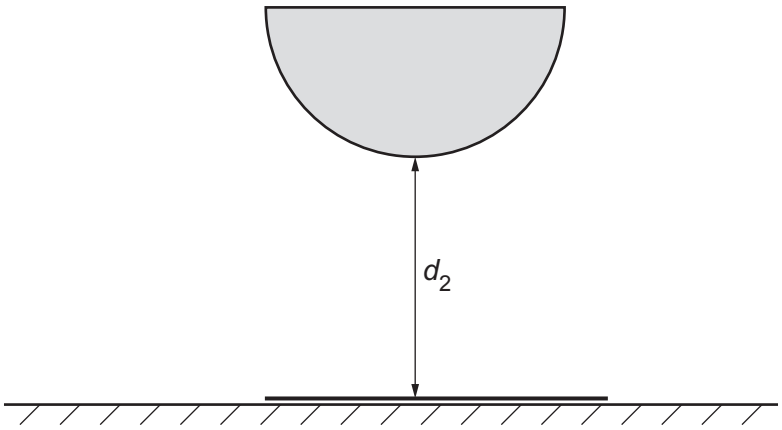

Fig. 2.6

d_2 = ... cm [1]

(c) Repeat **(b)(i)**, **(b)(ii)** and **(b)(iv)** but this time using the piece of paper labelled Q.

A = ...

B = ...

E = ...

d_1 = ... cm

d_2 = ... cm
[3]

(d) It is suggested that the relationship between R, d_1 and d_2 is

$$2k = R + d_1 - d_2$$

where k is a constant.

Using your data, calculate two values of k.

first value of k = ...

second value of k = ...
[1]

(e) It is suggested that the percentage uncertainty in the values of k is 5%.

Using this uncertainty, explain whether your results support the relationship in **(d)**.

.....

.....

.....

..... [1]

(f) A property of the block called the focal length f is given by

$$f = \frac{E(d_2 + k)}{(E - 1)}.$$

Using your results from **(c)** and your second value of k, calculate the value of f.

f = ... [1]

(g) **(i)** Describe **four** sources of uncertainty or limitations of the procedure for this experiment.

For any uncertainties in measurement that you describe, you should state the quantity being measured and a reason for the uncertainty.

1 .....

.....

2 .....

.....

3 .....

.....

4 .....

.....

[4]

(ii) Describe **four** improvements that could be made to this experiment. You may suggest the use of other apparatus or different procedures.

1 .....

.....

2 .....

.....

3 .....

.....

4 .....

.....

[4]

[Total: 20]

© UCLES 2022

BLANK PAGE

BLANK PAGE

Permission to reproduce items where third-party owned material protected by copyright is included has been sought and cleared where possible. Every reasonable effort has been made by the publisher (UCLES) to trace copyright holders, but if any items requiring clearance have unwittingly been included, the publisher will be pleased to make amends at the earliest possible opportunity.

To avoid the issue of disclosure of answer-related information to candidates, all copyright acknowledgements are reproduced online in the Cambridge Assessment International Education Copyright Acknowledgements Booklet. This is produced for each series of examinations and is freely available to download at www.cambridgeinternational.org after the live examination series.

Cambridge Assessment International Education is part of Cambridge Assessment. Cambridge Assessment is the brand name of the University of Cambridge Local Examinations Syndicate (UCLES), which is a department of the University of Cambridge.

© UCLES 2022