Cambridge Assessment International Education

Cambridge International AS & A Level

CANDIDATE NAME	

CENTRE NUMBER						CANDIDATE NUMBER				

6945850561

PHYSICS **9702/31**

Paper 3 Advanced Practical Skills 1 **October/November 2021**

2 hours

You must answer on the question paper.

You will need: The materials and apparatus listed in the confidential instructions

INSTRUCTIONS

- Answer **all** questions.
- Use a black or dark blue pen. You may use an HB pencil for any diagrams or graphs.
- Write your name, centre number and candidate number in the boxes at the top of the page.
- Write your answer to each question in the space provided.
- Do **not** use an erasable pen or correction fluid.
- Do **not** write on any bar codes.
- You will be allowed to work with the apparatus for a maximum of 1 hour for each question.
- You should record all your observations in the spaces provided in the question paper as soon as these observations are made.
- You may use a calculator.
- You should show all your working and use appropriate units.

INFORMATION

- The total mark for this paper is 40.
- The number of marks for each question or part question is shown in brackets [ ].

For Examiner's Use	
1	
2	
Total	

This document has **16** pages. Any blank pages are indicated.

DC (MB/CT) 204862/3
© UCLES 2021

You may not need to use all of the materials provided.

1 In this experiment, you will investigate oscillations.

(a) ● Slide the loop of a spring onto a wooden rod. Fix the loop of the spring in the middle of the wooden rod with a clip, as shown in Fig. 1.1.

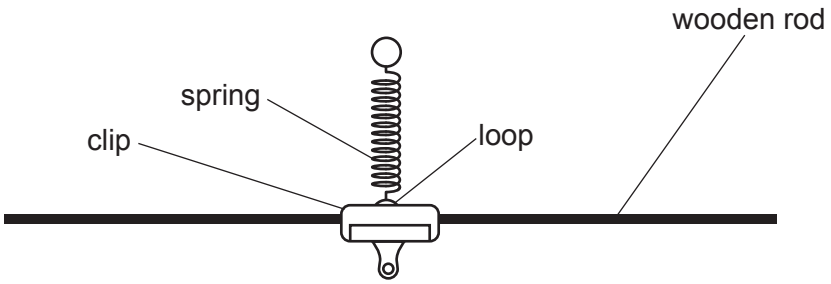

Fig. 1.1

● Use half of the adhesive putty to fix four 10 g masses to the wooden rod as shown in Fig. 1.2.

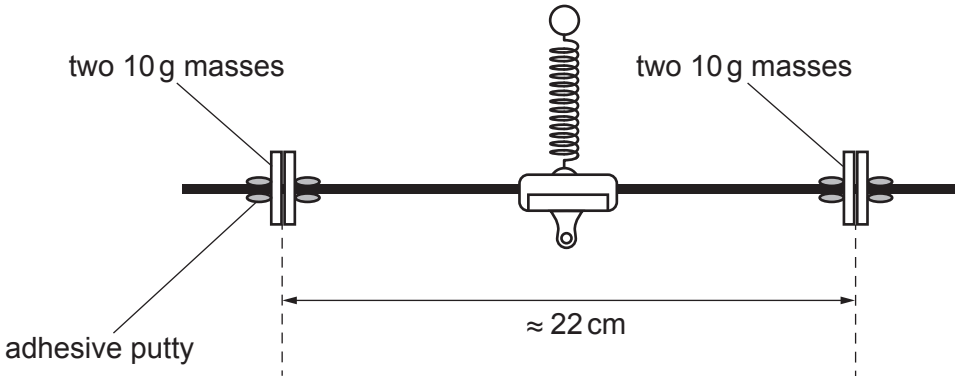

Fig. 1.2

● Adjust the positions of the masses until the distance between the masses is approximately 22 cm. The masses should each be approximately the same distance from the clip, as shown in Fig. 1.2.

- Clamp the loop at the top of the spring between two small wooden blocks.
- Arrange the apparatus as shown in Fig. 1.3.

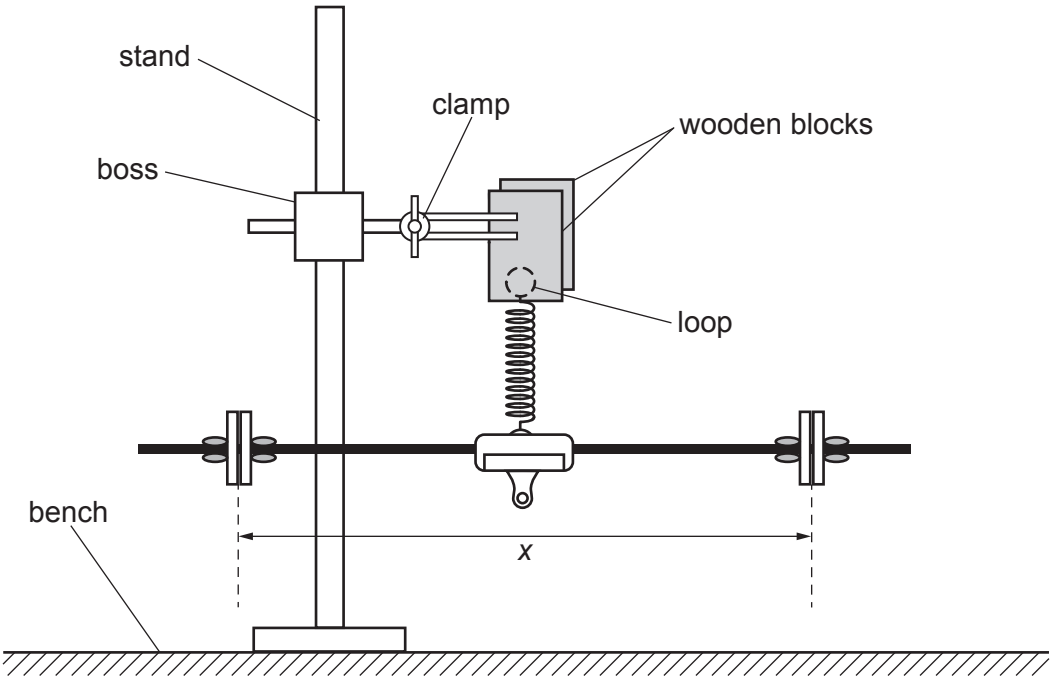

Fig. 1.3

- Adjust the position of the clip until the rod balances approximately parallel to the bench.
- The distance between the masses on the wooden rod is x, as shown in Fig. 1.3.

  Measure and record x.

x = ... [1]

(b)
- Using the other wooden rod, set up a second set of apparatus as shown in Fig. 1.3.
- The distance between the masses on this wooden rod is p.

  Adjust the position of the masses until the value of p is approximately 18 cm.
- Measure and record p.

p = ... [1]

(c) ● Move the apparatus until the two rods are close to each other and in line as shown in Fig. 1.4.

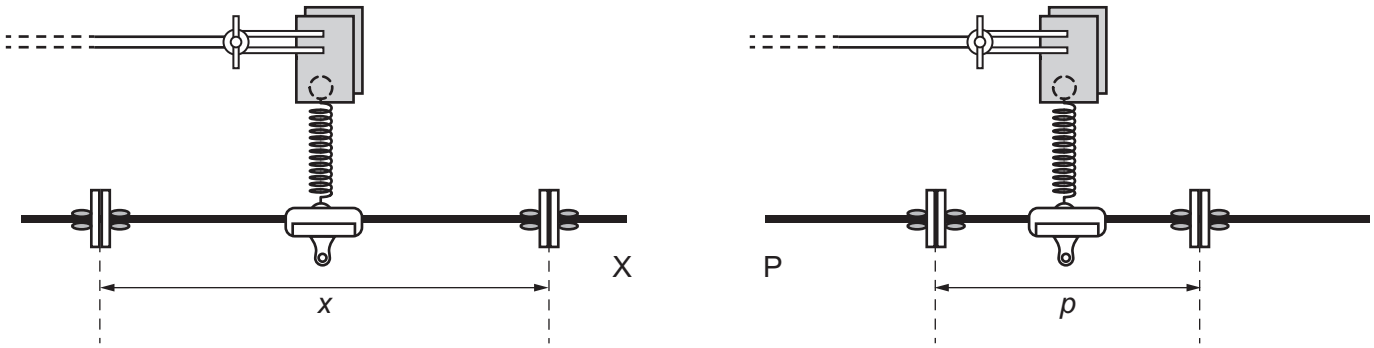

Fig. 1.4

- Gently press the rods down at end X and end P.
- Release the ends at the same time. The ends will oscillate as shown in Fig. 1.5.

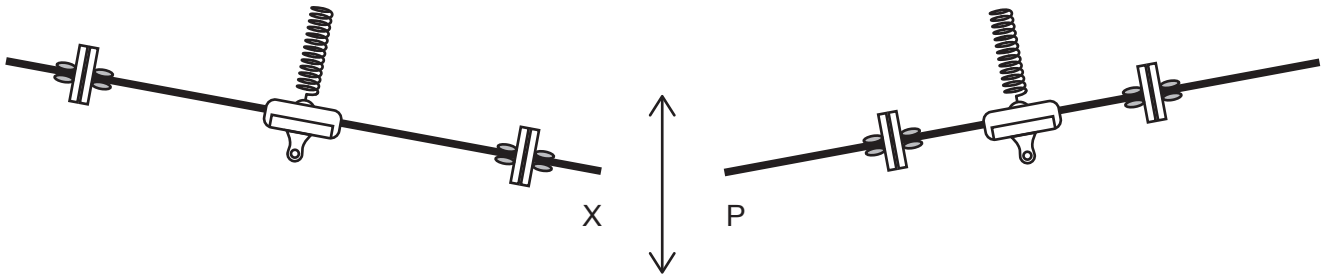

Fig. 1.5

- Watch the oscillations. X and P move in and out of phase.
- Look at P. Count the number *n* of oscillations made by P from release until both ends are back in phase.

n = ... [1]

BLANK PAGE

(d) Change p in the range $14.0\,\text{cm} \leqslant p \leqslant 20.5\,\text{cm}$ and repeat **(c)** until you have six sets of values of p and n.

Keep distance *x* constant.

Record your results in a table. Include values of $\frac{1}{p}$ and $\frac{1}{n}$ in your table.

Record the values of $\frac{1}{n}$ to three significant figures.

[9]

(e) **(i)** Plot a graph of $\frac{1}{n}$ on the y-axis against $\frac{1}{p}$ on the x-axis. [3]

(ii) Draw the straight line of best fit. [1]

(iii) Determine the gradient and y-intercept of this line.

gradient = ...

y-intercept = ...

[2]

(f) It is suggested that the quantities n and p are related by the equation

$$\frac{1}{n} = \frac{A}{p} + B$$

where A and B are constants.

Using your answers in **(e)(iii)**, determine the values of A and B.
Give appropriate units.

A = ...

B = ...
[2]

[Total: 20]

You may not need to use all of the materials provided.

2 In this experiment, you will investigate the flow of oil.

(a) You have been provided with two straws of the same diameter.

(i) Measure and record the length l of the **shorter** straw.

l = ... [1]

(ii) The diameter D of the straw is shown in Fig. 2.1.

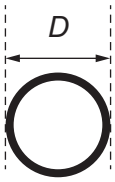

Fig. 2.1

Measure and record D.

D = ... [1]

(iii) Calculate the volume V of the straw using

$$V = \frac{\pi D^2 l}{4}.$$

V = ... [1]

(iv) Justify the number of significant figures that you have given for your value of V.

.....

.....

..... [1]

(b) Draw a circle of radius 2.0 cm on the blank sheet of paper.

(i)
- Place a Petri dish on top of the circle on the paper.
- Use small pieces of adhesive putty at the edge of the Petri dish to secure it to the paper.
- Place a small piece of adhesive putty at the centre of the Petri dish.
- Gently press the straw into the adhesive putty so that the bottom of the straw is sealed by the putty.
- Arrange the apparatus as shown in Fig. 2.2 and Fig. 2.3 with the straw above the centre of the circle drawn on the paper.

TOP VIEW

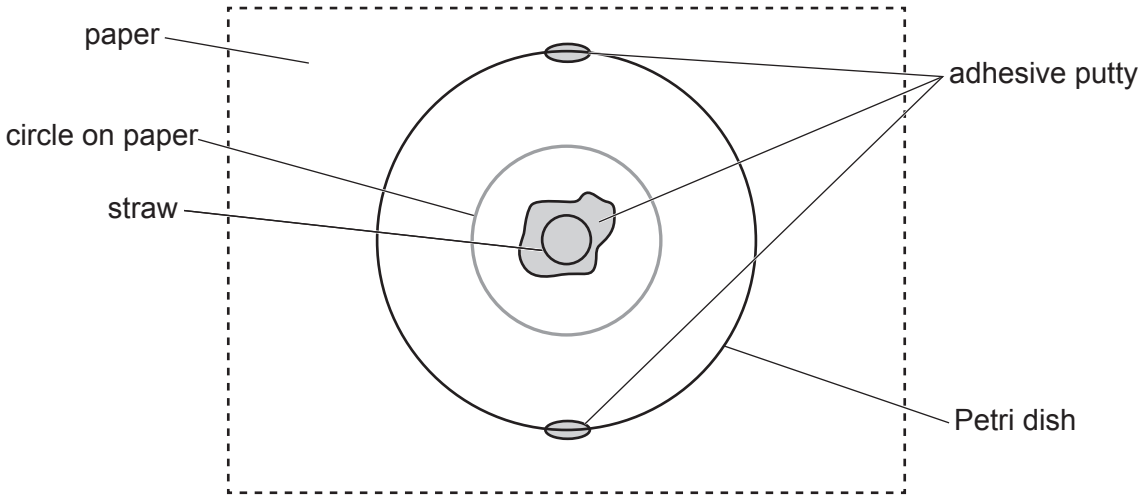

Fig. 2.2

SIDE VIEW

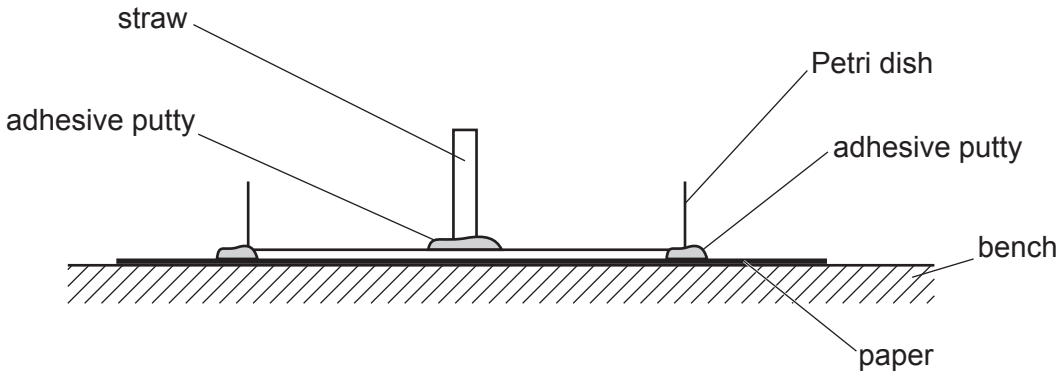

Fig. 2.3

- You have been provided with plastic gloves to wear when handling the oil.

  Use the dropper to fill the straw with oil.

- When the straw is lifted from the putty, the oil spreads out. The time taken for the first part of the oil to reach the circle is *t*.

  Gently lift the straw away from the putty.

- Measure and record *t*.

t = ... [2]

(ii) Estimate the percentage uncertainty in your value of *t*. Show your working.

percentage uncertainty = ... [1]

(c) Repeat **(a)(i)**, **(a)(iii)** and **(b)(i)** using the **longer** straw.

l = ...

V = ...

t = ...
[3]

(d) It is suggested that the relationship between V and t is

$$V = \frac{k}{\sqrt{t}}$$

where k is a constant.

(i) Using your data, calculate two values of k.

first value of k = ...

second value of k = ...
[1]

(ii) Explain whether your results support the suggested relationship.

.....

.....

.....

..... [1]

(e) **(i)** Describe four sources of uncertainty or limitations of the procedure for this experiment.

1. .....

.....

2. .....

.....

3. .....

.....

4. .....

.....

[4]

(ii) Describe four improvements that could be made to this experiment. You may suggest the use of other apparatus or different procedures.

1. .....

.....

2. .....

.....

3. .....

.....

4. .....

.....

[4]

[Total: 20]

© UCLES 2021

BLANK PAGE

BLANK PAGE

BLANK PAGE

Permission to reproduce items where third-party owned material protected by copyright is included has been sought and cleared where possible. Every reasonable effort has been made by the publisher (UCLES) to trace copyright holders, but if any items requiring clearance have unwittingly been included, the publisher will be pleased to make amends at the earliest possible opportunity.

To avoid the issue of disclosure of answer-related information to candidates, all copyright acknowledgements are reproduced online in the Cambridge Assessment International Education Copyright Acknowledgements Booklet. This is produced for each series of examinations and is freely available to download at www.cambridgeinternational.org after the live examination series.

Cambridge Assessment International Education is part of the Cambridge Assessment Group. Cambridge Assessment is the brand name of the University of Cambridge Local Examinations Syndicate (UCLES), which itself is a department of the University of Cambridge.

© UCLES 2021

Cambridge Assessment International Education

Cambridge International AS & A Level

CANDIDATE NAME	

CENTRE NUMBER						CANDIDATE NUMBER				

2952326779

PHYSICS **9702/33**

Paper 3 Advanced Practical Skills 1 **October/November 2021**

2 hours

You must answer on the question paper.

You will need: The materials and apparatus listed in the confidential instructions

INSTRUCTIONS

- Answer **all** questions.
- Use a black or dark blue pen. You may use an HB pencil for any diagrams or graphs.
- Write your name, centre number and candidate number in the boxes at the top of the page.
- Write your answer to each question in the space provided.
- Do **not** use an erasable pen or correction fluid.
- Do **not** write on any bar codes.
- You will be allowed to work with the apparatus for a maximum of 1 hour for each question.
- You should record all your observations in the spaces provided in the question paper as soon as these observations are made.
- You may use a calculator.
- You should show all your working and use appropriate units.

INFORMATION

- The total mark for this paper is 40.
- The number of marks for each question or part question is shown in brackets [ ].

For Examiner's Use	
1	
2	
Total	

This document has **12** pages. Any blank pages are indicated.

DC (CJ/CT) 208336/3
© UCLES 2021

BLANK PAGE

You may not need to use all of the materials provided.

1 In this experiment, you will investigate combinations of resistors in an electrical circuit.

(a) Fig. 1.1. shows an electrical circuit.

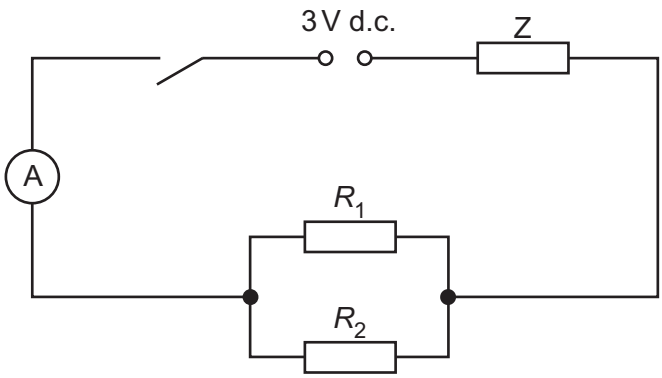

Fig. 1.1

- Set up the circuit shown in Fig. 1.1 using R_1 = 33 Ω and R_2 = 82 Ω.
- Calculate $\frac{R_1R_2}{(R_1 + R_2)}$.

$\frac{R_1R_2}{(R_1 + R_2)}$ = ... Ω

- Close the switch.
- Record the ammeter reading I.

I = ...

- Open the switch.

[1]

(b) Use six different pairs of resistors to provide six different values of $\frac{R_1R_2}{(R_1 + R_2)}$.

For each arrangement, record R_1, R_2 and I in a table. Include values of $\frac{R_1R_2}{(R_1 + R_2)}$ and $\frac{1}{I}$ in your table.

[10]

(c) **(i)** Plot a graph of $\frac{1}{I}$ on the *y*-axis against $\frac{R_1R_2}{(R_1 + R_2)}$ on the *x*-axis. [3]

(ii) Draw the straight line of best fit. [1]

(iii) Determine the gradient and *y*-intercept of this line.

gradient = ...

y-intercept = ...

[2]

(d) **(i)** It is suggested that the quantities I and $\frac{R_1R_2}{(R_1 + R_2)}$ are related by the equation

$$\frac{1}{I} = P\left[\frac{R_1R_2}{(R_1 + R_2)}\right] + Q$$

where P and Q are constants.

Using your answers to **(c)(iii)**, determine the values of P and Q.
Give appropriate units.

P = ...

Q = ...
[2]

(ii) The constants P and Q are related to the electromotive force (e.m.f.) E of the power supply and the resistance Z of resistor Z by

$$P = \frac{1}{E} \text{ and } Q = \frac{Z}{E}.$$

Determine the values of E and Z.
Give appropriate units.

E = ...

Z = ...
[1]

[Total: 20]

You may not need to use all of the materials provided.

2 In this experiment, you will investigate the time taken for filter papers to fall in air.

(a) (i) • You have been provided with filter papers of two different sizes.

Take one sheet of the **smaller** filter paper.

• The diameter of one sheet of filter paper is *d*, as shown in Fig. 2.1.

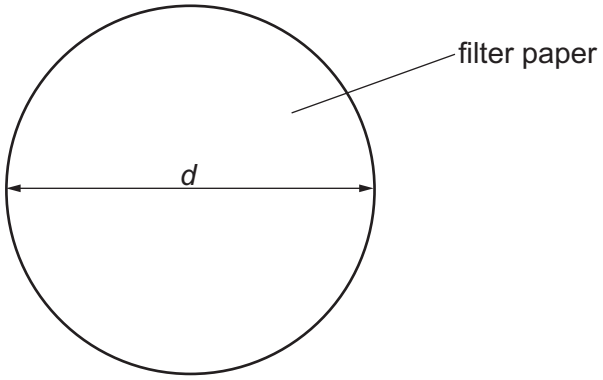

Fig. 2.1

Measure and record *d*.

d = ... cm [2]

(ii) Calculate the area *A* of the filter paper using

$$A = \frac{\pi d^2}{4}.$$

A = ...cm^2 [1]

(iii) Justify the number of significant figures that you have given for your value of *A*.

.....

.....

..... [1]

(b) **(i)** • Set up the apparatus as shown in Fig. 2.2.

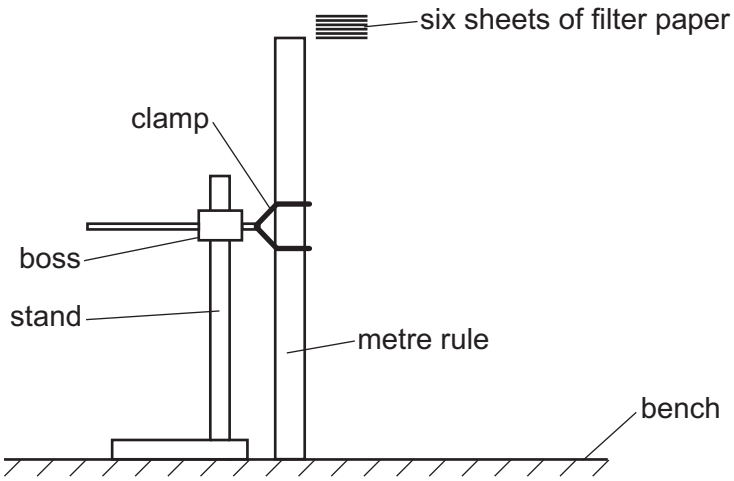

Fig. 2.2

- Hold the six sheets of the smaller filter paper at the top of the metre rule, as shown in Fig. 2.2.
- Release the filter papers and start the stop-watch.
- The time between release and the filter papers hitting the bench is *t*.

  Measure and record *t*.

t = ... s [2]

(ii) Estimate the percentage uncertainty in *t*. Show your working.

percentage uncertainty = ... [1]

(iii) Measure and record the total mass *m* of the sheets of smaller filter paper.

m = ... [1]

(c) **(i)** Repeat **(a)(i)** and **(a)(ii)** using one of the **larger** sheets of filter paper.

d = ... cm

A = ... cm^2
[1]

(ii) Using two sheets of the larger filter paper, repeat **(b)(i)** and **(b)(iii)**.

t = ... s

m = ...
[1]

(d) It is suggested that the relationship between t, m and A is

$$kt = mA$$

where k is a constant.

(i) Using your data, calculate two values of k.

first value of k = ...

second value of k = ...
[1]

(ii) Explain whether your results support the suggested relationship.

.....

.....

.....

..... [1]

(e) **(i)** Describe four sources of uncertainty or limitations of the procedure for this experiment.

1. .....

.....

2. .....

.....

3. .....

.....

4. .....

.....

[4]

(ii) Describe four improvements that could be made to this experiment. You may suggest the use of other apparatus or different procedures.

1. .....

.....

2. .....

.....

3. .....

.....

4. .....

.....

[4]

[Total: 20]

BLANK PAGE

Permission to reproduce items where third-party owned material protected by copyright is included has been sought and cleared where possible. Every reasonable effort has been made by the publisher (UCLES) to trace copyright holders, but if any items requiring clearance have unwittingly been included, the publisher will be pleased to make amends at the earliest possible opportunity.

To avoid the issue of disclosure of answer-related information to candidates, all copyright acknowledgements are reproduced online in the Cambridge Assessment International Education Copyright Acknowledgements Booklet. This is produced for each series of examinations and is freely available to download at www.cambridgeinternational.org after the live examination series.

Cambridge Assessment International Education is part of the Cambridge Assessment Group. Cambridge Assessment is the brand name of the University of Cambridge Local Examinations Syndicate (UCLES), which itself is a department of the University of Cambridge.

© UCLES 2021

Cambridge Assessment International Education

Cambridge International AS & A Level

CANDIDATE NAME	

CENTRE NUMBER						CANDIDATE NUMBER				

PHYSICS **9702/34**

Paper 3 Advanced Practical Skills 2 **October/November 2021**

2 hours

You must answer on the question paper.

You will need: The materials and apparatus listed in the confidential instructions

INSTRUCTIONS

- Answer **all** questions.
- Use a black or dark blue pen. You may use an HB pencil for any diagrams or graphs.
- Write your name, centre number and candidate number in the boxes at the top of the page.
- Write your answer to each question in the space provided.
- Do **not** use an erasable pen or correction fluid.
- Do **not** write on any bar codes.
- You will be allowed to work with the apparatus for a maximum of 1 hour for each question.
- You should record all your observations in the spaces provided in the question paper as soon as these observations are made.
- You may use a calculator.
- You should show all your working and use appropriate units.

INFORMATION

- The total mark for this paper is 40.
- The number of marks for each question or part question is shown in brackets [ ].

For Examiner's Use	
1	
2	
Total	

This document has **12** pages.

DC (MB/CGW) 204992/2
© UCLES 2021

You may not need to use all of the materials provided.

1 In this experiment you will investigate an electrical circuit.

(a) (i) • Assemble the circuit shown in Fig. 1.1.

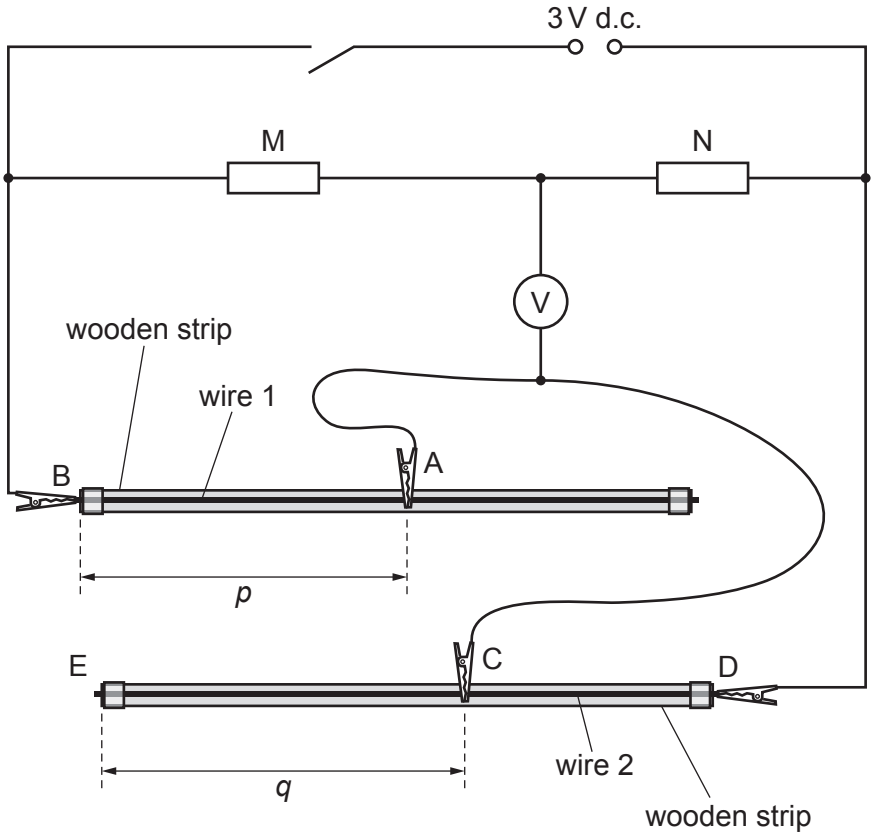

Fig. 1.1

- A, B, C and D are crocodile clips.

  Connect A approximately half-way along wire 1.

- Measure and record the distance *p* between B and A, as shown in Fig. 1.1.

  p = ... cm

- Close the switch.

- Test your circuit by placing C at end E of wire 2. The voltmeter reading should be non-zero. Record the voltmeter reading.

  voltmeter reading = ... V

- Open the switch.

[1]

(ii)
- Close the switch.
- Adjust the position of C on wire 2 until the voltmeter reading is as close as possible to zero.
- The distance between C and E is q, as shown in Fig. 1.1.

  Measure and record q.

  q = ... cm

- Open the switch.

[1]

(b) Move A to a new position on wire 1. Measure and record p and repeat **(a)(ii)**. Repeat until you have six sets of values for p and q.

Record your results in a table. Include values of $\frac{1}{q}$ and $\frac{p}{q}$ in your table.

[10]

(c) **(i)** Plot a graph of $\frac{1}{q}$ on the y-axis against $\frac{p}{q}$ on the x-axis. [3]

(ii) Draw the straight line of best fit. [1]

(iii) Determine the gradient and y-intercept of this line.

gradient = ...

y-intercept = ...

[2]

(d) It is suggested that the quantities p and q are related by the equation

$$\frac{1}{q} = a\left(\frac{p}{q}\right) + b$$

where a and b are constants.

Use your answers in **(c)(iii)** to determine the values of a and b.
Give appropriate units.

a = ...

b = ...
[2]

[Total: 20]

You may not need to use all of the materials provided.

2 In this experiment, you will investigate the oscillations of a suspended rod.

(a) (i) • You are provided with a pin pushed into a cork.

Clamp the cork to the stand so that the pin is horizontal and approximately 50 cm above the bench.

• You are provided with a rod with two strings attached.

The distance between the two holes in the rod is *y*, as shown in Fig. 2.1.

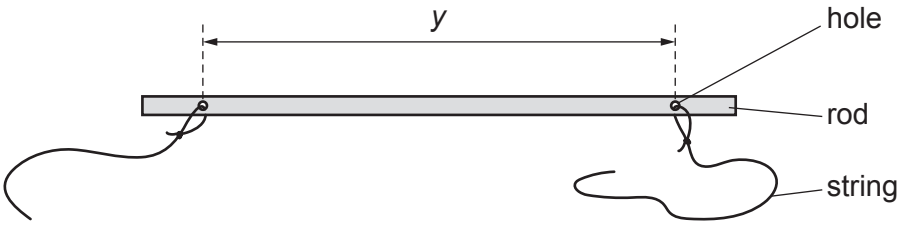

Fig. 2.1

Measure and record *y*.

y = ... cm [1]

(ii) ● Set up the apparatus as shown in Fig. 2.2.

● Tie the two strings together so that, when the rod is suspended from the pin, the top of the rod is approximately 30 cm below the pin.

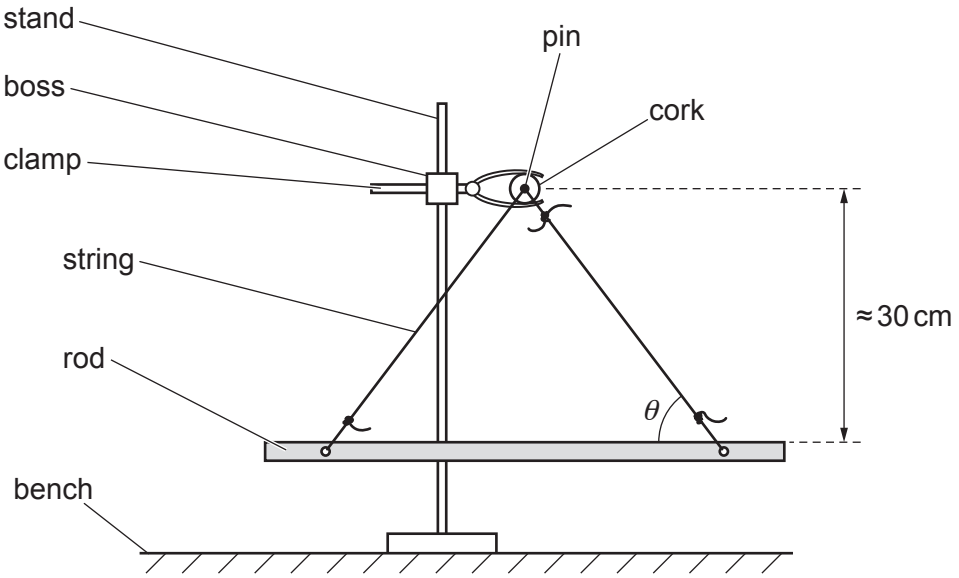

Fig. 2.2

● Ensure that the rod is horizontal.

● The angle between the rod and the string is θ, as shown in Fig. 2.2.

Measure and record θ.

θ = ...° [1]

(iii) Estimate the percentage uncertainty in your value of θ. Show your working.

percentage uncertainty = ... [1]

(iv) Calculate D where

$$D = \frac{y \tan \theta}{2}.$$

D = ... [1]

(v) Justify the number of significant figures that you have given for your value of *D*.

.....

.....

..... [1]

(b) (i) • Push the rod approximately 2 cm **to one side** and then release it so that it swings as shown in Fig. 2.3.

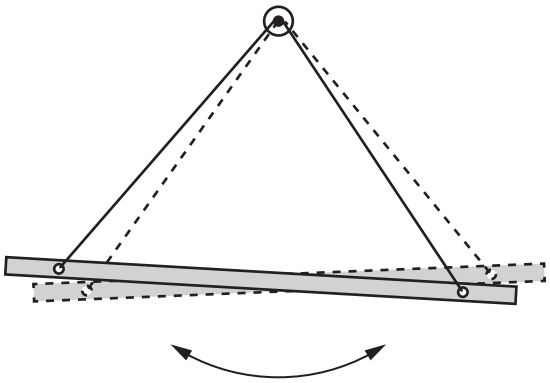

Fig. 2.3

• Take measurements to determine the period *S* of these oscillations.

S = ... [2]

(ii) • Return the rod to a horizontal and stationary position.

• Push the whole rod approximately 2 cm **away from you** and release it so that it swings towards and away from you.
As it swings, the rod should always remain parallel to its stationary position with no twisting or sideways motion.

• Take measurements to determine the period *B* of these oscillations.

B = ... [1]

(c) ● Adjust the lengths of the two strings so that, when the rod is suspended from the pin and horizontal, the top of the rod is approximately 15 cm below the pin.

● Ensure that the rod is horizontal.

● Measure and record θ.

θ = ... °

● Calculate D.

D = ...

● Repeat **(b)**.

S = ...

B = ...
[2]

(d) It is suggested that the relationship between D, S and B is

$$\frac{k}{D} = (S^2 - B^2)$$

where k is a constant.

(i) Using your data, calculate two values of k.

first value of k = ...

second value of k = ...
[1]

(ii) Explain whether your results support the suggested relationship.

.....

.....

.....

..... [1]

(e) **(i)** Describe four sources of uncertainty or limitations of the procedure for this experiment.

1. .....

.....

2. .....

.....

3. .....

.....

4. .....

.....

[4]

(ii) Describe four improvements that could be made to this experiment. You may suggest the use of other apparatus or different procedures.

1. .....

.....

2. .....

.....

3. .....

.....

4. .....

.....

[4]

[Total: 20]

Permission to reproduce items where third-party owned material protected by copyright is included has been sought and cleared where possible. Every reasonable effort has been made by the publisher (UCLES) to trace copyright holders, but if any items requiring clearance have unwittingly been included, the publisher will be pleased to make amends at the earliest possible opportunity.

To avoid the issue of disclosure of answer-related information to candidates, all copyright acknowledgements are reproduced online in the Cambridge Assessment International Education Copyright Acknowledgements Booklet. This is produced for each series of examinations and is freely available to download at www.cambridgeinternational.org after the live examination series.

Cambridge Assessment International Education is part of the Cambridge Assessment Group. Cambridge Assessment is the brand name of the University of Cambridge Local Examinations Syndicate (UCLES), which itself is a department of the University of Cambridge.

© UCLES 2021

Cambridge Assessment International Education

Cambridge International AS & A Level

CANDIDATE NAME	

CENTRE NUMBER						CANDIDATE NUMBER				

PHYSICS **9702/35**

Paper 3 Advanced Practical Skills 1 **October/November 2021**

2 hours

You must answer on the question paper.

You will need: The materials and apparatus listed in the confidential instructions

INSTRUCTIONS

- Answer **all** questions.
- Use a black or dark blue pen. You may use an HB pencil for any diagrams or graphs.
- Write your name, centre number and candidate number in the boxes at the top of the page.
- Write your answer to each question in the space provided.
- Do **not** use an erasable pen or correction fluid.
- Do **not** write on any bar codes.
- You will be allowed to work with the apparatus for a maximum of 1 hour for each question.
- You should record all your observations in the spaces provided in the question paper as soon as these observations are made.
- You may use a calculator.
- You should show all your working and use appropriate units.

INFORMATION

- The total mark for this paper is 40.
- The number of marks for each question or part question is shown in brackets [ ].

For Examiner's Use	
1	
2	
Total	

This document has **12** pages. Any blank pages are indicated.

DC (PQ/CB) 208277/2
© UCLES 2021

You may not need to use all of the materials provided.

1 In this experiment, you will investigate the oscillations of a metre rule.

(a) ● Set up the apparatus as shown in Fig. 1.1, with the scales on the metre rules facing upwards.

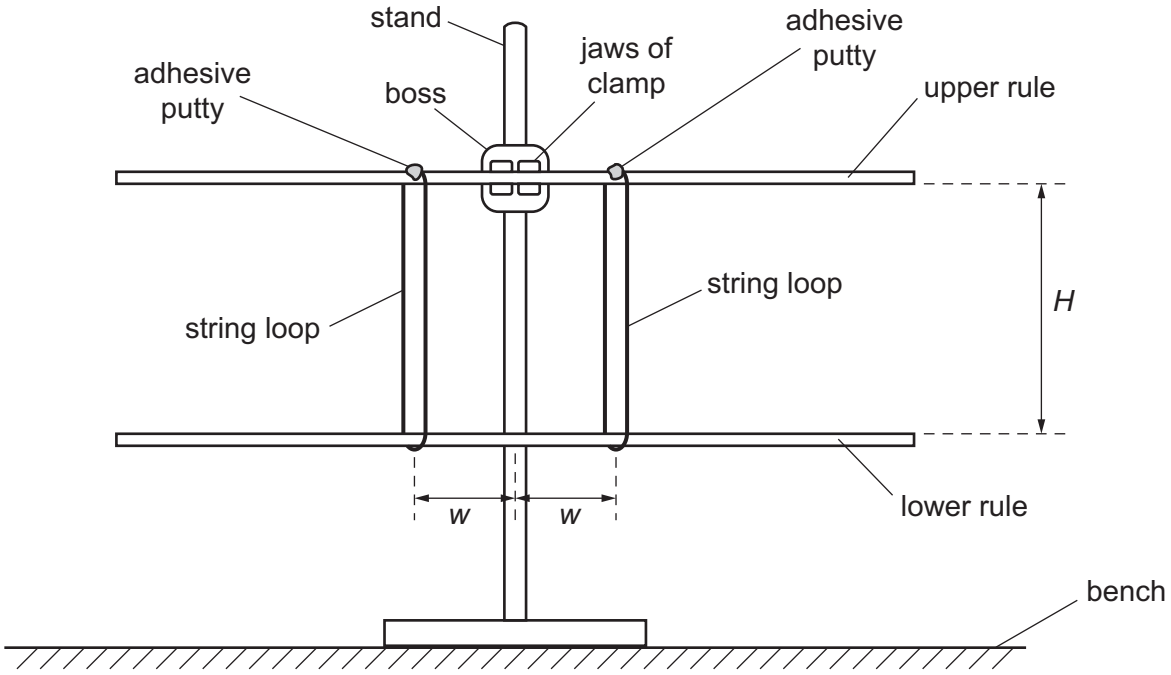

Fig. 1.1

- Adjust the clamp so that the upper rule is parallel to the bench.
- Adjust the positions of the string loops so that each loop is approximately 40 cm from the nearest ends of the two rules.
- The vertical distance between the two rules is *H*.

  Measure and record *H*.

H = ... [1]

(b) ● For both rules, the distance between the 50 cm mark and each string loop is *w*, as shown in Fig. 1.1.

Adjust the positions of the string loops until the distances *w* are equal and approximately 10 cm.

● Measure and record *w*.

w = ... cm

● Gently rotate the lower rule and release it. The lower rule will oscillate as shown in Fig. 1.2.

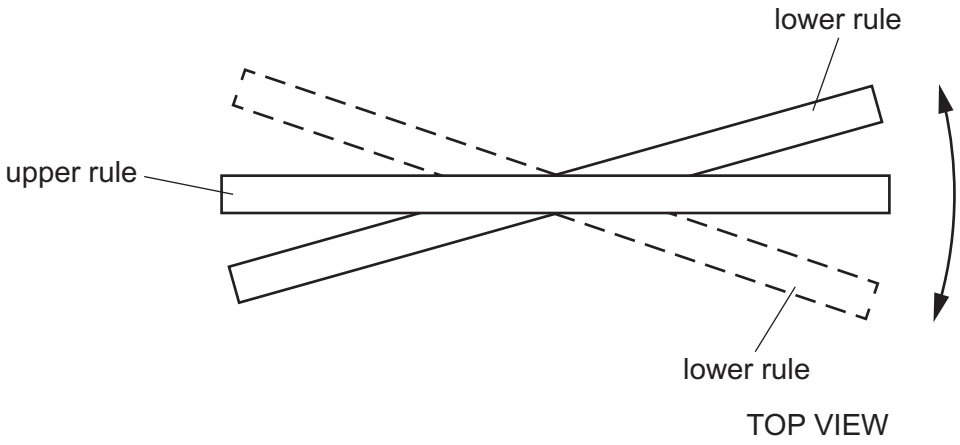

Fig. 1.2

● Take measurements to determine the period *T* of the oscillations.

T = ... s
[2]

(c) Vary w in the range $5.0\,\text{cm} \leqslant w \leqslant 20.0\,\text{cm}$ and determine six sets of readings of w and T.

Record your results in a table. Include values of $\frac{1}{w}$ in your table.

[9]

(d) **(i)** Plot a graph of T on the y-axis against $\frac{1}{w}$ on the x-axis. [3]

(ii) Draw the straight line of best fit. [1]

(iii) Determine the gradient of this line.

gradient = ... [1]

© UCLES 2021

(e) **(i)** It is suggested that the quantities T and w are related by the equation

$$T = \frac{B}{w}$$

where B is a constant.

Using your answer to **(d)(iii)**, determine a value for B.
Give an appropriate unit.

B = ... [2]

(ii) It is suggested that B is given by the equation

$$B^2 = \frac{3\pi^2 H^3}{g}$$

where g is the acceleration of free fall.

Using your answers to **(a)** and **(e)(i)**, determine a value for g.

g = ... $m\,s^{-2}$ [1]

[Total: 20]

© UCLES 2021

You may not need to use all of the materials provided.

2 In this experiment, you will determine the weight of a metre rule.

(a) (i) ● Attach the spring to the clamp.

● Suspend the mass hanger from the spring as shown in Fig. 2.1.

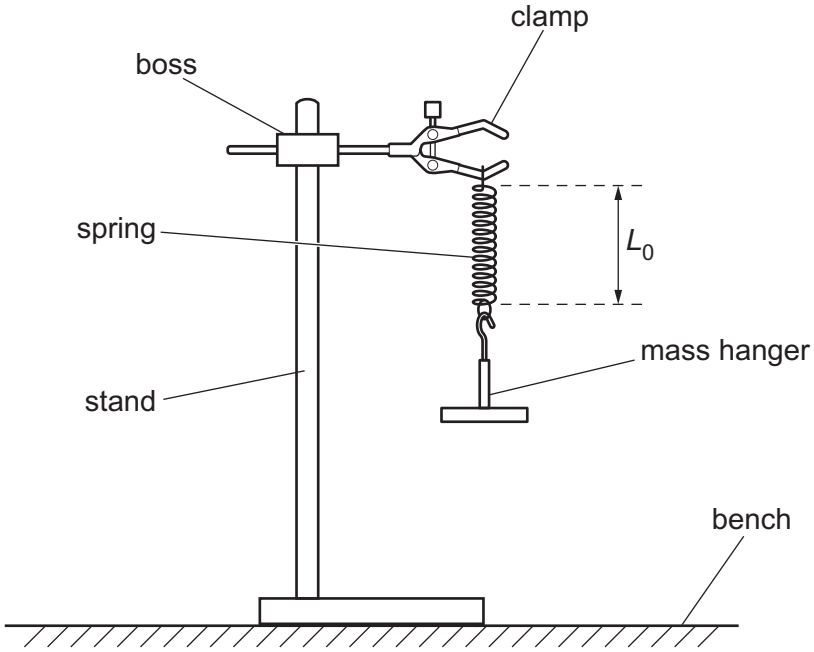

Fig. 2.1

● The length of the coiled section of the spring is L_0.

Measure and record L_0.

L_0 = ... cm [1]

(ii) Estimate the percentage uncertainty in your value of L_0. Show your working.

percentage uncertainty = ... [1]

(b) **(i)**

- Add an additional mass of 0.100 kg to the mass hanger.
- The new length of the coiled section of the spring is L_1.

  Measure and record L_1.

L_1 = ... cm

- Remove the 0.100 kg mass.

[1]

(ii) Calculate $(L_1 - L_0)$.

$(L_1 - L_0)$ = ... cm [1]

(iii) The spring constant k is given by the equation

$$k = \frac{F}{(L_1 - L_0)}$$

where F is 0.981 N.

Calculate k.

k = ... [1]

(iv) Justify the number of significant figures that you have given for your value of k.

.....

.....

..... [1]

(c) (i) ● Set up the apparatus as shown in Fig. 2.2.

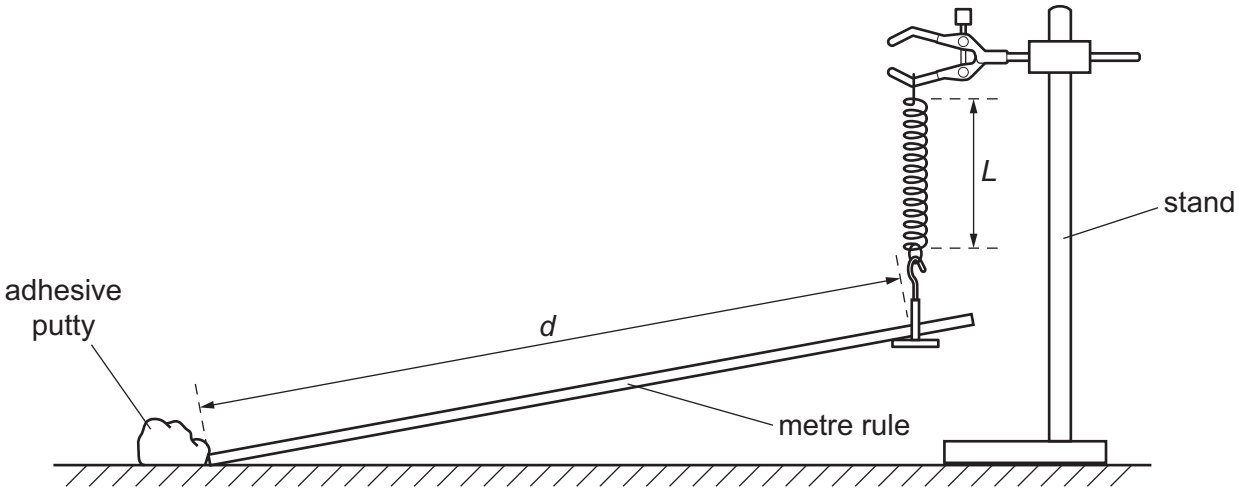

Fig. 2.2

- Support the rule on the mass hanger. You may need to use some of the adhesive putty to stop the rule from slipping off the mass hanger.
- The distance between the lower end of the rule and the mass hanger is *d*, as shown in Fig. 2.2. The length of the coiled section of the spring is *L*.

  Adjust the apparatus so that *d* is approximately 90 cm and the spring is vertical.
- Measure and record *d* and *L*.

d = ... cm

L = ... cm

- Using your answer to **(a)(i)**, calculate $(L - L_0)$.

$(L - L_0)$ = ... cm
[1]

(ii) Repeat **(c)(i)** with a distance *d* of approximately 60 cm.

d = ... cm

L = ... cm

$(L - L_0)$ = ... cm
[2]

(d) It is suggested that the relationship between $(L - L_0)$ and d is

$$C = d(L - L_0)$$

where C is a constant.

(i) Using your data, calculate two values of C.

first value of C = ...

second value of C = ...
[1]

(ii) Explain whether your results support the suggested relationship.

.....

.....

.....

..... [1]

(e) The constant C is given by

$$C = \frac{Wd_0}{2k}$$

where d_0 is the length and W is the weight of the metre rule.

Use your second value of C to determine W.

W = ... [1]

(f) **(i)** Describe four sources of uncertainty or limitations of the procedure for this experiment.

1. .....

.....

2. .....

.....

3. .....

.....

4. .....

.....

[4]

(ii) Describe four improvements that could be made to this experiment. You may suggest the use of other apparatus or different procedures.

1. .....

.....

2. .....

.....

3. .....

.....

4. .....

.....

[4]

[Total: 20]

BLANK PAGE

Permission to reproduce items where third-party owned material protected by copyright is included has been sought and cleared where possible. Every reasonable effort has been made by the publisher (UCLES) to trace copyright holders, but if any items requiring clearance have unwittingly been included, the publisher will be pleased to make amends at the earliest possible opportunity.

To avoid the issue of disclosure of answer-related information to candidates, all copyright acknowledgements are reproduced online in the Cambridge Assessment International Education Copyright Acknowledgements Booklet. This is produced for each series of examinations and is freely available to download at www.cambridgeinternational.org after the live examination series.

Cambridge Assessment International Education is part of the Cambridge Assessment Group. Cambridge Assessment is the brand name of the University of Cambridge Local Examinations Syndicate (UCLES), which itself is a department of the University of Cambridge.

© UCLES 2021

Cambridge Assessment International Education

Cambridge International AS & A Level

CANDIDATE NAME	

CENTRE NUMBER						CANDIDATE NUMBER				

2389085861

PHYSICS **9702/36**

Paper 3 Advanced Practical Skills 2 **October/November 2021**

2 hours

You must answer on the question paper.

You will need: The materials and apparatus listed in the confidential instructions

INSTRUCTIONS

- Answer **all** questions.
- Use a black or dark blue pen. You may use an HB pencil for any diagrams or graphs.
- Write your name, centre number and candidate number in the boxes at the top of the page.
- Write your answer to each question in the space provided.
- Do **not** use an erasable pen or correction fluid.
- Do **not** write on any bar codes.
- You will be allowed to work with the apparatus for a maximum of 1 hour for each question.
- You should record all your observations in the spaces provided in the question paper as soon as these observations are made.
- You may use a calculator.
- You should show all your working and use appropriate units.

INFORMATION

- The total mark for this paper is 40.
- The number of marks for each question or part question is shown in brackets [ ].

For Examiner's Use	
1	
2	
Total	

This document has **16** pages. Any blank pages are indicated.

DC (MB/AR) 204990/3
© UCLES 2021

You may not need to use all of the materials provided.

1 In this experiment, you will investigate the oscillations of a wooden strip.

(a) (i) • Assemble the apparatus as shown in Fig. 1.1 with the nail held securely in the boss.

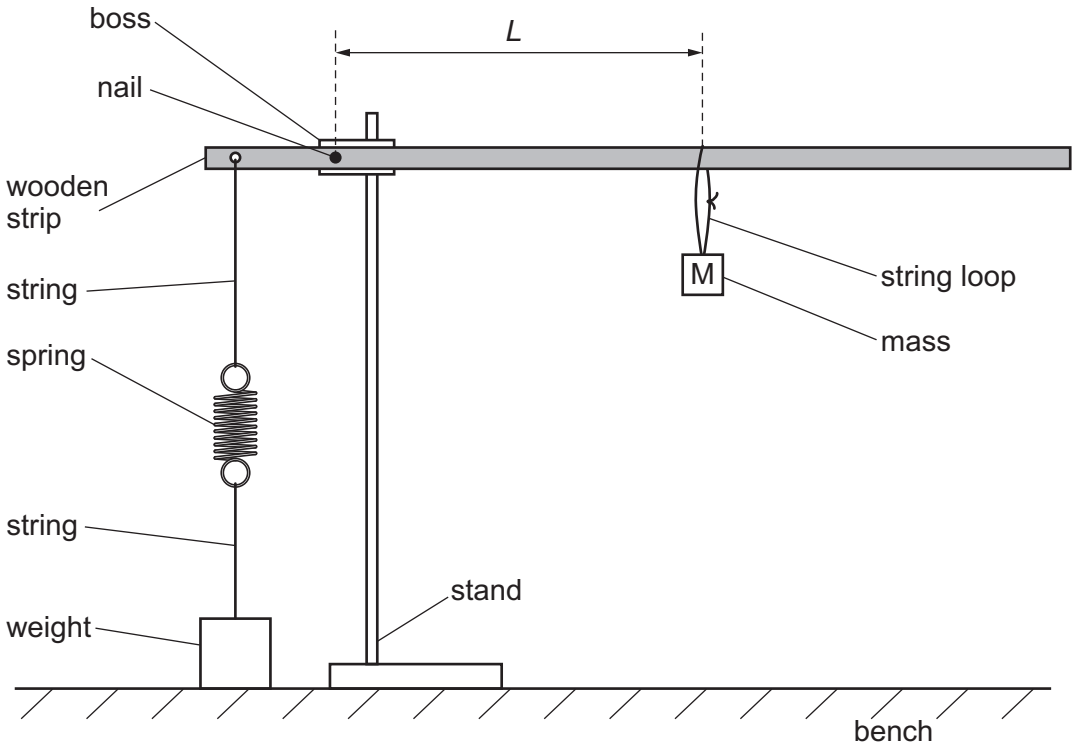

Fig. 1.1

- Hang the mass labelled M midway between the nail and the end of the strip.
- Adjust the height of the boss so that the strip is parallel to the bench.
- Move the weight so that the spring is vertical.
- *L* is the distance between the nail and the string loop attached to M, as shown in Fig. 1.1.

  Measure and record *L*.

L = ... [1]

(ii)
- Pull the free end of the strip down by approximately 2 cm. Release the strip so that it oscillates.
- Take measurements to determine the period T of the oscillations.

T = ... s [2]

(b) ● Move M along the strip and adjust the apparatus so that the strip is parallel to the bench.

● Measure L and determine T.

● Repeat until you have six sets of values of L and T.
Record your results in a table. Include values of L^2 and T^2 in your table.

[9]

(c) **(i)** Plot a graph of T^2 on the y-axis against L^2 on the x-axis. [3]

(ii) Draw the straight line of best fit. [1]

(iii) Determine the gradient and y-intercept of this line.

gradient = ...

y-intercept = ...
[2]

(d) It is suggested that the quantities T and L are related by the equation

$$T^2 = aL^2 + b$$

where a and b are constants.

Use your answers in **(c)(iii)** to determine the values of a and b.
Give appropriate units.

a = ...

b = ...
[2]

[Total: 20]

You may not need to use all of the materials provided.

2 In this experiment, you will investigate the amount of air needed to lift an underwater load.

(a) You are provided with a syringe attached to a long tube containing a wire.

- Bend the end of the tube as shown in Fig. 2.1.

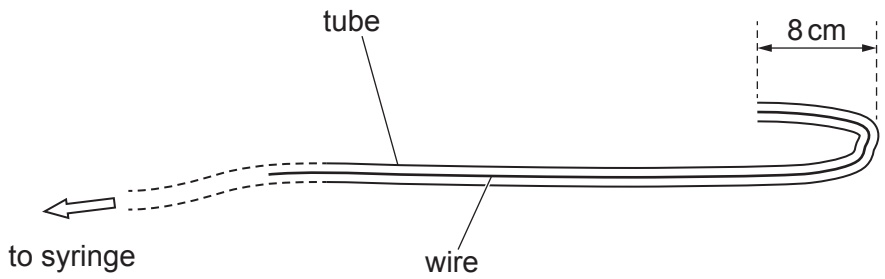

Fig. 2.1

- Pull the plunger of the syringe to the 50 cm^3 mark (1 cm^3 = 1 ml).

- Bend the tube and hook it over the container so that the end is approximately 11 cm above the bottom of the container, as shown in Fig. 2.2.

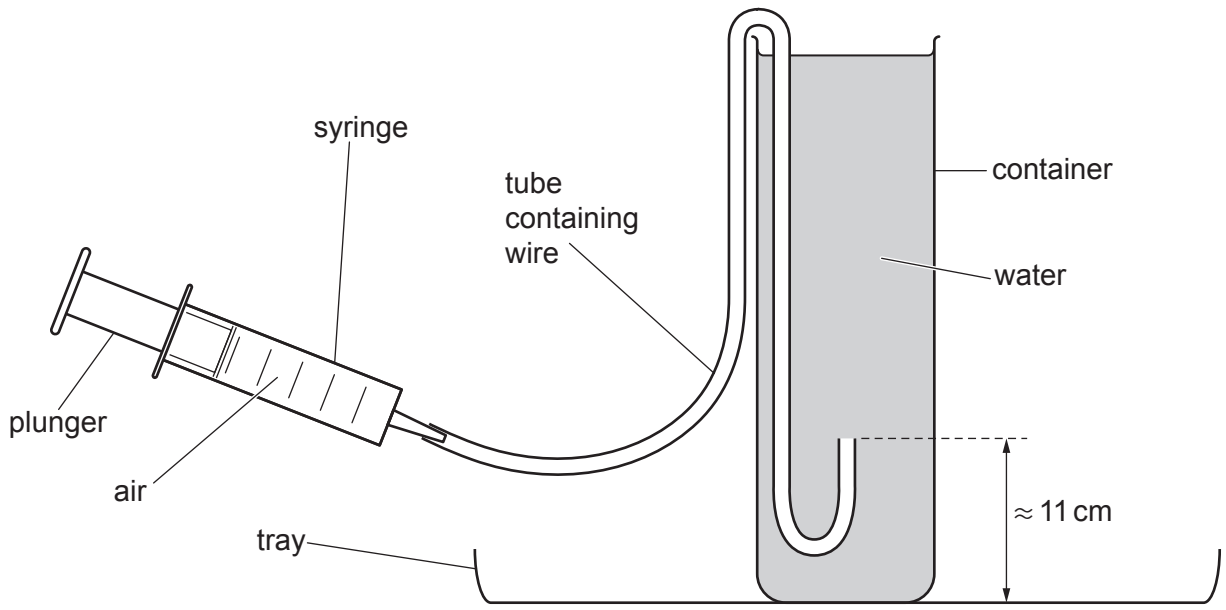

Fig. 2.2

(i) You have been provided with a set of metal rings.

Take measurements to determine the average thickness t of the rings.
Show your working.

t = ... cm [1]

(ii) Measure and record the inner diameter d_1 and the outer diameter d_2 of one of the metal rings, as shown in Fig. 2.3.

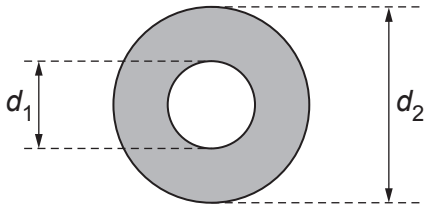

Fig. 2.3

d_1 = ... cm

d_2 = ... cm
[1]

(iii) Calculate the volume V_R of a metal ring using

$$V_R = \frac{\pi t(d_2^2 - d_1^2)}{4}.$$

V_R = ... cm^3 [1]

(iv) Justify the number of significant figures that you have given for your value of V_R.

.....

.....

..... [1]

(b) You have been provided with a paper clip and a plastic cup with string attached.

(i) ● Bend the paper clip into a hook shape as shown in Fig. 2.4. Add 8 metal rings to the paper clip and hook it onto the string loop, as shown in Fig. 2.4.

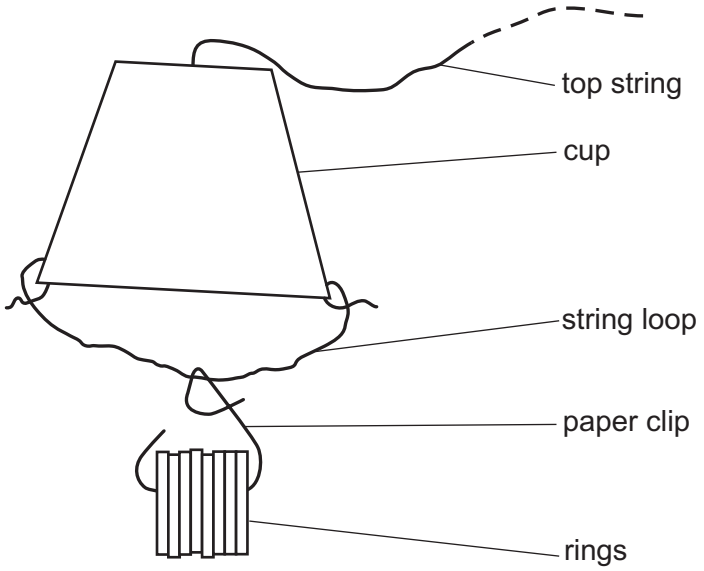

Fig. 2.4

● Lower the cup into the water. Ensure that the cup is **completely** filled with water.

● Use the top string to position the cup over the end of the tube, as shown in Fig. 2.5.

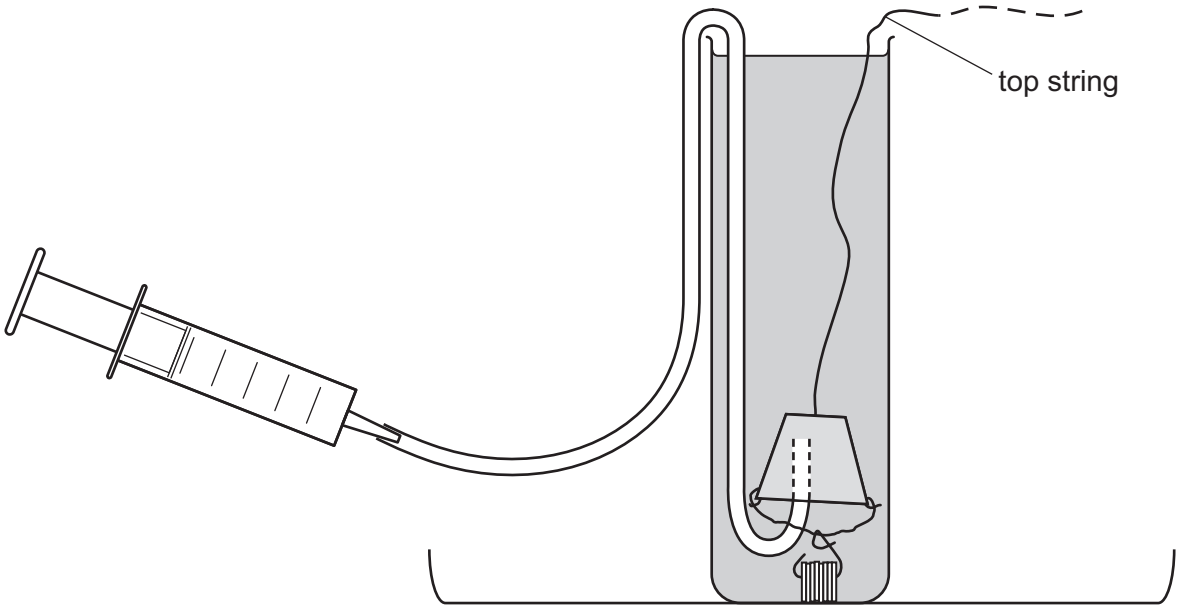

Fig. 2.5

● Record the initial reading x_1 from the syringe scale.

x_1 = ... cm^3 [1]

(ii) ● Slowly press the plunger of the syringe so that air enters the cup.
Continue until the cup starts to lift the rings towards the surface of the water.

● Record the final reading x_2 from the syringe scale.

x_2 = ... cm^3

● Calculate the volume of air V_A in the cup using

$$V_A = x_1 - x_2.$$

V_A = ... cm^3
[2]

(iii) Estimate the percentage uncertainty in your value of V_A. Show your working.

percentage uncertainty = ... [1]

(c)
- Remove the cup and the tube from the container of water.
- Pull the plunger of the syringe to the 50 cm^3 mark to draw air into the syringe.
- Replace the tube in the container of water.
- Repeat **(b)(i)** and **(b)(ii)** using 12 metal rings.

x_1 = ... cm^3

x_2 = ... cm^3

V_A = ... cm^3
[2]

(d) **(i)** The mass M of one metal ring is given on the card.

- Write down the value of M.

M = ... g

- The number of rings attached to the paper clip is n.
  It is suggested that the relationship between n, M, V_R and V_A is

$$nM = k(nV_R + V_A)$$

where k is a constant.

Using your data, calculate two values of k.

first value of k = ...

second value of k = ...
[1]

(ii) Explain whether your results support the suggested relationship.

.....

.....

.....

..... [1]

(e) **(i)** Describe four sources of uncertainty or limitations of the procedure for this experiment.

1. .....

.....

2. .....

.....

3. .....

.....

4. .....

.....

[4]

(ii) Describe four improvements that could be made to this experiment. You may suggest the use of other apparatus or different procedures.

1. .....

.....

2. .....

.....

3. .....

.....

4. .....

.....

[4]

[Total: 20]

© UCLES 2021

BLANK PAGE

BLANK PAGE

BLANK PAGE

Permission to reproduce items where third-party owned material protected by copyright is included has been sought and cleared where possible. Every reasonable effort has been made by the publisher (UCLES) to trace copyright holders, but if any items requiring clearance have unwittingly been included, the publisher will be pleased to make amends at the earliest possible opportunity.

To avoid the issue of disclosure of answer-related information to candidates, all copyright acknowledgements are reproduced online in the Cambridge Assessment International Education Copyright Acknowledgements Booklet. This is produced for each series of examinations and is freely available to download at www.cambridgeinternational.org after the live examination series.

Cambridge Assessment International Education is part of the Cambridge Assessment Group. Cambridge Assessment is the brand name of the University of Cambridge Local Examinations Syndicate (UCLES), which itself is a department of the University of Cambridge.

© UCLES 2021