Cambridge Assessment International Education

Cambridge International AS & A Level

CANDIDATE NAME	

CENTRE NUMBER						CANDIDATE NUMBER					

PHYSICS **9702/22**

Paper 2 AS Level Structured Questions **February/March 2024**

1 hour 15 minutes

You must answer on the question paper.

No additional materials are needed.

INSTRUCTIONS

- Answer **all** questions.
- Use a black or dark blue pen. You may use an HB pencil for any diagrams or graphs.
- Write your name, centre number and candidate number in the boxes at the top of the page.
- Write your answer to each question in the space provided.
- Do **not** use an erasable pen or correction fluid.
- Do **not** write on any bar codes.
- You may use a calculator.
- You should show all your working and use appropriate units.

INFORMATION

- The total mark for this paper is 60.
- The number of marks for each question or part question is shown in brackets [ ].

This document has **16** pages. Any blank pages are indicated.

DC (PB/SW) 331324/3
© UCLES 2024

Data

acceleration of free fall	g	=	$9.81\ \mathrm{m\,s^{-2}}$
speed of light in free space	c	=	$3.00 \times 10^{8}\ \mathrm{m\,s^{-1}}$
elementary charge	e	=	$1.60 \times 10^{-19}\ \mathrm{C}$
unified atomic mass unit	$1\ \mathrm{u}$	=	$1.66 \times 10^{-27}\ \mathrm{kg}$
rest mass of proton	m_p	=	$1.67 \times 10^{-27}\ \mathrm{kg}$
rest mass of electron	m_e	=	$9.11 \times 10^{-31}\ \mathrm{kg}$
Avogadro constant	N_A	=	$6.02 \times 10^{23}\ \mathrm{mol^{-1}}$
molar gas constant	R	=	$8.31\ \mathrm{J\,K^{-1}\,mol^{-1}}$
Boltzmann constant	k	=	$1.38 \times 10^{-23}\ \mathrm{J\,K^{-1}}$
gravitational constant	G	=	$6.67 \times 10^{-11}\ \mathrm{N\,m^{2}\,kg^{-2}}$
permittivity of free space	ε_0	=	$8.85 \times 10^{-12}\ \mathrm{F\,m^{-1}}$
	$(\frac{1}{4\pi\varepsilon_0}$	=	$8.99 \times 10^{9}\ \mathrm{m\,F^{-1}})$
Planck constant	h	=	$6.63 \times 10^{-34}\ \mathrm{J\,s}$
Stefan–Boltzmann constant	σ	=	$5.67 \times 10^{-8}\ \mathrm{W\,m^{-2}\,K^{-4}}$

Formulae

uniformly accelerated motion	s	=	$ut + \frac{1}{2}at^2$
	v^2	=	$u^2 + 2as$
hydrostatic pressure	Δp	=	$\rho g \Delta h$
upthrust	F	=	$\rho g V$
Doppler effect for sound waves	f_o	=	$\dfrac{f_s v}{v \pm v_s}$
electric current	I	=	$Anvq$
resistors in series	R	=	$R_1 + R_2 + \ldots$
resistors in parallel	$\dfrac{1}{R}$	=	$\dfrac{1}{R_1} + \dfrac{1}{R_2} + \ldots$

© UCLES 2024

BLANK PAGE

1 **(a)** Table 1.1 lists some SI quantities. Complete the table by indicating with a tick (✓) which rows are SI base quantities.

Table 1.1

quantity	base quantity
current	
energy	
force	
mass	

[1]

(b) Use the definition of power to determine its SI base units.

SI base units ..... [2]

(c) A light meter is used to measure the intensity of light in a classroom. Daylight is incident normally on the sensor of the meter. The sensor has an area of $2.2\,cm^2$. The reading on the meter is $950\,W\,m^{-2}$.

Calculate the power of the daylight incident on the sensor.

power = ... W [3]

[Total: 6]

© UCLES 2024

BLANK PAGE

2 **(a)** Define acceleration.

.....

..... [1]

(b) An Olympic diver stands on a platform above a pool of water, as shown in Fig. 2.1.

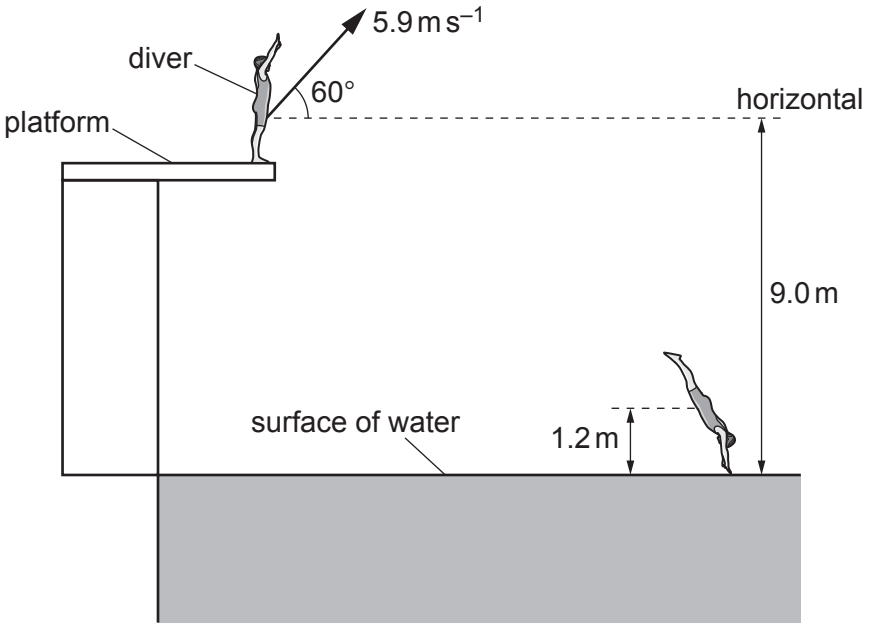

Fig. 2.1 (not to scale)

When the diver is on the platform his centre of gravity is a vertical height of 9.0 m above the surface of the water. The diver jumps from the platform with a velocity of 5.9 m s^{-1} at an angle of 60° to the horizontal.

Air resistance is negligible.

When the diver hits the surface of the water, his centre of gravity is a vertical height of 1.2 m above the surface of the water.

Calculate the speed of the diver at the instant he hits the surface of the water.

speed = ... m s^{-1} [3]

(c) The diver in **(b)** enters the water and decelerates.

(i) Describe and explain the variation of the viscous drag force acting on the diver in the water as he moves downwards.

.....

.....

.....

..... [2]

(ii) The diver has a volume of $7.5 \times 10^{-2}\,m^3$. The density of the water is $1.0 \times 10^3\,kg\,m^{-3}$.

Show that the upthrust acting on the diver when he is entirely underwater is 740 N.

[1]

(iii) At a particular instant when the diver is entirely underwater his horizontal velocity is zero. The viscous drag force acting on him at this instant is 950 N vertically upwards. The diver has mass 78 kg.

Determine the magnitude and direction of the acceleration of the diver.

acceleration = ... $m\,s^{-2}$

direction .....

[4]

[Total: 11]

3 A thin metal wire X, of diameter 1.2×10^{-3} m, is used to suspend a model planet, as shown in Fig. 3.1.

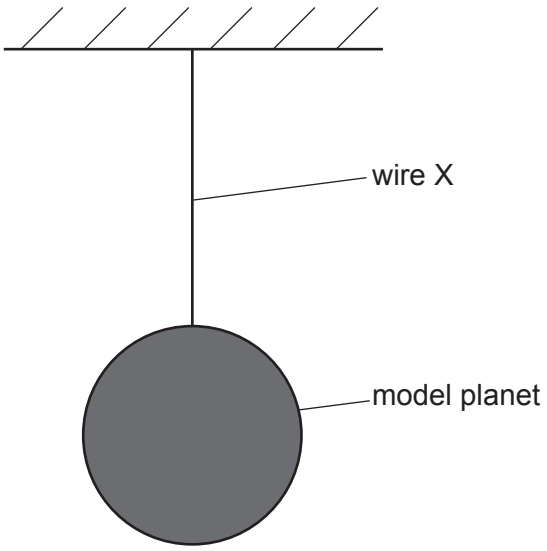

Fig. 3.1 (not to scale)

The variation with strain of the stress for wire X is shown in Fig. 3.2.

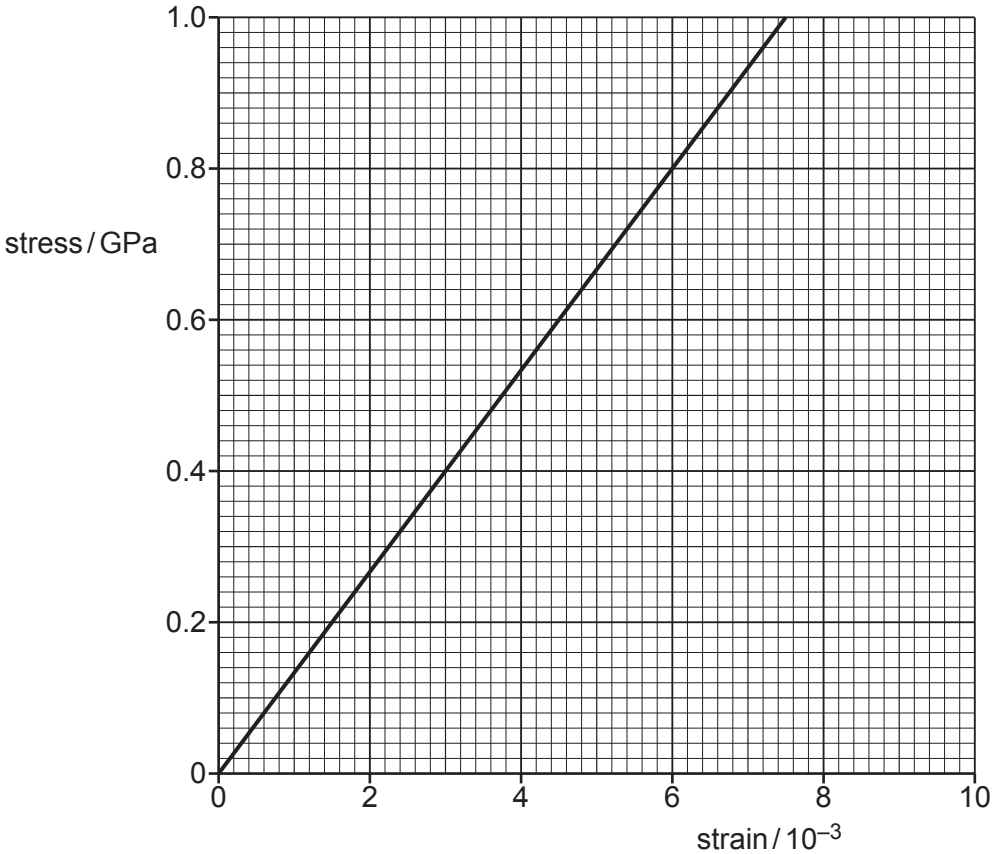

Fig. 3.2

(a) The strain in X is 5.4×10^{-3}.

(i) Use Fig. 3.2 to calculate the force exerted on the wire by the model planet.

force = ... N [3]

(ii) The elastic potential energy of X is 0.31 J.

Calculate the original length of the wire before the model planet was attached.

original length = ... m [3]

(b) Wire X is replaced by a new wire, Y, with the same original length and diameter but double the Young modulus of X. Wire Y also obeys Hooke's law.

On Fig. 3.2, draw a line representing the variation with strain of the stress for Y. [2]

[Total: 8]

4 A nucleus P undergoes α-decay to form nucleus Q.

(a) Complete the equation for this decay.

$$^{215}_{84}\text{P} \longrightarrow \,^{\_\_}_{\_\_}\text{Q} + \,^{\_\_}_{\_\_}\alpha$$ [2]

(b) **(i)** State the principle of conservation of momentum.

.....

.....

..... [2]

(ii) Before the decay, nucleus P has a speed of $3.2 \times 10^5\,\text{m}\,\text{s}^{-1}$. After the decay, nucleus Q is stationary.

Calculate the speed of the alpha particle after the decay.

speed = ... $\text{m}\,\text{s}^{-1}$ [2]

[Total: 6]

© UCLES 2024

5 **(a)** By reference to the direction of propagation of energy, state what is meant by a transverse wave.

.....

..... [1]

(b) A space telescope is designed to detect electromagnetic radiation with wavelengths in the range 12 μm to 28 μm.

State the region of the electromagnetic spectrum for this radiation.

..... [1]

(c) A detector on another space telescope detects an electromagnetic wave. The signal from the detector is transmitted to Earth and displayed on an oscilloscope as shown in Fig. 5.1. The frequency of the signal displayed on the oscilloscope is equal to the frequency of the detected electromagnetic wave.

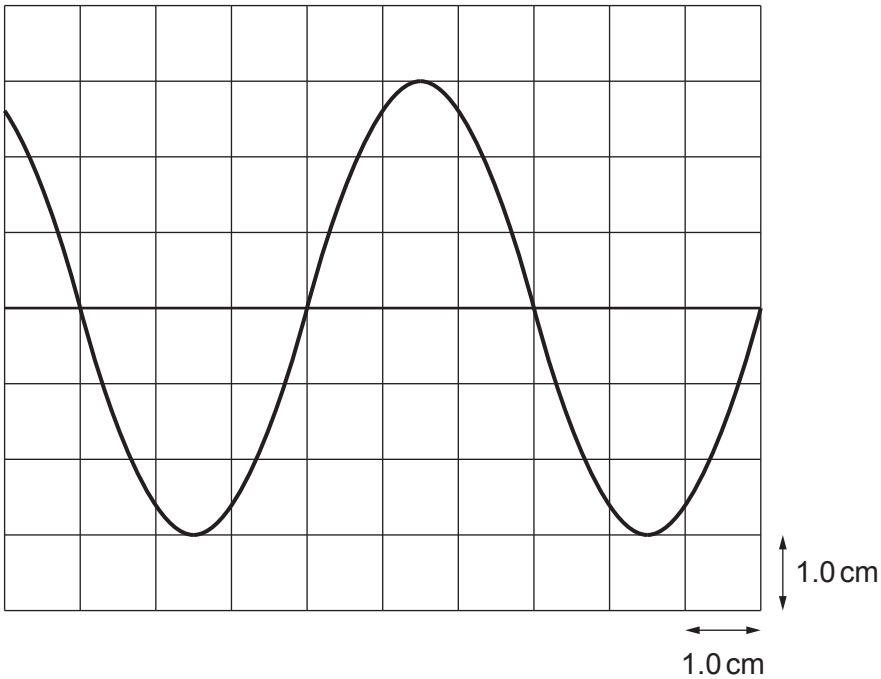

Fig. 5.1

The time-base setting on the oscilloscope is $5.0 \times 10^{-15}\,\text{s cm}^{-1}$.

Calculate the wavelength of the detected electromagnetic wave.

wavelength = ... m [3]

[Total: 5]

6 **(a)** Coherent visible light of a single frequency is incident normally on a double slit. This produces a pattern of bright and dark interference fringes on a screen, as illustrated in Fig. 6.1.

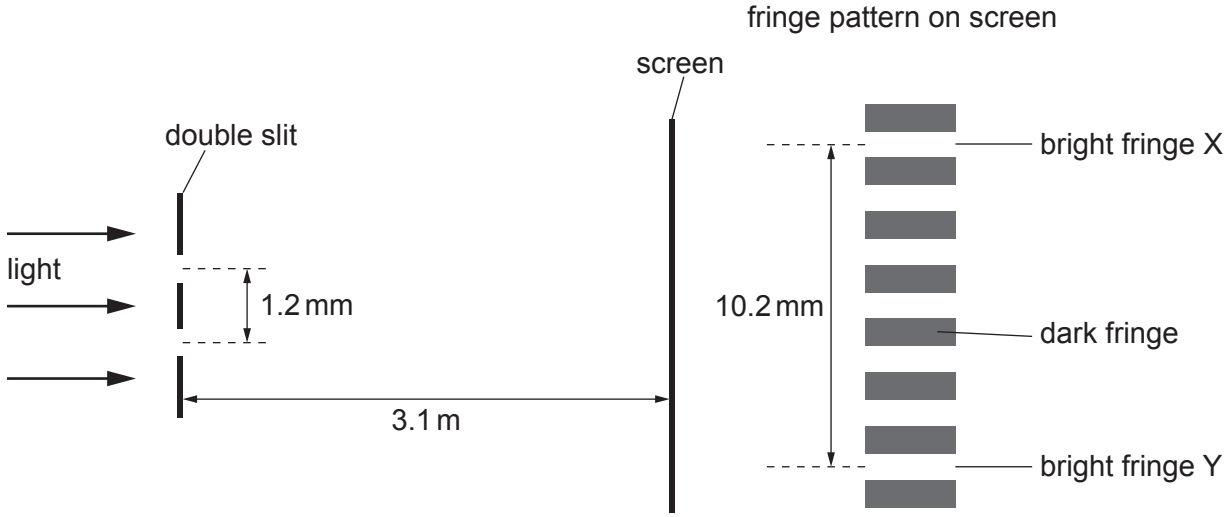

Fig. 6.1 (not to scale)

There are seven bright fringes.

(i) Explain how the pattern of bright and dark interference fringes is formed.

.....

.....

.....

.....

.....

..... [3]

(ii) The distance between the centres of bright fringe X and bright fringe Y in the pattern is 10.2 mm. The slit spacing is 1.2 mm. The distance from the slits to the screen is 3.1 m.

Calculate the wavelength of the light incident on the slits.

wavelength = ... m [3]

(iii) The light is replaced by different visible light with a shorter wavelength.

State how the new fringe separation will compare to the original fringe separation.

..... [1]

(b) A stationary wave is formed on a stretched string AB, as shown in Fig. 6.2.

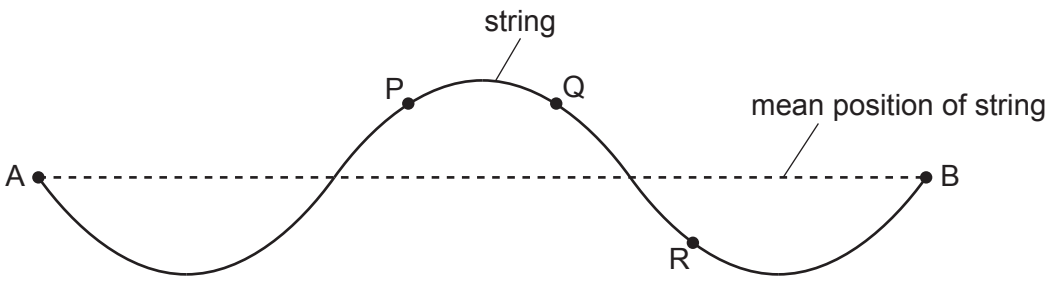

Fig. 6.2

P, Q and R are points on the string.

(i) On Fig. 6.2, draw a cross (×) to show the position of a node. [1]

(ii) State the phase difference between P and Q.

phase difference = ... ° [1]

(iii) State the phase difference between P and R.

phase difference = ... ° [1]

[Total: 10]

7 **(a)** Define electric potential difference.

.....

..... [1]

(b) A cell of electromotive force (e.m.f.) 1.8 V and internal resistance *r* is connected in parallel with a resistor of resistance 6.0 Ω and a filament lamp, as shown in Fig. 7.1.

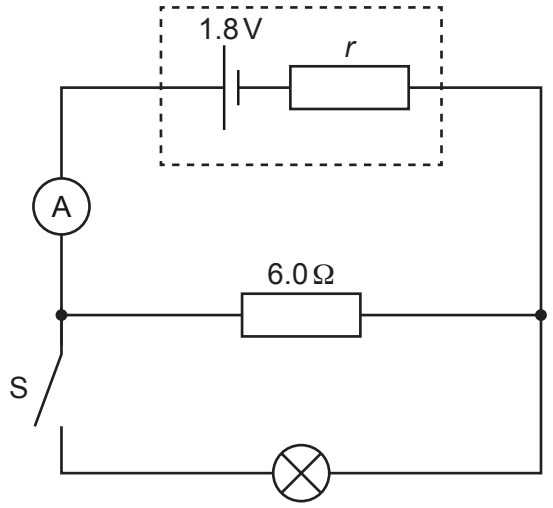

Fig. 7.1

The switch S is open. The ammeter reading is 0.25 A.

Determine the internal resistance *r* of the cell.

r = ... Ω [3]

(c) At time t_1 switch S in Fig. 7.1 is closed. Fig. 7.2 shows the variation with time t of the ammeter reading I.

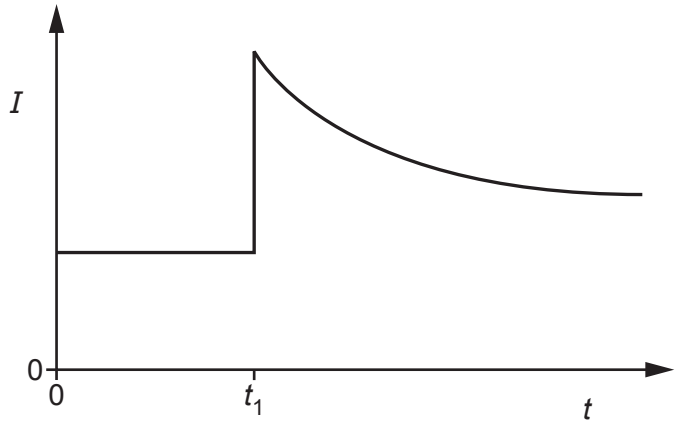

Fig. 7.2

(i) State whether the e.m.f. of the cell after t_1 is greater than, less than or the same as it was before t_1.

..... [1]

(ii) By considering the effect of the lamp on the total resistance of the circuit, explain the variation of the ammeter reading shown in Fig. 7.2.

.....

.....

.....

.....

.....

..... [3]

[Total: 8]

8 **(a)** State the name of the class (group) of fundamental particles that contains a neutrino.

..... [1]

(b) A hadron P has a charge of +1*e*, where *e* is the elementary charge. The hadron P is composed of a down antiquark and only one other quark.

(i) Identify a possible flavour for this other quark.

..... [1]

(ii) State what type of hadron is P.

..... [1]

(c) Nucleus Q undergoes radioactive decay to form nucleus R, emitting an antineutrino and another particle X, as shown in the decay equation.

$$Q \longrightarrow R + X + \overline{\nu}$$

(i) State what particle is represented by X.

..... [1]

(ii) Compare the nucleon numbers of Q and R.

..... [1]

(iii) Compare the charges of Q and R.

..... [1]

[Total: 6]

Permission to reproduce items where third-party owned material protected by copyright is included has been sought and cleared where possible. Every reasonable effort has been made by the publisher (UCLES) to trace copyright holders, but if any items requiring clearance have unwittingly been included, the publisher will be pleased to make amends at the earliest possible opportunity.

To avoid the issue of disclosure of answer-related information to candidates, all copyright acknowledgements are reproduced online in the Cambridge Assessment International Education Copyright Acknowledgements Booklet. This is produced for each series of examinations and is freely available to download at www.cambridgeinternational.org after the live examination series.

Cambridge Assessment International Education is part of Cambridge Assessment. Cambridge Assessment is the brand name of the University of Cambridge Local Examinations Syndicate (UCLES), which is a department of the University of Cambridge.

© UCLES 2024