Cambridge Assessment International Education

Cambridge International AS & A Level

CANDIDATE NAME	

CENTRE NUMBER						CANDIDATE NUMBER				

0155759762

PHYSICS **9702/22**

Paper 2 AS Level Structured Questions **February/March 2023**

1 hour 15 minutes

You must answer on the question paper.

No additional materials are needed.

INSTRUCTIONS

- Answer **all** questions.
- Use a black or dark blue pen. You may use an HB pencil for any diagrams or graphs.
- Write your name, centre number and candidate number in the boxes at the top of the page.
- Write your answer to each question in the space provided.
- Do **not** use an erasable pen or correction fluid.
- Do **not** write on any bar codes.
- You may use a calculator.
- You should show all your working and use appropriate units.

INFORMATION

- The total mark for this paper is 60.
- The number of marks for each question or part question is shown in brackets [ ].

This document has **20** pages. Any blank pages are indicated.

DC (RW/SG) 314268/2
© UCLES 2023

Data

acceleration of free fall	g	=	$9.81\ \mathrm{m\,s^{-2}}$
speed of light in free space	c	=	$3.00 \times 10^{8}\ \mathrm{m\,s^{-1}}$
elementary charge	e	=	$1.60 \times 10^{-19}\ \mathrm{C}$
unified atomic mass unit	$1\ \mathrm{u}$	=	$1.66 \times 10^{-27}\ \mathrm{kg}$
rest mass of proton	m_p	=	$1.67 \times 10^{-27}\ \mathrm{kg}$
rest mass of electron	m_e	=	$9.11 \times 10^{-31}\ \mathrm{kg}$
Avogadro constant	N_A	=	$6.02 \times 10^{23}\ \mathrm{mol^{-1}}$
molar gas constant	R	=	$8.31\ \mathrm{J\,K^{-1}\,mol^{-1}}$
Boltzmann constant	k	=	$1.38 \times 10^{-23}\ \mathrm{J\,K^{-1}}$
gravitational constant	G	=	$6.67 \times 10^{-11}\ \mathrm{N\,m^{2}\,kg^{-2}}$
permittivity of free space	ε_0	=	$8.85 \times 10^{-12}\ \mathrm{F\,m^{-1}}$
	$(\frac{1}{4\pi\varepsilon_0}$	=	$8.99 \times 10^{9}\ \mathrm{m\,F^{-1}})$
Planck constant	h	=	$6.63 \times 10^{-34}\ \mathrm{J\,s}$
Stefan–Boltzmann constant	σ	=	$5.67 \times 10^{-8}\ \mathrm{W\,m^{-2}\,K^{-4}}$

Formulae

uniformly accelerated motion	s	=	$ut + \frac{1}{2}at^2$
	v^2	=	$u^2 + 2as$
hydrostatic pressure	Δp	=	$\rho g \Delta h$
upthrust	F	=	$\rho g V$
Doppler effect for sound waves	f_o	=	$\dfrac{f_s v}{v \pm v_s}$
electric current	I	=	$Anvq$
resistors in series	R	=	$R_1 + R_2 + \ldots$
resistors in parallel	$\dfrac{1}{R}$	=	$\dfrac{1}{R_1} + \dfrac{1}{R_2} + \ldots$

© UCLES 2023

BLANK PAGE

1 **(a)** Underline **all** the SI base units in the following list.

ampere coulomb current kelvin newton [1]

(b) A toy car moves in a horizontal straight line. The displacement s of the car is given by the equation

$$s = \frac{v^2}{2a}$$

where a is the acceleration of the car and v is its final velocity.

State **two** conditions that apply to the motion of the car in order for the above equation to be valid.

1 .....

2 .....
[2]

(c) An experiment is performed to determine the acceleration of the car in **(b)**. The following measurements are obtained:

$s = 3.89\,\text{m} \pm 0.5\%$
$v = 2.75\,\text{m}\,\text{s}^{-1} \pm 0.8\%$.

(i) Calculate the acceleration a of the car.

a = ... $\text{m}\,\text{s}^{-2}$ [1]

(ii) Determine the percentage uncertainty, to two significant figures, in a.

percentage uncertainty = ...% [2]

(iii) Use your answers in **(c)(i)** and **(c)(ii)** to determine the absolute uncertainty in the calculated value of *a*.

absolute uncertainty = ... $m\,s^{-2}$ [1]

[Total: 7]

2 A motor uses a wire to raise a block, as illustrated in Fig. 2.1.

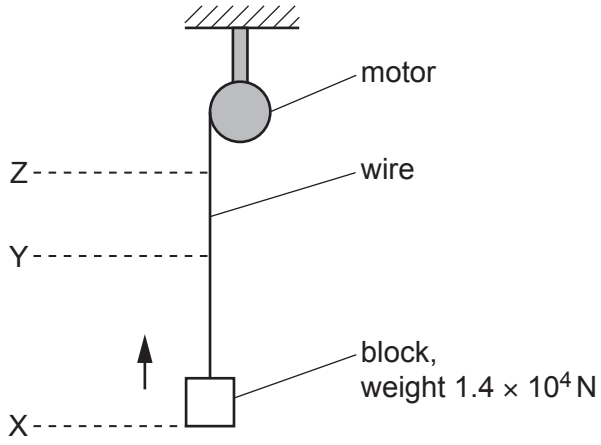

Fig. 2.1 (not to scale)

The base of the block takes a time of 0.49 s to move vertically upwards from level X to level Y at a constant speed of 0.64 m s^{-1}. During this time the wire has a strain of 0.0012. The wire is made of metal of Young modulus 2.2×10^{11} Pa and has a uniform cross-section.

The block has a weight of 1.4×10^4 N. Assume that the weight of the wire is negligible.

(a) Calculate:

(i) the cross-sectional area *A* of the wire

A = ... m^2 [2]

(ii) the increase in the gravitational potential energy of the block for the movement of its base from X to Y.

increase in gravitational potential energy = ... J [3]

(b) The motor has an efficiency of 56%.

Calculate the input power to the motor as the base of the block moves from X to Y.

input power = ... W [3]

(c) The base of the block now has a uniform deceleration of magnitude $1.3\,\mathrm{m\,s^{-2}}$ from level Y until the base of the block stops at level Z.

Calculate the tension T in the wire as the base of the block moves from Y to Z.

T = ... N [3]

(d) The base of the block is at levels X, Y and Z at times t_X, t_Y and t_Z respectively.

On Fig. 2.2, sketch a graph to show the variation with time t of the distance d of the base of the block from level X. Numerical values of d and t are not required.

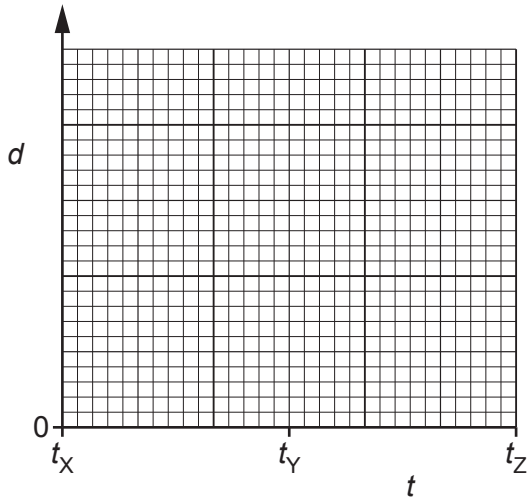

Fig. 2.2

[2]

[Total: 13]

3 A uniform beam AB is attached by a hinge to a wall at end A, as shown in Fig. 3.1.

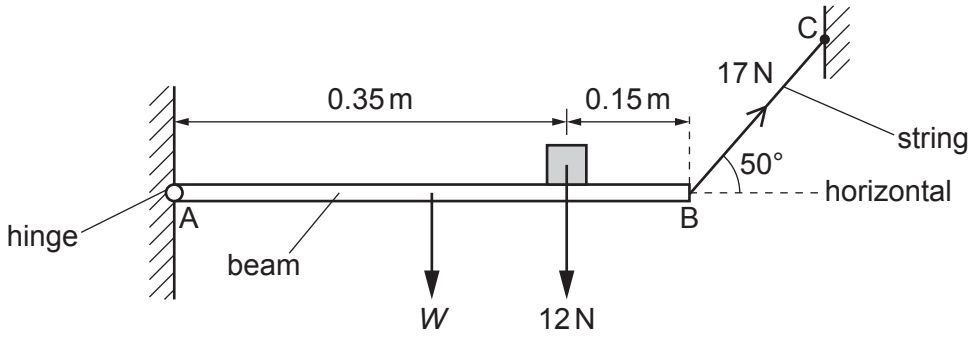

Fig. 3.1 (not to scale)

The beam has length 0.50 m and weight *W*. A block of weight 12 N rests on the beam at a distance of 0.15 m from end B.

The beam is held horizontal and in equilibrium by a string attached between end B and a fixed point C. The string has a tension of 17 N and is at an angle of 50° to the horizontal.

(a) State **two** conditions for an object to be in equilibrium.

1 .....

.....

2 .....

.....
[2]

(b) Show that the vertical component of the tension in the string is 13 N.

[1]

(c) By taking moments about end A, calculate the weight *W* of the beam.

W = ... N [2]

(d) Calculate the magnitude of the vertical component of the force exerted on the beam by the hinge.

force = ... N [1]

(e) The block is now moved closer to end A of the beam. Assume that the beam remains horizontal.

State whether this change will increase, decrease or have no effect on the horizontal component of the force exerted on the beam by the hinge.

..... [1]

[Total: 7]

4 Two blocks slide directly towards each other along a frictionless horizontal surface, as shown in Fig. 4.1. The blocks collide and then move as shown in Fig. 4.2.

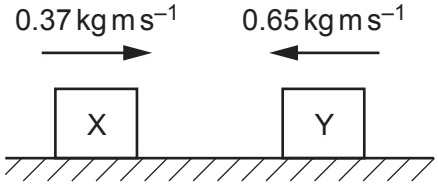

BEFORE COLLISION

Fig. 4.1

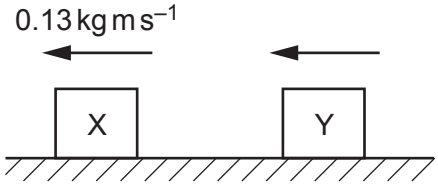

AFTER COLLISION

Fig. 4.2

Block X initially moves to the right with a momentum of $0.37\,\text{kg}\,\text{m}\,\text{s}^{-1}$. Block Y initially moves to the left with a momentum of $0.65\,\text{kg}\,\text{m}\,\text{s}^{-1}$. After the blocks collide, block X moves to the left back along its original path with a momentum of $0.13\,\text{kg}\,\text{m}\,\text{s}^{-1}$. Block Y also moves to the left after the collision.

(a) Block X has an initial kinetic energy of 0.30 J.

Calculate the mass of block X.

mass = ... kg [3]

(b) Determine the magnitude of the momentum of block Y after the collision.

momentum = ... $\text{kg}\,\text{m}\,\text{s}^{-1}$ [1]

(c) Block X exerts an average force of 7.7 N on block Y during the collision.

Calculate the time that the blocks are in contact with each other.

time = ... s [2]

[Total: 6]

5 **(a)** A microphone and cathode-ray oscilloscope (CRO) are used to analyse a sound wave of frequency 5000 Hz. The trace that is displayed on the screen of the CRO is shown in Fig. 5.1.

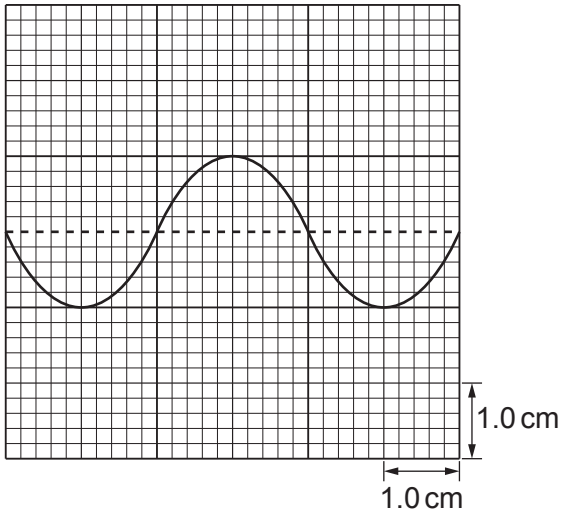

Fig. 5.1

(i) Determine the time-base setting, in $s\,cm^{-1}$, of the CRO.

time-base setting = ... $s\,cm^{-1}$ [2]

(ii) The intensity of the sound detected by the microphone is now increased from its initial value of I to a new value of $3I$. The frequency of the sound is unchanged. Assume that the amplitude of the trace on the CRO screen is proportional to the amplitude of the sound wave.

On Fig. 5.1, sketch the new trace shown on the screen of the CRO. [3]

(b) An arrangement for demonstrating interference using light is shown in Fig. 5.2.

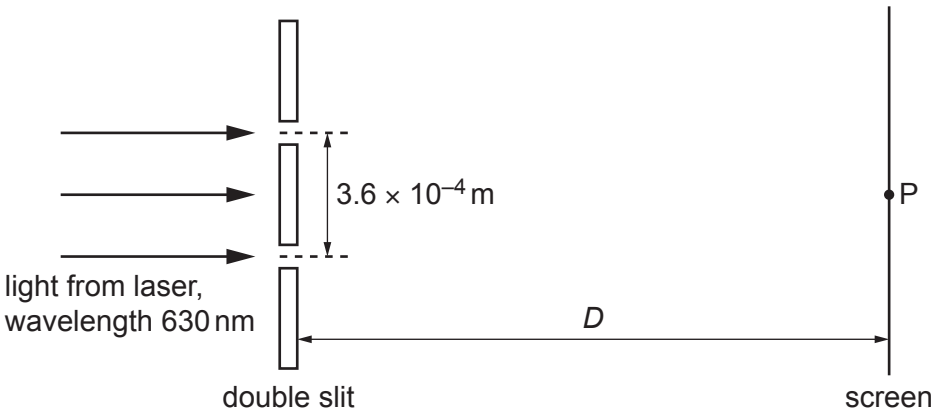

Fig. 5.2 (not to scale)

The wavelength of the light from the laser is 630 nm. The light is incident normally on the double slit. The separation of the two slits is 3.6×10^{-4} m. The perpendicular distance between the double slit and the screen is *D*.

Coherent light waves from the slits form an interference pattern of bright and dark fringes on the screen. The distance between the centres of two adjacent bright fringes is 4.0×10^{-3} m. The central bright fringe is formed at point P.

(i) Explain why a bright fringe is produced by the waves meeting at point P.

.....

..... [1]

(ii) Calculate distance *D*.

D = ... m [3]

(c) The wavelength λ of the light in **(b)** is now varied. This causes a variation in the distance *x* between the centres of two adjacent bright fringes on the screen. The distance *D* and the separation of the two slits are unchanged.

On Fig. 5.3, sketch a graph to show the variation of *x* with λ from λ = 400 nm to λ = 700 nm. Numerical values of *x* are not required.

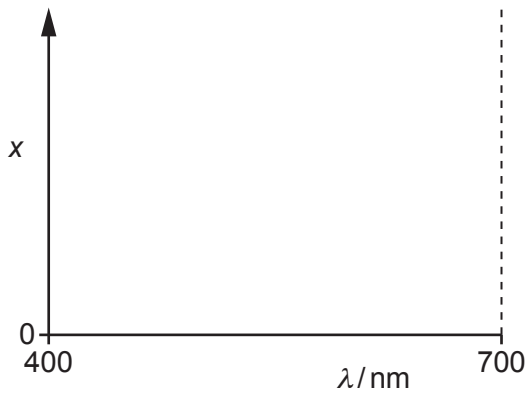

Fig. 5.3

[1]

[Total: 10]

BLANK PAGE

6 **(a)** Define the potential difference across a component.

.....

..... [1]

(b) The variation with potential difference V of the current I in a semiconductor diode is shown in Fig. 6.1.

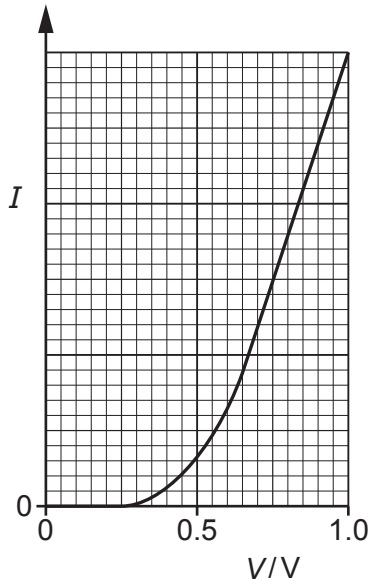

Fig. 6.1

Use Fig. 6.1 to describe qualitatively:

(i) the resistance of the diode in the range $V = 0$ to $V = 0.25\,\text{V}$

..... [1]

(ii) the variation, if any, in the resistance of the diode as V changes from $V = 0.75\,\text{V}$ to $V = 1.0\,\text{V}$.

..... [1]

(c) A battery of electromotive force (e.m.f.) 12 V and negligible internal resistance is connected to a uniform resistance wire XY, a fixed resistor and a variable resistor, as shown in Fig. 6.2.

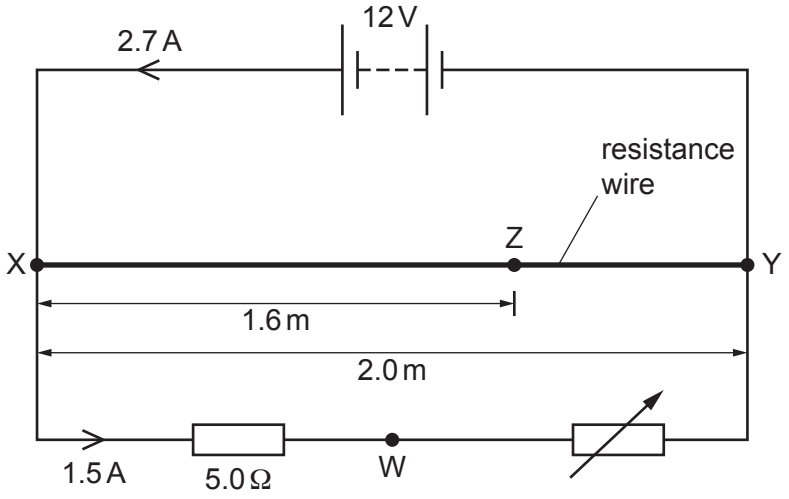

Fig. 6.2 (not to scale)

The fixed resistor has a resistance of 5.0 Ω. The current in the battery is 2.7 A and the current in the fixed resistor is 1.5 A.

(i) Calculate the current in the resistance wire.

current = ...A [1]

(ii) Determine the resistance of the variable resistor.

resistance = ... Ω [2]

(iii) Wire XY has a length of 2.0 m. Point Z on the wire is a distance of 1.6 m from point X. The fixed resistor is connected to the variable resistor at point W.

Determine the potential difference between points W and Z.

potential difference = ... V [3]

(iv) The resistance of the variable resistor is now increased.

By considering the currents in every part of the circuit, state and explain whether the total power produced by the battery decreases, increases or stays the same.

.....

.....

.....

.....

.....

..... [3]

[Total: 12]

7 **(a)** Nuclei X and Y are different isotopes of the same element.

Nucleus X is unstable and emits a β^+ particle to form nucleus Z.

By comparing the number of protons in each nucleus, state and explain whether the charge of nucleus X is less than, the same as or greater than the charge of:

(i) nucleus Y

.....

..... [1]

(ii) nucleus Z.

.....

.....

..... [2]

(b) Hadrons can be divided into two groups (classes), P and Q. Group P is baryons.

(i) State the name of group Q.

..... [1]

(ii) Describe, in general terms, the quark structure of hadrons that belong to group Q.

.....

..... [1]

[Total: 5]

BLANK PAGE

BLANK PAGE

Permission to reproduce items where third-party owned material protected by copyright is included has been sought and cleared where possible. Every reasonable effort has been made by the publisher (UCLES) to trace copyright holders, but if any items requiring clearance have unwittingly been included, the publisher will be pleased to make amends at the earliest possible opportunity.

To avoid the issue of disclosure of answer-related information to candidates, all copyright acknowledgements are reproduced online in the Cambridge Assessment International Education Copyright Acknowledgements Booklet. This is produced for each series of examinations and is freely available to download at www.cambridgeinternational.org after the live examination series.

Cambridge Assessment International Education is part of Cambridge Assessment. Cambridge Assessment is the brand name of the University of Cambridge Local Examinations Syndicate (UCLES), which is a department of the University of Cambridge.

© UCLES 2023