Cambridge Assessment International Education

Cambridge International AS & A Level

CANDIDATE NAME	

CENTRE NUMBER						CANDIDATE NUMBER				

PHYSICS **9702/33**

Paper 3 Advanced Practical Skills 1 **February/March 2021**

2 hours

You must answer on the question paper.

You will need: The materials and apparatus listed in the confidential instructions

INSTRUCTIONS

- Answer **all** questions.
- Use a black or dark blue pen. You may use an HB pencil for any diagrams or graphs.
- Write your name, centre number and candidate number in the boxes at the top of the page.
- Write your answer to each question in the space provided.
- Do **not** use an erasable pen or correction fluid.
- Do **not** write on any bar codes.
- You will be allowed to work with the apparatus for a maximum of 1 hour for each question.
- You should record all your observations in the spaces provided in the question paper as soon as these observations are made.
- You may use a calculator.
- You should show all your working and use appropriate units.

INFORMATION

- The total mark for this paper is 40.
- The number of marks for each question or part question is shown in brackets [ ].

For Examiner's Use	
1	
2	
Total	

This document has **12** pages.

DC (ST/CT) 201470/3
© UCLES 2021

You may not need to use all of the materials provided.

1 In this experiment, you will investigate the equilibrium of a wooden rod supported by a spring.

(a) **(i)** Before assembling the apparatus, measure and record the length C_o of the coiled section of the spring, as shown in Fig. 1.1.

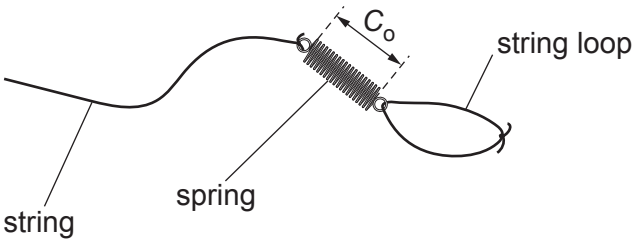

Fig. 1.1

C_o = ... cm [1]

(ii) • Assemble the apparatus as shown in Fig. 1.2 with each nail held securely in a boss.

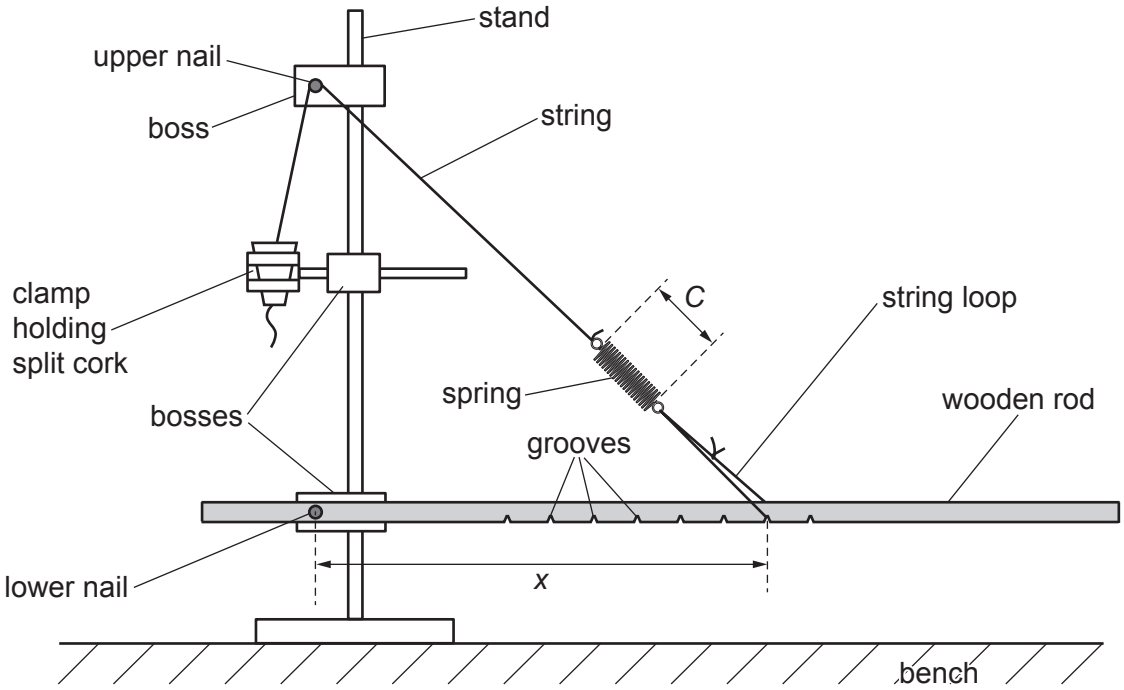

Fig. 1.2

- Adjust the bosses until the upper nail is approximately 35 cm above the bench and the lower nail is approximately 10 cm above the bench.
- Position the string loop in one of the grooves near the middle of the rod.
- Adjust the free end of the string so that the rod is parallel to the bench and then secure it in the split cork.

- Measure and record the length C of the coiled section of the spring, as shown in Fig. 1.2.

C = ... cm

- Calculate E, where $E = C - C_o$.

E = ... cm
[1]

(iii) The distance from the centre of the lower nail to the groove with the string loop in it is x. Measure and record x.

x = ... cm [1]

(b) Move the string loop into another groove and adjust the apparatus so that the rod is parallel to the bench.
Measure C and x.

Repeat until you have at least six sets of values of C and x.

Record your results in a table. Include values of E and $\frac{1}{E^4}$ in your table.

[9]

(c) **(i)** Plot a graph of $\frac{1}{E^4}$ on the y-axis against x on the x-axis. [3]

(ii) Draw the straight line of best fit. [1]

(iii) Determine the gradient and y-intercept of this line.

gradient = ...

y-intercept = ...
[2]

(d) It is suggested that the quantities E and x are related by the equation

$$\frac{1}{E^4} = ax + b$$

where a and b are constants.

Use your answers in **(c)(iii)** to determine the values of a and b.
Give appropriate units.

a = ...

b = ...
[2]

[Total: 20]

You may not need to use all of the materials provided.

2 In this experiment, you will investigate the speed of air flowing through a hole.

(a) • You are provided with a plastic bottle with the base cut off. The neck is sealed with a polythene sheet. Two lines are marked on the side of the bottle, as shown in Fig. 2.1.

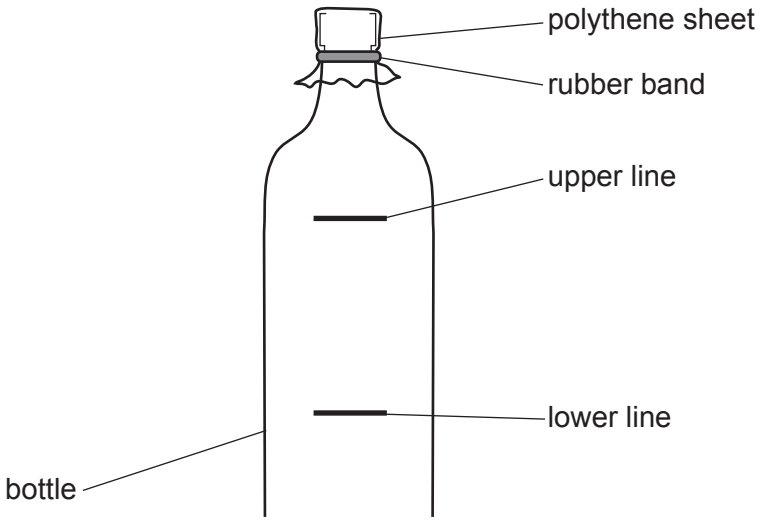

Fig. 2.1

The distance between the lines is *L,* and the diameter of the bottle where the lines are marked is *D*, as shown in Fig. 2.2.

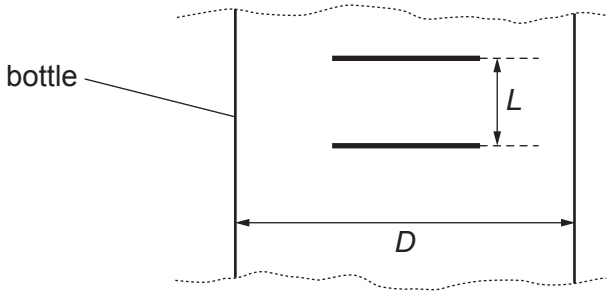

Fig. 2.2

• Measure and record *L* and *D*.

L = ... cm

D = ... cm
[2]

(b) **(i)** You have been provided with a pin and a thin nail.

- Make a hole through the polythene sheet using the pin, as shown in Fig. 2.3.

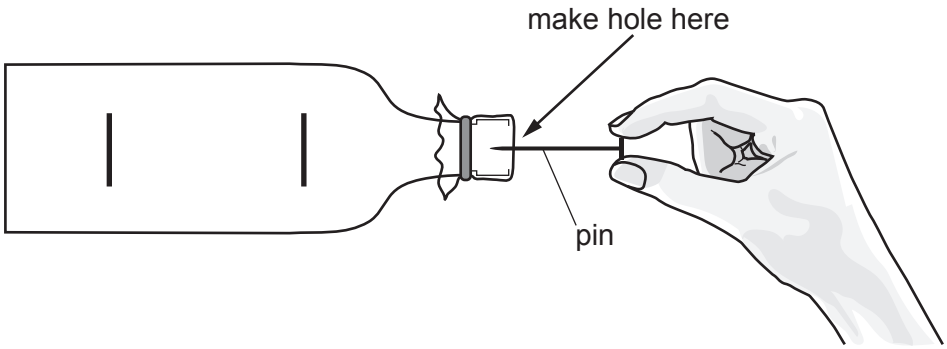

Fig. 2.3

- Measure and record the diameter *d* of the pin.

d = ... cm [1]

(ii) Estimate the percentage uncertainty in your value of *d*.
Show your working.

percentage uncertainty = ... [1]

(c) • Submerge the bottle in the bowl so that it is completely filled with water.

• Tilt the bottle until it is vertical with its lower end approximately 1 cm below the water level in the bowl, as shown in Fig. 2.4.

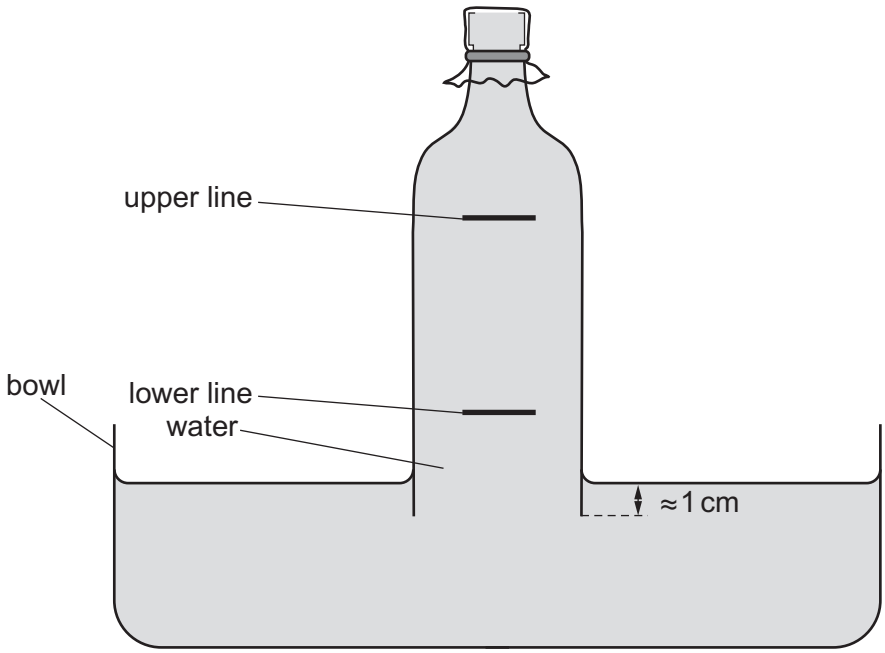

Fig. 2.4

• The water level in the bottle will fall.

Start the stopwatch when the water level reaches the upper line, and stop the stopwatch when the water level reaches the lower line.

Record the time *t* shown on the stopwatch.

t = ... [2]

(d) • Remove the bottle from the bowl.

• Push the nail through the pin-hole in the polythene to make the hole larger.

• Measure and record the diameter *d* of the nail.

d = ... cm

• Repeat **(c)**.

t = ...
[2]

(e) It is suggested that the relationship between *t* and *d* is

$$t = \frac{k}{d^2}$$

where *k* is a constant.

(i) Using your data, calculate two values of *k*.

first value of *k* = ...

second value of *k* = ...
[1]

(ii) Justify the number of significant figures you have given for your second value of *k*.

.....

.....

..... [1]

(iii) Explain whether your results support the suggested relationship.

.....

.....

..... [1]

(f) The speed S of the air passing through a hole is given by

$$S = \frac{D^2L}{k}.$$

Calculate S using your second value of k.

S = ... [1]

(g) **(i)** Describe four sources of uncertainty or limitations of the procedure for this experiment.

1 .....

.....

2 .....

.....

3 .....

.....

4 .....

.....

[4]

(ii) Describe four improvements that could be made to this experiment. You may suggest the use of other apparatus or different procedures.

1 .....

.....

2 .....

.....

3 .....

.....

4 .....

.....

[4]

[Total: 20]

Permission to reproduce items where third-party owned material protected by copyright is included has been sought and cleared where possible. Every reasonable effort has been made by the publisher (UCLES) to trace copyright holders, but if any items requiring clearance have unwittingly been included, the publisher will be pleased to make amends at the earliest possible opportunity.

To avoid the issue of disclosure of answer-related information to candidates, all copyright acknowledgements are reproduced online in the Cambridge Assessment International Education Copyright Acknowledgements Booklet. This is produced for each series of examinations and is freely available to download at www.cambridgeinternational.org after the live examination series.

Cambridge Assessment International Education is part of the Cambridge Assessment Group. Cambridge Assessment is the brand name of the University of Cambridge Local Examinations Syndicate (UCLES), which itself is a department of the University of Cambridge.

© UCLES 2021